"RE-BUILDING THE CITY'S WATER SYSTEMS FOR THE 21ST CENTURY"

Sewerage & Water Board OF NEW ORLEANS

625 ST. JOSEPH STREET
NEW ORLEANS, LA 70165 • 504-529-2837 OR 52-WATER
www.swbno.org

Addendum No. _2_

Date: 11/24/2026

Your reference is directed at **Contract Number: 2026-SWB-24 (Contract 1444)** West Power Complex Fuel Delivery System which is scheduled to open at **11:30 a.m. CST** on **January 5, 2027.**

This addendum provides for the following:

1) Drawings Volumes three (3) and four (4).

---

1. Drawings Volumes three (3) and four (4).
    - **The Prebid Meeting Date has been updated to December 8, 2026, at 11:30 am.**

The above revisions shall be incorporated in and take precedence over any conflicting part of the original proposal documents. This addendum is hereby officially made a part of the referenced proposal.

Receipt of this addendum shall be acknowledged by inserting its number and date in the space provided on the Louisiana Uniform Public Works Bid Form.

This addendum consists of one (1) page.

*** END OF ADDENDUM ***

SEWERAGE and WATER BOARD

of

NEW ORLEANS

VOLUME 3

CONTRACT DRAWINGS

OF THE

CONTRACT DOCUMENTS

FOR

CONTRACT 1444

WEST POWER COMPLEX @ CWTP

FUEL OIL DELIVERY SYSTEM

Issued for Bid

August 2026

SEWERAGE AND WATER BOARD OF NEW ORLEANS

ENGINEERING DEPARTMENT

CONTRACT 1444
WEST POWER COMPLEX AT CWP
FUEL OIL DELIVERY SYSTEM

PROJECT TEAM:

WSP USA INC.
ONE PENN PLAZA, 11TH FLOOR,
NEW YORK, NY 10119
CERTIFICATE OF REGISTRATION # EF.0000023

Infinity Engineering Consultants, LLC
Civil | Structural | Mechanical | Electrical | Marine | Transportation
Metairie, LA www.infinityec.com 504-304-0548

Jacobs

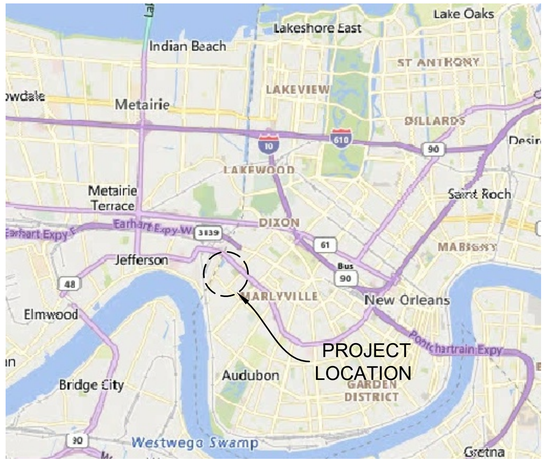

VICINITY MAP

SCALE: NTS

CARROLLTON WATER PURIFICATION PLANT
8800 S. CLAIBORNE AVENUE

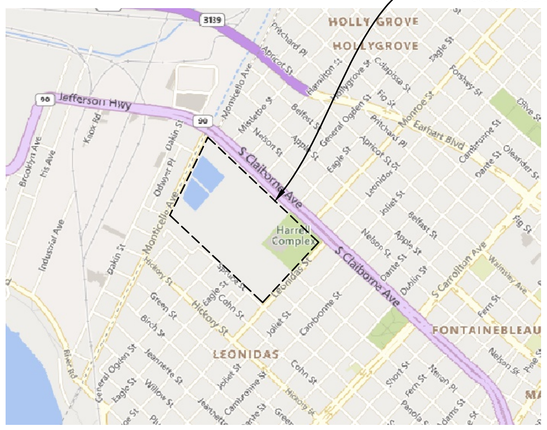

LOCATION MAP

SCALE: NTS

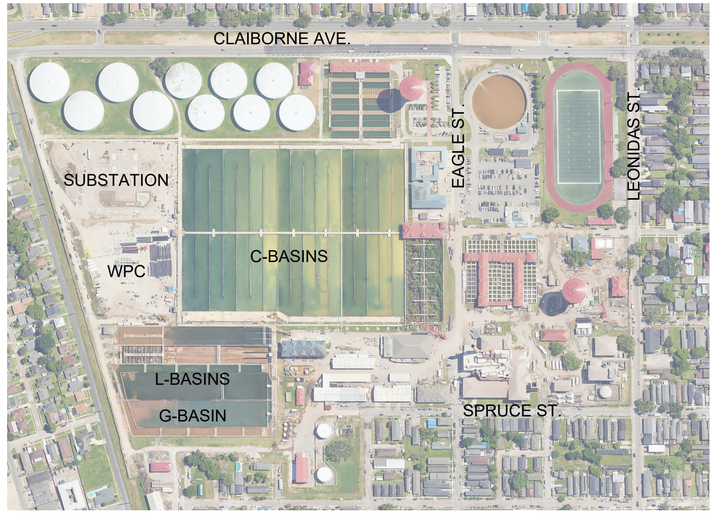

PLANT MAP

SCALE: NTS

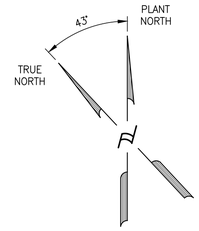

THIS ACKNOWLEDGES THAT THE ATTACHED DRAWINGS HAVE BEEN RECEIVED BY THE SEWERAGE & WATER BOARD OF NEW ORLEANS AND HEREBY FORWARDED FOR PROCUREMENT.
THE SEWERAGE & WATER BOARD OF NEW ORLEANS DOES NOT RELEASE CONSULTANT/DESIGNER FROM ANY LEGAL LIABILITY THAT MAY ARISE FROM THE BOARD'S ACCEPTANCE OR USE OF THE ATTACHED DRAWINGS FOR THEIR INTENDED PURPOSE.

GENERAL SUPERINTENDENT

REV.	DATE	DESCRIPTION	BY
0	03/11/2026	ISSUED FOR BID	LEK

LAURA ELIZABETH KELLY
License No. 39645
PROFESSIONAL ENGINEER
IN
MECHANICAL ENGINEERING
3/11/2026

WSP USA INC.
ONE PENN PLAZA, 11TH FLOOR,
NEW YORK, NY 10119
CERTIFICATE OF REGISTRATION # EF.0000023

Infinity Engineering Consultants, LLC
Civil | Structural | Mechanical | Electrical | Marine | Transportation
Metairie, LA www.infinityec.com 504-304-0548
FIRM No. LA – EF. 0003109

DATE	03/11/2026	JOB NO.	22-017
DESIGNED BY: L. KELLY			
FILE NAME: Title Sheet & Location Maps.dwg			

SEWERAGE AND WATER BOARD OF NEW ORLEANS

CONTRACT No. 1444
WEST POWER COMPLEX @ CWPT
FUEL OIL DELIVERY SYSTEM

TITLE

TITLE SHEET & LOCATION MAPS

DR.	F. CHERRY
CK:	L. KELLY
AP:	L. KELLY
LAST EDIT:	
SCALE:	AS NOTED
DATE:	03/11/2026

A/E DWG NO.
T1.00

DWG. No. 12196-W-24

SET NO: SHEET NO: 1 OF 72

BID PACKAGE - NOT FOR CONSTRUCTION

DRAWING INDEX–OUTSIDE WPC

SHEET NUMBER	SHEET TITLE
TITLE	
T1.00	TITLE SHEET & LOCATION MAPS
T2.00	DRAWING INDEX
GENERAL	
G1.00	GENERAL NOTES
G2.00	OVERALL SITE PLAN
MECHANICAL	
M1.00	MECHANICAL NOTES & LEGEND
M3–0–1	PIPING AND INSTRUMENTATION DIAGRAM LEGEND
M3–0–2	PIPING AND INSTRUMENTATION DIAGRAM LEGEND
M3–2	PIPING AND INSTRUMENTATION DIAGRAM FUEL OIL
M2.00	OVERALL PIPING PLAN
M2.01	UNDERGROUND PIPING PLAN
M2.02	UNDERGROUND PIPING PLAN
M2.03	UNDERGROUND PIPING PLAN
M2.04	UNDERGROUND PIPING PLAN
M2.05	UNDERGROUND PIPING PLAN
M2.06	UNDERGROUND PIPING PLAN
M2.07	ABOVEGROUND PIPING PLAN
M2.08	ABOVEGROUND PIPING PLAN
M2.09	ABOVEGROUND PIPING PLAN
M2.10	ABOVEGROUND PIPING PLAN
M2.11	ABOVEGROUND PIPING PLAN
M2.12	UNDERGROUND PIPING PLAN
M2.13	UNDERGROUND PIPING PLAN
M2.14	UNDERGROUND PIPING PLAN
M2.15	FUEL STORAGE CONTAINMENT PIPING PLAN
M2.16	FUEL STORAGE CONTAINMENT PIPING PLAN
M3.00	CROSS SECTIONS
M3.01	CROSS SECTIONS
M3.02	CROSS SECTIONS
M3.03	PIPING SECTIONS
M3.04	PIPING SECTIONS
M4.00	TP–05 LOCATION PLAN & DETAILS
M4.01	TP–06 LOCATION PLAN & DETAILS
M4.02	TP–07 LOCATION PLAN & DETAILS
M4.03	TP–08 LOCATION PLAN & DETAILS
M5.00	PIPE SUPPORT DETAILS
STRUCTURAL	
S00–01	STRUCTURAL GENERAL NOTES
S00–02	STRUCTURAL STEEL GENERAL NOTES
S00–03	STRUCTURAL STEEL GENERAL NOTES
S03–07–01	STRUCTURAL FUEL FORWARDING PUMP PLATFORM FRAMING PLAN
S04–07–01	STRUCTURAL FUEL FORWARDING PUMP PLATFORM SECTIONS
S05–00–01	STRUCTURAL HORIZONTAL AND VERTICAL BRACING CONNECTION DETAILS
S05–00–02	STRUCTURAL GUARDRAIL DETAILS
S05–00–03	STRUCTURAL GRATING DETAILS
S05–00–04	STRUCTURAL LADDER DETAILS
ELECTRICAL	
E01–40	ONE LINE DIAGRAM MCC – G3/G4 & FUEL FORWARDING SKID
E13–20	BLOCK DIAGRAM FUEL OIL LEAK DETECTION SYSTEM
E1.00	GENERAL NOTES
E1.10	GENERAL LEGEND & ABBREVIATIONS
E3.00	ELECTRICAL KEY PLAN
E3.10	ELECTRICAL PLAN 1
E3.20	ELECTRICAL PLAN 2
E3.30	ELECTRICAL PLAN 3
E3.40	ELECTRICAL PLAN 4
E3.50	ELECTRICAL PLAN 5
E6.00	CONDUIT–CABLE SCHEDULE

DRAWING INDEX–INSIDE WPC

SHEET NUMBER	SHEET TITLE
P001	P&ID LEGEND
P550	FUEL OIL
P080	SEQUENCE OF OPERATIONS
M110	ABOVEGROUND PIPING KEY PLAN
M111	ABOVEGROUND PLAN – WPCAUX
M500	MECHANICAL DETAILS
M601	EQUIPMENT SCHEDULE
M603	PIPING SPECIFICATION
IC001	NETWORK SYMBOLS AND LEGENDS
IC100	NETWORK OVERVIEW
IC700	ELECTRICAL DISTRIBUTION
IC702	FIBER COMMUNICATION DETAILS
IC711	GROUNDING AND BONDING DETAIL
IC712–IC715	I&C STANDARD DETAILS

REV.	DATE	DESCRIPTION	BY
0	03/11/2026	ISSUED FOR BID	LEK

STATE OF LOUISIANA
LAURA LYMAN KELLY
License No. 59645
PROFESSIONAL ENGINEER
IN
MECHANICAL ENGINEERING
3/11/2026

WSP USA INC.
ONE PENN PLAZA, 4TH FLOOR,
NEW YORK, NY 10119
CERTIFICATE OF REGISTRATION # EF.0000923

FIRM No: LA – EF. 0003109
Infinity Engineering Consultants, LLC
IEC Project No. 21-017
Civil | Structural | Mechanical | Electrical | Marine | Transportation
Metairie, LA www.infinityec.com 504-304-0548

DATE	03/11/2026	JOB NO.	22-017

DESIGNED BY: L. KELLY
FILE NAME: Drawing Index.dwg

SEWERAGE AND WATER BOARD OF NEW ORLEANS

CONTRACT No. 1444
WEST POWER COMPLEX @ CWPT
FUEL OIL DELIVERY SYSTEM

TITLE

DRAWING INDEX

DR:	Q. VU
CK:	L. KELLY
AP:	L. KELLY
LAST EDIT:	
SCALE:	AS NOTED
DATE:	03/11/2026

A/E DWG NO.: T2.00

DWG. No. 12196-W-24

SET NO: SHEET NO: 2 OF 72

BID PACKAGE - NOT FOR CONSTRUCTION

1.0 ENGINEERING LAYOUT

1.1 THE CONTRACTOR SHALL BE RESPONSIBLE TO VERIFY THE PROJECT TEMPORARY BENCH MARKS SHOWN ON PLAN WITH THE PERMANENT BENCH MARK INDICATED ON THE INDEX SHEET.

1.2 THE CONTRACTOR SHALL BE RESPONSIBLE FOR LAYING OUT THE WORK AND VERIFYING ALL MEASUREMENTS, EXISTING ELEVATIONS, AND GRADES PRIOR TO BEGINNING OF CONSTRUCTION. IT SHALL BE THE RESPONSIBILITY OF THE CONTRACTOR TO ESTABLISH THE PROJECT CENTERLINE AND ADDITIONAL TEMPORARY BENCH MARKS FOR CONSTRUCTION PURPOSES BEFORE DESTROYING EXISTING MONUMENTS/NAILS/CROSS CUTS, ETC..

1.3 THE LINES AND GRADES SHOWN ON THE PLANS MAY BE VARIED SLIGHTLY BY THE ENGINEER IN THE FIELD IF CONDITIONS JUSTIFY SUCH A VARIATION. THE CONTRACTOR SHALL NOT BE ENTITLED TO AN EXTRA PAYMENT OTHER THAN WHATEVER CHANGE IN CONTRACT QUANTITIES IS INVOLVED.

1.4 THE EXISTING PLAN IS DOCUMENTED ON THE DRAWINGS IN ACCORDANCE WITH A LIMITED NUMBER OF AVAILABLE ORIGINAL CONSTRUCTION DRAWINGS AND FIELD INVESTIGATIONS. VARIANCE OF ACTUAL EXISTING CONDITIONS FROM THOSE ILLUSTRATED ON THESE DOCUMENTS MAY OCCUR. THE GENERAL CONTRACTOR SHALL VERIFY EXISTING CONDITIONS PRIOR TO COMMENCING WORK AND REPORT ANY AND ALL DISCREPANCIES TO THE OWNER OR OWNER'S REPRESENTATIVE.

2.0 UTILITIES

2.1 IT SHALL BE THE RESPONSIBILITY OF THE CONTRACTOR TO VERIFY LOCATION AND DEPTH OF ALL EXISTING UTILITIES BEFORE STARTING CONSTRUCTION. THE SEWERAGE AND WATER BOARD IS NOT RESPONSIBLE FOR ACCURACY OF THE LOCATION OF THESE UTILITIES SHOWN ON THE PLANS. THE CONTRACTOR IS CAUTIONED THAT MANY OF THE UNDERGROUND UTILITY PIPES, LINES, CONDUITS, CABLES, ETC., ARE LOCATED IMMEDIATELY BELOW THE EXISTING GRADE.

2.2 THE CONTRACTOR SHALL BE RESPONSIBLE FOR DAMAGE TO EXISTING UTILITIES WHICH OCCURS DURING CONSTRUCTION AND SHALL IMMEDIATELY REPORT ANY DAMAGE TO THE UTILITY ENTITIES. ALL REPAIRS OF THE DAMAGED UTILITIES SHALL BE DONE BY THE RESPECTIVE UTILITY ENTITY, EXCEPT S&WB POWER FEEDER, WHICH SHALL BE REPAIRED BY THE CONTRACTOR. ALL REPAIR COSTS SHALL BE BORNE BY THE CONTRACTOR.

2.3 ALL PRIVATELY OWNED UTILITY MANHOLES AND OTHER STRUCTURES WILL BE ADJUSTED BY THE UTILITY COMPANIES. IT SHALL BE THE RESPONSIBILITY OF THE CONTRACTOR TO CONTACT THE UTILITY COMPANIES AND REQUEST THE NECESSARY ADJUSTMENTS. THE ABOVE REQUEST SHALL BE MADE AT LEAST 2 WEEKS PRIOR TO CONSTRUCTION IN AREA OF CONFLICT TO ALLOW THE REQUIRED UTILITY COMPANY SUFFICIENT TIME FOR PERFORMING THE WORK.

3.0 SEWERAGE & WATER BOARD ITEMS

3.1 CONTRACTOR SHALL BE AWARE THAT THE CARROLLTON WATER TREATMENT PLANT IS A FULLY OPERATIONAL PLANT WHOSE OPERATIONS MUST BE MAINTAINED AT ALL TIMES. SHOULD ANY TEMPORARY SHUT DOWNS BE REQUIRED TO COMPLETE THE WORK SPECIFIED, APPROVAL FROM THE OWNER WILL BE PROVIDED IN WRITING.

3.2 THE CONTRACTOR SHALL BE AWARE THAT THE OWNER HAS THE SOLE DISCRETION TO ALLOW ANY TEMPORARY SHUT DOWN TO PLANT OPERATIONS.

3.3 THE OWNER WILL WORK WITH THE CONTRACTOR TO THE GREATEST EXTENT POSSIBLE TO ALLOW FOR ANY TEMPORARY SHUT DOWNS. THERE WILL BE NO ADDITIONAL COST INCURRED TO THE OWNER SHOULD A SHUT DOWN NOT BE ALLOWED AT A TIME CONDUCIVE TO THE CONTRACTOR'S SCHEDULE.

3.4 CONTRACTOR SHALL COORDINATE AND COMPLY WITH ALL OWNER REQUIREMENTS FOR SITE ACCESS AND PLANT OPERATIONS THROUGHOUT CONSTRUCTION.

3.5 STAGING AREAS SHALL BE COORDINATED WITH OWNER PRIOR TO MOBILIZATION OF ANY MATERIAL, EQUIPMENT, PERSONNEL, ETC. OWNER MAY REQUIRE THE CONTRACTOR TO RELOCATE STORED MATERIALS THAT ARE IN CONFLICT WITH PLANT OPERATIONS DURING CONSTRUCTION, AT NO ADDITIONAL COST TO THE OWNER.

3.6 AT NO TIME DURING CONSTRUCTION SHALL THE CONTRACTOR IMPEDE ACCESS TO ANY BUILDINGS, ROADS, STRUCTURES, PIPING, TRANSFORMERS, RAILS, ETC IN AREAS NOT DESIGNATED AS A STAGING AREA WITHOUT PRIOR OWNER CONSENT.

3.7 DESIGN AND CONSTRUCTION SHALL COMPLY WITH THE PROJECT SPECIFICATIONS, THESE GENERAL NOTES, AND ALL CURRENT VERSIONS OF THE APPLICABLE FEDERAL, STATE, AND LOCAL CODES. CONTRACTOR SHALL NOTIFY ENGINEER OF ANY DEFICIENCIES OR CONFLICTS PRIOR TO THE COMPLETION OF WORK.

3.8 ALL WORK TO BE PERFORMED IN ACCORDANCE WITH THE CURRENT GENERAL SPECIFICATIONS AND THE STANDARD DRAWINGS OF THE S&WB OF NEW ORLEANS, LOUISIANA EXCEPT WHERE OTHERWISE NOTED IN THE CONSTRUCTION DOCUMENTS.

3.9 THE LOCATION OF EXISTING UTILITIES SHOWN ARE APPROXIMATE. THE CONTRACTOR SHALL VERIFY THE SAME AND SHALL TAKE NECESSARY PRECAUTIONS TO PROTECT THEM.

3.10 THE CONTRACTOR SHALL VERIFY ELEVATION OF EXISTING INVERTS THAT ARE A PART OF THIS JOB. PRIOR TO INSTALLING NEW UTILITY, CONTRACTOR SHALL REPORT ANY DISCREPANCIES TO THE ENGINEER.

3.11 ALL CHANGES FROM THESE DRAWINGS MUST BE APPROVED BY THE S&WB PRIOR TO BEGINNING THE CONSTRUCTION WITH WHICH THEY ARE CONCERNED.

3.12 THE CONTRACTOR SHALL NOTIFY THE CHIEF OF ENGINEERING OF THE S&WB IN WRITING NOT LESS THAN THREE (3) NOR MORE THAN TEN (10) WORKING DAYS IN ADVANCE OF STARTING THE CONSTRUCTION.

3.13 BEFORE FINAL INSPECTION OF THE WORK, THE CONTRACTOR SHALL SUBMIT AN "AS-BUILT" DRAWING TO THE S&WB SHOWING CHANGES IN LINE OR GRADE FROM THE ORIGINAL DRAWINGS.

3.14 THE CONTRACTOR IS HEREBY ADVISED THAT CONTINUOUS OPERATION OF THE DRAINAGE, SEWER, POWER AND WATER SYSTEMS ARE VITAL TO THE HEALTH, SAFETY AND WELFARE OF THE CITY OF NEW ORLEANS. THE CONTRACTOR SHALL PERFORM NO WORK OR CAUSE ANY SYSTEM OUTAGE WHICH MAY JEOPARDIZE THE OPERATION OF THE DRAINAGE, SEWER, POWER AND WATER SYSTEM. AS SUCH, THE SWBNO POWER DISPATCHER ON DUTY WILL HAVE FULL AUTHORITY TO DENY ANY NEW OUTAGE REQUESTS OR REQUIRE THE RETURN INTO SERVICE, ANY SWBNO POWER CABLES, WHICH MAY DELAY THE PROGRESS OF THE WORK.

3.15 FEEDER OUTAGES ARE REQUIRED FOR SAFETY OF THE PERSONNEL AND EQUIPMENT IN ANY AREAS WHERE THE NEW CONSTRUCTION COMES WITHIN 10 FEET OF SWBNO UNDERGROUND OR AERIAL MEDIUM VOLTAGE POWER CABLES. CONTRACTOR SHALL FOLLOW ELECTRICAL SYSTEM OUTAGE PROCEDURES PER CONTRACT DOCUMENTS.

3.16 THE CONTRACTOR IS REQUIRED TO INFORM CENTRAL CONTROL BY PHONE (504-865-0575) AND THE ASSIGNED PROJECT PM IMMEDIATELY, IF ANY EXISTING SWBNO CABLES OR OWNER PROPERTY ARE DAMAGED OR ASSUMED DAMAGED IN CONNECTION WITH THIS PROJECT. CONTRACTOR SHALL PAY FOR ALL CABLE AND /OR ELECTRICAL EQUIPMENT REPAIRS RESULTING FROM THE WORK PERFORMED UNDER THIS CONTRACT.

3.17 CONTRACTOR SHALL PROTECT ALL EXISTING STRUCTURES AND PIPING TO REMAIN AGAINST DAMAGE THROUGHOUT CONSTRUCTION. ALL EXISTING IMPROVEMENTS ARE TO REMAIN UNLESS OTHERWISE NOTED.

3.18 CONTRACTOR SHALL NOTIFY OWNER OF ANY DEFECTS AND/OR DAMAGED/DECAYING MATERIALS FOUND IN THE EXISTING STRUCTURES OR WORK PRIOR TO ENCLOSING REQUIRED CONSTRUCTION.

3.19 HEAVY EQUIPMENT SHALL BE MATTED AND SHALL NOT BE OPERATED WITHIN 30' OF ANY STRUCTURE TANK WALLS.

3.20 CONTRACTOR SHALL COORDINATE HIS WORK LEADING UP TO AND DURING SAID CABLE OUTAGES WITH THE BOARD REPRESENTATIVE WHO SHALL BE GIVEN (1) WEEK ADVANCED NOTICE. ANY ELECTRICAL CLEARANCES REQUIRING POWER CABLES AND BREAKER OUTAGES SHALL BE SUBMITTED TO THE FOLLOWING EMAIL: FEEDERREQUEST@SWBNO.ORG FOR REVIEW.

4.0 TRAFFIC CONTROL

4.1 PRIOR TO THE START OF CONSTRUCTION, THE CONTRACTOR SHALL SUBMIT TO THE CITY TRAFFIC ENGINEER FOR REVIEW AND APPROVAL A COMPLETE CONSTRUCTION SIGNAGE, TRAFFIC MAINTENANCE, AND PUBLIC SAFETY PLAN, PER SECTION C129 OF THE GENERAL SPECIFICATIONS, WHICH, AT A MINIMUM, INCLUDE THE FOLLOWING:

A. A PLAN FOR THE PROPOSED ROUTE ON WHICH CONSTRUCTION MATERIALS AND EQUIPMENT ARE TO BE TRANSPORTED TO OR FROM THE CONSTRUCTION SITE.

B. THE NAME AND TELEPHONE NUMBER OF THE RESPONSIBLE PERSON IN CHARGE OF THE PROJECT.

5.0 GENERAL

5.1 CONTRACTOR SHALL DEVELOP AND SUBMIT SITE-SPECIFIC SAFETY AND HEALTH PLAN, TO INCLUDE SAFE WORK PRACTICES FOR REVIEW.

5.2 SITE ACCESS AND LAY DOWN AREAS SHALL BE DIRECTED BY THE OWNER. THE CONTRACTOR SHALL BE RESPONSIBLE FOR SAFETY PRECAUTIONS, MEANS, METHODS, TECHNIQUES, SEQUENCES, PROCEDURES, ETC. REQUIRED FOR PERFORMANCE OF THE WORK.

5.3 THE CONTRACTOR SHALL BE RESPONSIBLE FOR ALL LAYOUT AND SURVEYING REQUIRED FOR THE CONSTRUCTION AS SHOWN ON THE DRAWINGS. DRAWINGS SHALL NOT BE SCALED FOR CONSTRUCTION PURPOSES. PROVIDED RECORD DRAWINGS AND BACKGROUNDS UTILIZED FOR PREPARATION OF THESE PLANS HAVE BEEN SCALED AND ROTATED TO BEST FIT EXISTING SITE CONDITIONS. FIELD VERIFICATION OF ALL STRUCTURES AND DIMENSIONS SHALL BE DONE PRIOR TO FABRICATION OF ANY ASPECT OF THE REQUIRED WORK. ALL ELEVATIONS SHOWN REFER TO N.G.V.D. = NATIONAL GEODETIC VERTICAL DATUM = 0.00 FT. CONTRACTOR SHALL BE RESPONSIBLE TO VERIFY ALL DIMENSIONS AND ELEVATIONS SHOWN ON THE DRAWINGS PRIOR TO FABRICATION. NOTIFY ENGINEER WITH ANY DISCREPANCIES.

5.4 CONTRACTOR SHALL BE RESPONSIBLE FOR ALL TEMPORARY CONSTRUCTION SERVICES, INCLUDING TEMPORARY LIGHTING DURING CONSTRUCTION.

5.5 CONTRACTOR SHALL BE RESPONSIBLE FOR MAINTAINING ALL SERVICES DURING CONSTRUCTION. ANY PRIVATE UTILITY AND OTHER CONCERNED AGENCIES SHALL BE CONTACTED AT LEAST 72 HOURS IN ADVANCE,

5.6 CONTRACTOR SHALL BE RESPONSIBLE TO MAINTAIN TEMPORARY DRAINAGE WITHIN THE PROJECT AREA DURING CONSTRUCTION. CONTRACTOR SHALL NOT IMPEDE EXISTING OR ANY REQUIRED DRAINAGE DURING RAINSTORMS OR WHEN A STORM IS IMMINENT WITHIN THE CONSTRUCTION SITE.

5.7 CONTRACTOR SHALL PROVIDE THE OWNER AND ENGINEER THE NAMES, PHONE NUMBERS, AND EMAIL ADDRESSES OF PERSONNEL WHO ARE AVAILABLE ON A 24 HOUR BASIS FOR REMOVING ANY TEMPORARY IMPEDIMENT TO DRAINAGE OR WATER SERVICES DURING CONSTRUCTION.

5.8 CONTRACTOR SHALL BE RESPONSIBLE FOR HOUSEKEEPING OF THE PROJECT SITE AND ALL ACCESS ROADS ON A DAILY BASIS AND SHALL KEEP THE AREA CLEAN AND FREE OF ALL TRASH AND DEBRIS.

5.9 CONSTRUCTION TRAFFIC CONTROL SIGNS, BARRICADES, WARNING LIGHTS, DEVICES AND METHODS, SHALL COMPLY WITH MANUAL OF UNIFORM TRAFFIC CONTROL DEVICES AND THESE CONTRACT DOCUMENTS, UNLESS OTHERWISE NOTED IN THE FIELD BY THE OWNER.

5.10 NO SIGNS OR SIGNALS SHALL BE REMOVED WITHOUT THE APPROVAL OF THE OWNER. THE CONTRACTOR ACCEPTS ALL RESPONSIBILITY DURING THE TIME OF REMOVAL. THE CONTRACTOR MUST NOTIFY THE OWNER IN WRITING TEN (10) WORKING DAYS PRIOR TO THE REMOVAL OF ANY TRAFFIC CONTROL DEVICES.

5.11 ALL EQUIPMENT OR MATERIALS HAULED TO OR FROM THE CONSTRUCTION SITE WILL BE BY A ROUTE APPROVED OR DESIGNATED BY THE CITY OF NEW ORLEANS, DEPARTMENT OF PUBLIC WORKS TRAFFIC DIVISION PRIOR TO THE START OF CONSTRUCTION.

5.12 THE CONTRACTOR SHALL BE RESPONSIBLE TO DESIGN, PROVIDE, INSTALL AND MAINTAIN SHEETING, SHORING, BRACING, FALSEWORK, ETC REQUIRED TO COMPLETE THE WORK IN A CONTINUOUS SAFE MANNER. THE CONTRACTOR SHALL ASSUME ALL RESPONSIBILITY FOR THE STABILITY AND ADEQUACY OF ALL DESIGNED SYSTEMS CONSTRUCTED AND ALL COSTS AND DAMAGES RESULTING FROM ANY FAILURE THEREOF.

5.13 TRACKED CONSTRUCTION EQUIPMENT WHICH IS NOT ON MATS SHALL NOT BE ALLOWED ON EXISTING STREETS OR PAVED CONSTRUCTION ACCESS AREAS.

5.14 CONTRACTOR SHALL BE RESPONSIBLE TO REPAIR DAMAGES AS A RESULT OF CONSTRUCTION, INCLUDING DEMOLITION ACTIVITIES.

5.15 PRIOR TO STORMS, CONTRACTOR SHALL BE RESPONSIBLE FOR SECURING CONSTRUCTION MATERIALS, EQUIPMENT, AND TEMPORARY STRUCTURES. CONTRACTOR SHALL BE ABLE TO DROP THE BOOM OF ANY CRANE ON SHORT NOTICE IN THE EVENT OF A SEVERE STORM.

6.0 ENVIRONMENTAL PROTECTION

6.1 THE CONTRACTOR SHALL COMPLY WITH FEDERAL, STATE AND LOCAL LAWS AND REGULATIONS CONTROLLING POLLUTION OF THE ENVIRONMENT, INCLUDING AIR, WATER AND NOISE. THE CONTRACTOR SHALL TAKE PRECAUTIONS TO PREVENT POLLUTION OF WATERS WITH FUELS, OILS, ASPHALTS, CHEMICALS OR OTHER HARMFUL MATERIALS AND TO PREVENT POLLUTION OF THE ATMOSPHERE FROM PARTICULATE AND GASEOUS MATTER.

A. THE CONTRACTOR SHALL MAINTAIN AND OPERATE EQUIPMENT TO MINIMIZE NOISE, ENGINES SHALL BE EQUIPPED WITH PROPERLY FUNCTIONING MUFFLERS. THE CONTRACTOR SHALL LIMIT ACTIVITY NEAR NOISE SENSITIVE AREAS, SUCH AS CHURCHES, HOSPITALS AND SCHOOLS, SO NORMAL ACTIVITIES ARE NOT UNDULY DISRUPTED.

B. THE CONTRACTOR SHALL TAKE REASONABLE MEASURES TO PREVENT UNNECESSARY DUST. SURFACES SUBJECT TO DUSTING SHALL BE KEPT MOIST WITH WATER OR BY APPLICATION OF CHEMICAL DUST SUPPRESSANT. DUSTY MATERIALS STORED OR IN TRANSIT SHALL BE COVERED TO PREVENT THE DUST FROM BLOWING.

C. CONTRACTOR SHALL PROTECT SWBNO PROCESS FROM CONTAMINATION BY CONSTRUCTION ACTIVITIES.

D. NO FUELED EQUIPMENT, OR FLUID OF ANY KIND OTHER THAN WATER, IS ALLOWED ON TOP OF C-BASIN ELEVATED CONCRETE WALKWAY.

REV.	DATE	DESCRIPTION	BY
0	03/11/2026	ISSUED FOR BID	LEK

STATE OF LOUISIANA
LAURA EYMAN KELLY
License No. 59645
PROFESSIONAL ENGINEER
IN
MECHANICAL ENGINEERING
3/11/2026

wsp USA Inc.
ONE PENN PLAZA 11TH FLOOR
NEW YORK, NY 10119
CERTIFICATE OF REGISTRATION # EF.0000623

FIRM No LA - EF. 0003109
Infinity Engineering Consultants, LLC
Civil | Structural | Mechanical | Electrical | Marine | Transportation
Metairie, LA www.infinityec.com 504-304-0548

DATE	03/11/2026	JOB NO.	22-017

DESIGNED BY: L. KELLY
FILE NAME: G1.00 GENERAL NOTES.dwg

SEWERAGE AND WATER BOARD OF NEW ORLEANS

CONTRACT No. 1444
WEST POWER COMPLEX @ CWPT
FUEL OIL DELIVERY SYSTEM

GENERAL

GENERAL NOTES

DR:	F. CHERRY
CK:	L. KELLY
AP:	L. KELLY
LAST EDIT:	
SCALE:	AS NOTED
DATE:	03/11/2026

A/E DWG NO.
G1.00

DWG. No. 12196-W-24

SET NO: SHEET NO: 3 OF 72

BID PACKAGE - NOT FOR CONSTRUCTION

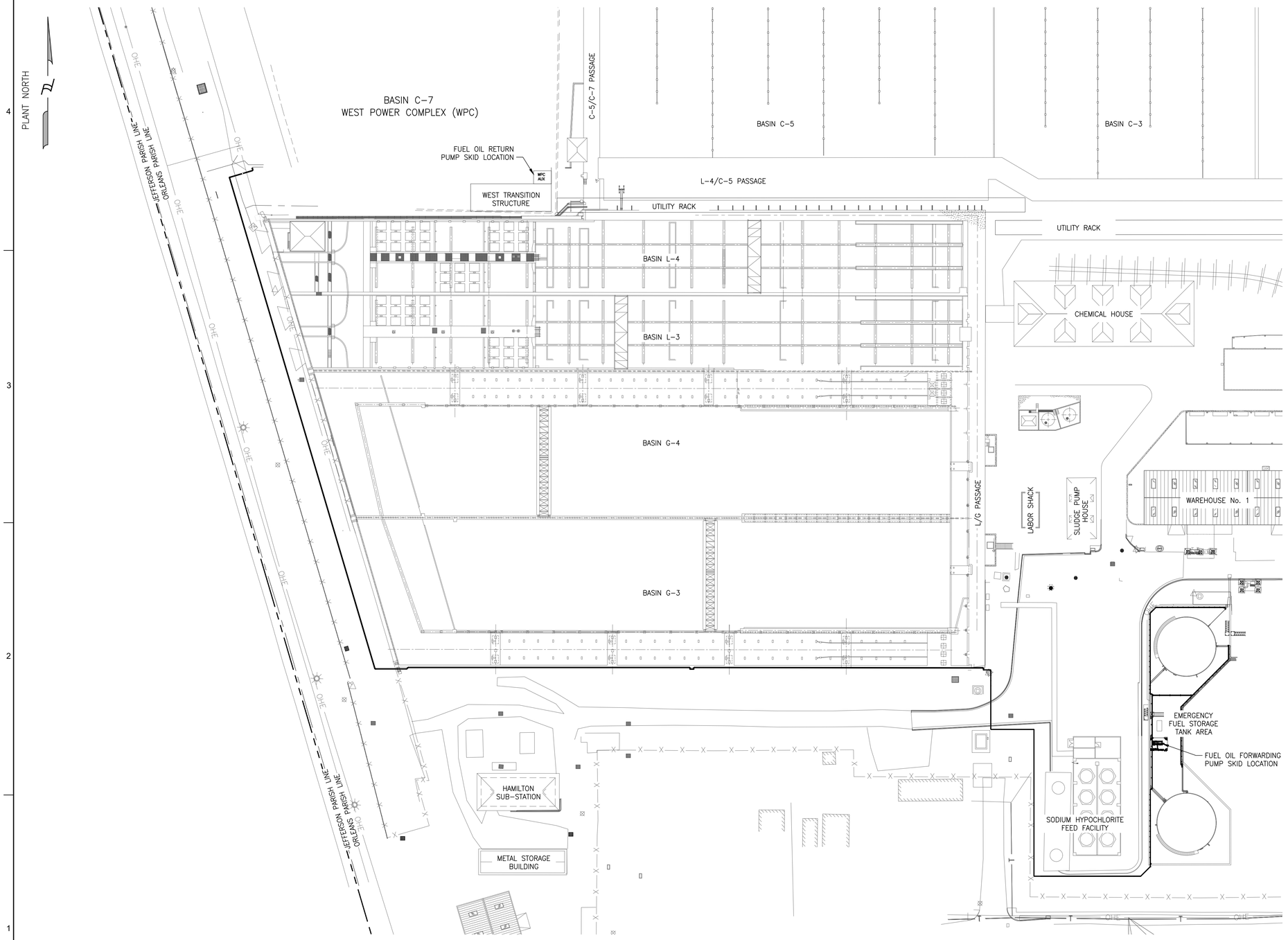

OVERALL SITE PLAN

SCALE: 1" = 50'

0 50' 100'

SCALE: 1" = 50'

REV.	DATE	DESCRIPTION	BY
0	03/11/2026	ISSUED FOR BID	LEK

STATE OF LOUISIANA
LAURA E. KELLY
License No. 39645
PROFESSIONAL ENGINEER
IN
MECHANICAL ENGINEERING
3/11/2026

WSP USA INC.
ONE PENN PLAZA, 4TH FLOOR,
NEW YORK, NY 10119
CERTIFICATE OF REGISTRATION # EF.0000623

FIRM No: LA – EF. 0003109
Infinity Engineering Consultants, LLC
Civil | Structural | Mechanical | Electrical | Marine | Transportation
Metairie, LA www.infinityec.com 504-304-0548

DATE	03/11/2026	JOB NO.	22-017

DESIGNED BY: L. KELLY
FILE NAME: Overall Site Plan.dwg

SEWERAGE AND WATER BOARD
OF NEW ORLEANS

CONTRACT No. 1444

WEST POWER COMPLEX @ CWPT
FUEL OIL DELIVERY SYSTEM

GENERAL

OVERALL SITE PLAN

DR.	F. CHERRY
CK:	L. KELLY
AP:	L. KELLY
LAST EDIT:	
SCALE:	AS NOTED
DATE:	03/11/2026

A/E DWG NO.
G2.00

DWG. No. 12196-W-24

SET NO: SHEET NO: 4 OF 72

BID PACKAGE - NOT FOR CONSTRUCTION

MECHANICAL GENERAL NOTES:

1. FOR UNDERGROUND PIPING SPECIFICATION REFER TO SECTION 153443 UNDERGROUND PIPING. FOR ABOVEGROUND PIPING REFER TO SECTION 405020 ABOVEGROUND POWER PLANT PIPING.
2. PIPE ELEVATIONS AND LOCATIONS SHOWN ON THE CONTRACT DOCUMENTS ARE DESIGN DIMENSIONS AND MAY NOT REFLECT THE ACTUAL FIELD CONDITIONS. BEFORE ANY FABRICATION WORK, CONTRACTOR SHALL FIELD VERIFY ALL DESIGN DIMENSIONS BASED ON ACTUAL FIELD CONDITIONS.
3. CONTRACTOR SHALL BE RESPONSIBLE FOR SURVEYING THE CONSTRUCTION AREA FOR PIPING INTERFERENCES WITH EXISTING PIPING, BUILDING STRUCTURES, AND ANY OTHER POTENTIAL INTERFERENCES PRIOR TO FABRICATION.
4. WHERE INTERFERENCES ARE FOUND IN THE FIELD, THE ISSUE SHALL BE RESOLVED WITH THE OWNER OR OWNER'S REPRESENTATIVE BEFORE PROCEEDING.
5. CONTRACTOR SHALL PROVIDE DRAIN CONNECTIONS AT ALL LOW POINTS IN ABOVEGROUND PIPING.
6. CONTRACTOR SHALL PROVIDE VENT CONNECTIONS AT ALL HIGH POINTS IN THE PIPING SYSTEMS WHETHER SHOWN ON CONTRACT DRAWINGS OR NOT.
7. ALL VENTS AND DRAINS SHALL BE EASILY ACCESSIBLE FROM PLATFORMS OR GRADE.
8. PRESSURE RATING AND MATERIAL OF VENT/DRAIN CONNECTION SHALL BE PER APPLICABLE PIPE SPECIFICATION.
9. WELDING SHALL CONFORM TO SECTION 485868 WELDING OF POWER PLANT PIPING.
10. CONTRACTOR SHALL ELECTRICALLY ISOLATE DESIGNATED PIPING FROM CONNECTING PIPING AND EQUIPMENT, STEEL, GROUNDING SYSTEM, AND OTHER BURIED PIPING SYSTEMS.
11. PIPING COMPONENTS AND FITTINGS ARE SHOWN FOR CONTRACTOR REFERENCE. CONTRACTOR SHALL BE RESPONSIBLE FOR ALL PIPING, COMPONENTS, AND ACCESSORIES TO COMPLETE NEW PIPING SYSTEMS AS NOTED IN SPECIFICATIONS, DRAWINGS, AND PIPING MATERIAL SPECIFICATION.
12. ALL PIPE SUPPORTS SHALL BE HOT DIPPED GALVANIZED AFTER FABRICATION UNLESS NOTED OTHERWISE.
13. CATHODIC PROTECTION SHALL BE APPLIED TO METAL PIPING AND FITTINGS UNDERGROUND, INCLUDING THE DOUBLE CONTAINMENT PIPING. CATHODIC PROTECTION SHOULD BE DESIGNED ACCORDING TO SECTION 485090 CATHODIC PROTECTION.

ABBREVIATIONS	
CODE	DESCRIPTION
AG	ABOVE GROUND
AUTO	AUTOMATIC
AUX	AUXILIARY
CN	CONTRACT NUMBER
EOP	END OF PIPE
ELEV	ELEVATION
HY	HYDRANT
IP	INSPECTION PORT
MJ	MECHANICAL JOINT
FO	FUEL OIL
RS	REMOVABLE SPOOL
TB	THRUST BEARING
TP	TIE–IN POINT
UG	UNDERGROUND

PLAN LAYOUT SYMBOLS AND CALLOUTS

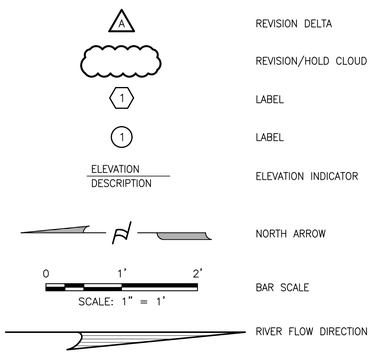

REVISION DELTA
REVISION/HOLD CLOUD
LABEL
LABEL
ELEVATION INDICATOR
NORTH ARROW
BAR SCALE
RIVER FLOW DIRECTION

PIPE & FITTING LEGEND

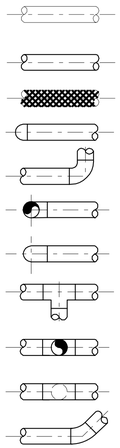

EXISTING PIPE
NEW PIPE
PIPE TO BE REMOVED
CAP
ELBOW, 90 DEGREE
ELBOW UP
ELBOW DOWN
TEE
TEE UP
TEE DOWN
ELBOW, 45 DEGREE

DETAIL, SECTION & ELEVATION CALLOUTS

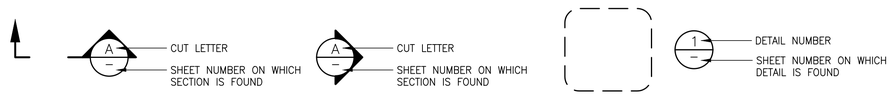

SUBTITLE

VIEW TITLE

SCALE: NTS

SUBTITLE

SECTION/ELEVATION

SCALE: NTS

A — CUT LETTER
G2 — SHEET NUMBER FROM WHICH SECTION IS CUT

DETAIL

SCALE: NTS

1 — DETAIL NUMBER
G2 — SHEET NUMBER FROM WHICH DETAIL IS FOUND

REV.	DATE	DESCRIPTION	BY
0	03/11/2026	ISSUED FOR BID	LEK

STATE OF LOUISIANA
LAURA LYMAN KELLY
License No. 39645
PROFESSIONAL ENGINEER
IN
MECHANICAL ENGINEERING
3/11/2026

WSP USA Inc.
ONE PENN PLAZA, 4TH FLOOR,
NEW YORK, NY 10119
CERTIFICATE OF AUTHORIZATION # EF.0000623

FIRM No: LA – EF. 0003709
Infinity Engineering Consultants, LLC
Civil | Structural | Mechanical | Electrical | Marine | Transportation
Metairie, LA | www.infinityec.com | 504-304-0548

DATE	03/11/2026	JOB NO.	22-017

DESIGNED BY: L. KELLY
FILE NAME: M1.00 MECHANICAL NOTES & LEGEND.dwg

SEWERAGE AND WATER BOARD OF NEW ORLEANS

CONTRACT No. 1444

WEST POWER COMPLEX @ CWPT
FUEL OIL DELIVERY SYSTEM

MECHANICAL

MECHANICAL NOTES & LEGEND

DR:	R. SCHOUEST
CK:	L. WEST
AP:	L. KELLY
LAST EDIT:	
SCALE:	AS NOTED
DATE:	03/11/2026

A/E DWG NO.
M1.00

DWG. No. 12196-W-24

SET NO: SHEET NO: 5 OF 72

BID PACKAGE - NOT FOR CONSTRUCTION

UNIT IDENTIFIERS

UNIT CODE	DESCRIPTION
0	COMMON
1	UNIT 1
2	UNIT 2
3	UNIT 3
4	UNIT 4
5	UNIT 5
6	UNIT 6

PROCESS PIPING

- MAIN PROCESS FLOW PIPING
- SECONDARY PROCESS FLOW PIPING
- VENDOR PIPING
- EXISTING PROCESS FLOW PIPING
- FUTURE PROCESS FLOW PIPING
- FLOW DIRECTION
- LINE SLOPE (TYP) — SLOPE
- LINE SLOPE (ALT) — SLOPE

PIPING VALVES

- BALL VALVE
- BUTTERFLY VALVE
- CHECK VALVE
- DIAPHRAGM VALVE
- GATE VALVE
- GLOBE VALVE
- NEEDLE VALVE
- PLUG VALVE
- POST INDICATOR VALVE
- STOP CHECK VALVE
- ANGLE VALVE
- ANGLE BLOWDOWN VALVE
- THREE WAY VALVE
- THREE WAY BALL VALVE

MISCELLANEOUS

- CONCENTRIC REDUCER
- ECCENTRIC REDUCER FOT
- ECCENTRIC REDUCER FOB
- WELD CAP
- THREADED/SCREWED
- CLEAN OUT
- OPEN DRAIN
- GOOSE NECK VENT
- HOSE CONNECTION
- BLIND FLANGE
- INSULATING FLANGE — IF
- DIELECTRIC UNION — DU
- MECHANICAL JOINT CAP

PIPING SPECIALTY

- FLAME ARRESTOR
- EXPANSION JOINT
- MECHANICAL COUPLING
- REMOVABLE SPOOL — RS
- FLEXIBLE HOSE
- STEAM TRAP — ST
- DRAIN TRAP — DT
- EXHAUST HEAD
- FILTER
- BACK PRESSURE DIFFUSER — BPD
- DIAPHRAGM SEAL
- AIR RELEASE VALVE — AV
- STATIC MIXER
- VENT SILENCER
- IN-LINE SILENCER
- RESTRICTION ORIFICE
- DUPLEX STRAINER
- T-TYPE STRAINER
- Y-TYPE STRAINER
- CONE STRAINER
- SINGLE BASKET STRAINER
- TEMPORARY STRAINER — TS
- FREE VENT W/SCREEN
- FLEXIBLE BALL JOINT
- OPEN SPECTACLE BLIND
- CLOSED SPECTACLE BLIND
- BACKFLOW PREVENTER

FIRE PROTECTION & SAFETY

- FIRE HYDRANT
- THREE WAY FIRE HYDRANT
- FIRE HYDRANT W/MONITOR
- STAND PIPE
- FIRE MONITOR
- FOAM MONITOR
- FIRE MONITOR ELEVATED
- FOAM MONITOR ELEVATED
- FIRE MONITOR REMOTE OPERATED
- FOAM MONITOR REMOTE OPERATED
- PRE-ACTION SPRINKLER
- DELUGE SPRAY
- WET SPRINKLER
- HOSE HOUSE — HH
- HOSE REEL
- HOSE RACK STATION
- EYE WASH
- SAFETY SHOWER
- SAFETY SHOWER AND EYE WASH

SYSTEM IDENTIFIERS

CODE	SYSTEM NAME	CODE	SYSTEM NAME
	POTABLE WATERS		STEAM AND CONDENSATE
PW	POTABLE WATER (ALSO FIREWATER)	ASS	AUXILIARY STEAM
	PROCESS WATERS	BDS	BOILER BLOWDOWN
ACW	AUXILIARY COOLING WATER	BFW	BOILER FEEDWATER
CCW	COMPONENT COOLING WATER	BSS	BOILER SAMPLING
CWS	CIRCULATING WATER	CDS	CONDENSATE & CONDENSATE RETURN
PRW	PROCESS WATER	DWS	DEMINERALIZED WATER
RWS	RAW WATER	ROP	RO PERMEATE
	MISC. AND HVAC WATERS	EXS	STEAM TURBINE EXTRACTION
CHW	CHILLED WATER	STX	STEAM TURBINE EXHAUST
SWS	SERVICE WATER	GSS	GLAND SEAL – TURBINE
UWS	UTILITY WATER	HPS	HIGH PRESSURE STEAM (MAIN STEAM)
	DRAIN/WASTE/VENT	LPS	LOW PRESSURE STEAM
DRS	DRAIN	SDN	STEAM DRAINS
EDS	EQUIPMENT DRAINS		PROCESS FLUIDS, OILS AND FUELS
MDS	MISCELLANEOUS DRAINS	FG	FUEL GAS
OD	OILY DRAINS	FO	FUEL OIL
SW	SANITARY WASTE	HYS	HYDRAULIC SUPPLY
ROR	WASTE-RO REJECT	LOS	LUBE OIL
WW	WASTE WATER	PDR	PROCESS DRAINS
	COMPRESSED AIR AND GAS	COS	CONTROL OIL
AEX	AIR EVACUATION		CHEMICALS, REAGENTS & POLYMERS
CAS	COMPRESSED AIR	CHX	CHEMICAL (REPLACE X WITH NUMBER)
CO2	CARBON DIOXIDE GAS		FIRE PROTECTION
IAS	INSTRUMENT AIR	FPS	FIRE PROTECTION
N2G	NITROGEN, GAS		
SAS	SERVICE AIR		
	VENDOR AND MISC. SYSTEMS		
GTS	GAS TURBINE/PACKAGE		
TWS	TURBINE WASH WATER		
STS	STEAM TURBINE/PACKAGE		

PIPING MATERIAL DESIGNATIONS

SEE UNDERGROUND PIPING SPECIFICATION 15.34.42 FOR YHD AND PIPE SPECIFICATION TABLES 40.50.20 FOR HC01.

DESIGNATION	DESCRIPTION
HC01	A106 GR B CARBON STEEL, CL150
YHD	DOUBLE WALL PIPE, A106 GR B CARBON STEEL, CL150

INSULATION CODES

N	NOT INSULATED
P	PERSONNEL PROTECTION
E	FREEZE PROTECTION W/ ELECTRIC TRACE
F	FREEZE PROTECTION
W	CONDENSATION CONTROL
H	HIGH TEMP INSULATION
M	MEDIUM TEMP INSULATION
T	THERMAL INS. W/ HEAT TRACE

PIPING VALVE POSITION

- NORMALLY OPEN
- NC — NORMALLY CLOSED
- LO — LOCKED OPEN
- LC — LOCKED CLOSED

RELIEF DEVICES

- PRESS RELIEF RUPTURE DISC
- PRESS RELIEF DEVICE
- VACUUM RELIEF RUPTURE DISC
- VACUUM RELIEF DEVICE

VALVE OPERATORS

- HAND WHEEL OR LEVER
- M — MOTOR OPERATOR
- DIAPHRAGM OPERATOR
- P — PISTON OPERATOR
- E/H — ELECTRO-HYDRAULIC

DESIGN BREAKS

- AHK | AHA — PIPING MATERIAL
- UNIT 1 | UNIT 2 — SYSTEM IDENTIFIER, UNIT, OR CODE
- IBL | IBH / AHK | AGF — SYSTEM CODE BREAK W/ PIPING MATERIAL CHANGE
- N1 — EQUIPMENT CONNECTION
- TP / XXX — TIE POINT
- BY VENDOR

EQUIPMENT IDENTIFIERS

CODE	DESCRIPTION
ACC	ACCUMULATOR
AGT	AGITATOR
ATM	ATTEMPERATOR
BLO	BLOWER
BLR	BOILER
BTL	BOTTLE, PRESSURIZED GAS
CDA	CONDENSER, AIR COOLED
CLF	CLARIFIER
CLR	COOLER
CMP	COMPRESSOR
CND	CONDENSER
CTW	COOLING TOWER
DEA	DEAERATOR
DGU	GENERATOR, DIESEL
DMP	DAMPER
DRV	ELECTRIC MOTOR
DRY	DRYER
EJR	EJECTOR
EXP	EXPANDER
FAN	FAN
FLT	FILTER
GEN	GENERATOR
HEX	HEAT EXCHANGER
HRU	HEAT RECOVERY SYSTEM
HTR	HEATER
MIX	MIXER
MSP	MOISTURE SEPARATOR
MTR	MOTOR
PMP	PUMP
PND	POND
ROU	REVERSE OSMOSIS UNIT
SCN	SCREEN
SCR	SELECTIVE CATALYTIC REDUCTION UNIT
SIL	SILENCER
SMP	SUMP
STK	STACK
TNK	TANK
TOT	CHEMICAL TOTE
TRB	TURBINE
VPR	VAPORIZER
VSL	VESSEL
WEL	WELL
ZXX	SKID SYSTEM

SPECIALTY IDENTIFIERS

CODE	DESCRIPTION
AT	ATTEMPERATOR
AV	AIR RELEASE VALVE
BL	BLINDS
CN	CONNECTION
CO	CLEANOUTS
DR	DRAIN
EJ	EXPANSION JOINT
FA	FLAME ARRESTOR
FC	FIRE CONNECTION
FM	FIRE MONITOR
FS	FLOW SIGHT GLASS
FU	FILTER UNIT
HH	HOSE HOUSE
HU	HOSE UNIT
HY	HYDRANT
RO	RESTRICTION ORIFICE
RV	RELIEF VALVE
SD	SUCTION DIFFUSER
SE	SEPARATOR
SL	SILENCER
SM	MIXER
SN	SCREEN
SP	PIPING
SS	SAFETY SHOWER
SU	STRAINER UNIT
TP	STEAM TRAP

ABBREVIATIONS

CODE	DESCRIPTION
AG	ABOVE GROUND
AUTO	AUTOMATIC
AUX	AUXILIARY
CN	CONTRACT NUMBER
DCS	DISTRIBUTED CONTROL SYSTEM
FD	FLOOR DRAIN
GTG	GAS TURBINE GENERATOR
HW	HARDWIRED
IP	INSPECTION PORT
MAN	MANUAL
RNG	RUNNING
RS	REMOVABLE SPOOL
RUN	RUN COMMAND
STRT/STP	START / STOP COMMAND
TB	THRUST BEARING
TBL	TROUBLE
UG	UNDER GROUND

PIPING DESIGNATION

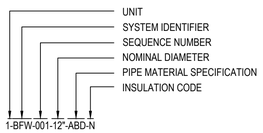

EQUIPMENT TAGGING

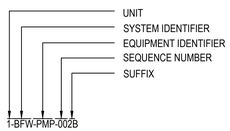

MANUAL VALVE TAGGING

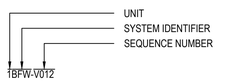

PIPING SPECIALTY TAGGING

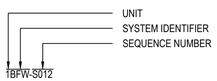

OFF SHEET & UNIT CONNECTORS

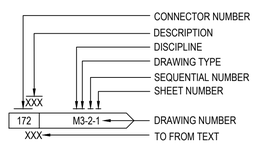

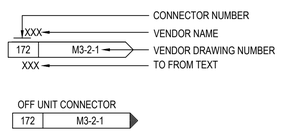

REV.	DATE	DESCRIPTION	BY
0	03/11/26	ISSUED FOR BID	MS

STATE OF LOUISIANA — SARAH AMANDA STALLINGS — License No. 46647 — PROFESSIONAL ENGINEER

ENGINEER: MANDY STALLINGS
LICENSE #: PE # 0046647

WSP USA INC.
ONE PENN PLAZA, 11TH FLOOR
NEW YORK, NY 10119
CERTIFICATE OF REGISTRATION # EF 0000623

DATE	12/17/25	JOB NO.	174602

DESIGNED BY: M. STALLINGS
FILE NAME: M3-0-1.dwg

SEWERAGE AND WATER BOARD OF NEW ORLEANS

CONTRACT No. 1444

WEST POWER COMPLEX @ CWTP
FUEL OIL DELIVERY SYSTEM

MECHANICAL

PIPING AND INSTRUMENTATION DIAGRAM LEGEND

DR.	M. STALLINGS
CK:	T. KUTLOWSKI
AP:	M. STALLINGS
LAST EDIT:	
SCALE:	NTS
DATE:	12/17/25

A/E DWG NO. M3-0-1

DWG. No. 12196-W-24

SET NO: SHEET NO: 6 OF 72

3/11/2026 1:40:56 PM

BID PACKAGE - NOT FOR CONSTRUCTION

INSTRUMENTATION LETTERING IDENTIFICATION TABLE

	FIRST LETTER		SUCCEEDING LETTERS		
	MEASURED OR INITIATED VARIABLE	MODIFIER	READOUT / PASSIVE FUNCTION	OUTPUT FUNCTION	MODIFIER
A	ANALYSIS		ALARM		AUTO
B	BURNER OR COMBUSTION		USER'S CHOICE	USER'S CHOICE	USER'S CHOICE
C	CONDUCTIVITY (ELEC)			CONTROL	CLOSE
D	DENSITY (MASS) OR SPECIFIC GRAVITY	DIFFERENTIAL			
E	VOLTAGE (EMF)		PRIMARY ELEMENT		ENABLE
F	FLOW RATE	RATIO (FRACTION)			FAULT OR TROUBLE
G	GAGING (DIMENSIONAL)		GLASS		
H	HAND (MANUALLY INITIATED)				HIGH
I	CURRENT (ELECTRICAL)		INDICATE		
J	POWER	SCAN			
K	TIME OR TIME SCHEDULE	TIME RATE OF CHANGE			
L	LEVEL		LIGHT (PILOT)		LOW
M	MOISTURE OR HUMIDITY	MOMENTARY			MIDDLE OR INTERMEDIATE
N	USER'S CHOICE		USER'S CHOICE	USER'S CHOICE	USER'S CHOICE
O	USER'S CHOICE		ORIFICE (RESTRICTION)		OPEN
P	PRESSURE OR VACUUM		POINT (TEST CONNECTION)		
Q	QUANTITY OR EVENT	INTEGRATE OR TOTALIZE			
R	RADIATION RESTRICTION		RECORD OR PRINT		RUN
S	SPEED OR FREQUENCY	SAFETY		SWITCH	START
T	TEMPERATURE			TRANSMIT	TRIP / STOP
U	MULTI VARIABLE		MULTIFUNCTION	MULTIFUNCTION	MULTIFUNCTION
V	VIBRATION			VALVE	
W	WEIGHT OR FORCE		WELL		
X	UNCLASSIFIED	X AXIS	UNCLASSIFIED	UNCLASSIFIED	UNCLASSIFIED
Y	EVENT, STATE, OR PRESENCE	Y AXIS		RELAY, COMPUTE, CONVERT	
Z	POSITION	Z AXIS		DRIVE, ACTUATOR OR UNCLASSIFIED FINAL CONTROL ELEMENT	

INSTRUMENT AND RELIEF DEVICE TAGGING

SHOWN ON DRAWING

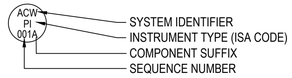

NOTE:
ALL SYSTEM IDENTIFIERS SHOWN ON P&IDS HAVE A UNIT IDENTIFIER PREFIX. THIS IS NOT SHOWN ON INSTRUMENT BUBBLES FOR CLARITY

UNIT IDENTIFIERS WILL BE THE SAME AS THE ASSOCIATED LINE OR EQUIPMENT UNIT IDENTIFIERS AS SHOWN ON P&IDS.

SIGNAL LINES

- CONNECT TO PROCESS
- PNEUMATIC SIGNAL
- ELECTRICAL SIGNAL
- CAPILLARY TUBING (FILLED SYSTEM)
- HYDRAULIC SIGNAL
- ELECTROMAGNETIC / SONIC SIGNAL (WITHOUT WIRING OR TUBING)
- MECHANICAL LINK SIGNAL
- DCS SOFTWARE OR DATA LINK

GENERAL INSTRUMENTS

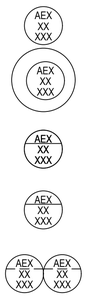

- LOCALLY MOUNTED INSTRUMENT SINGLE VARIABLE ANY NUMBER OF FUNCTIONS
- HEAT TRACED INSTRUMENTS ARE INDICATED WITH A DASHED LINE AROUND INSTRUMENT
- BOARD MOUNTED (FRONT) N - BOARD IDENTIFICATION (OPTIONAL) P - INSTRUMENT REQUIR3ES 120VAC INSTRUMENT POWER
- MOUNTED BEHIND DOOR OR BACK OF PANEL
- TWO MEASURED VARIABLE OR OPTIONALLY TWO FUNCTIONS (ADDITIONAL TANGENT BALLOONS MAY BE ADDED AS REQUIRED)

THERMOCOUPLES / THERMOWELLS

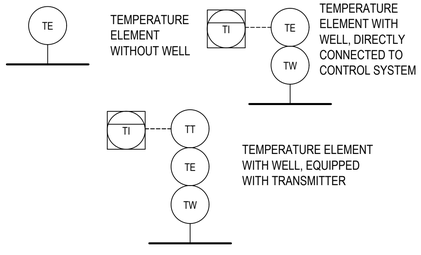

- TEMPERATURE ELEMENT WITHOUT WELL
- TEMPERATURE ELEMENT WITH WELL, DIRECTLY CONNECTED TO CONTROL SYSTEM
- TEMPERATURE ELEMENT WITH WELL, EQUIPPED WITH TRANSMITTER

ALL THERMOWELLS ARE 1" SW, UNLESS OTHERWISE NOTE

ANALYSIS

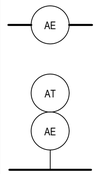

- FLOW THROUGH TYPE
- * THE ANALYZED PROPERTY NAME WILL BE PLACED OUTSIDE THE INSTRUMENT CIRCLE TO IDENTIFY THE SPECIFIC ANALYSIS

POSITION

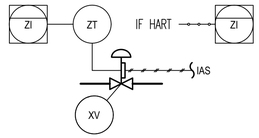

TYPICAL MODULATING CONTROL VALVE WITH POSITION TRANSMITTER

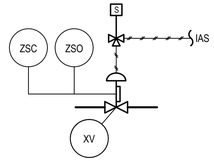

TYPICAL ON/OFF CONTROL VALVE WITH POSITION SWITCHES

LEVEL

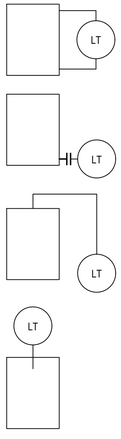

- LEVEL INDICATOR MAGNETIC WINDOW OR FLOAT OR DISPLACEMENT TYPE
- LEVEL TRANSMITTER WITH TWO CONNECTIONS
- LEVEL TRANSMITTER WITH TWO CONNECTIONS
- LEVEL TRANSMITTER WITH TWO CONNECTIONS
- LEVEL TRANSMITTER ULTRASONIC, RADAR OR CAPACITANCE

CONTROL VALVE FAILURE MODES



ATC - AIR TO CLOSE
ATO - AIR TO OPEN
FC - FAIL CLOSE
FO - FAIL OPEN
FF - FAIL FIXED
- (POSITION DOES NOT CHANGE)

SENSORS - FLOW

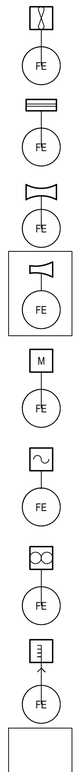

- IN-LINE TURBINE OR PROPELLER FLOW INSTRUMENT
- STRAIGHTENING VANE
- VENTURI
- FLOW NOZZLE
- IN-LINE MAGNETIC FLOW INSTRUMENT
- IN-LINE ULTRASONIC FLOW INSTRUMENT
- POSITIVE DISPLACEMENT FLOW INSTRUMENT
- IN-LINE AVERAGING PITOT TUBE
- IN-LINE EXTRACTABLE AVERAGING PITOT TUBE
- VORTEX FLOW INSTRUMENT
- ORIFICE PLATE WITH FLANGES
- IN-LINE FLOW INDICATION (SIGHT GLASS)
- MASS FLOW (CORIOLIS, THERMAL, ETC.)

PRESSURE

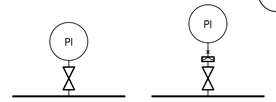

- PRESSURE INDICATOR DIRECTLY CONNECTED
- PRESSURE INDICATOR CONNECTED TO DIAPHRAGM SEAL WITH FILLED SYSTEM

ALL PRESSURE SENSING ELEMENTS ON FRP PIPE WILL BE 1" FLANGED CONNECTIONS. OTHER PIPE MATERIALS WILL INCLUDE 3/4" SW UNLESS OTHERWISE NOTED.

CONTROL VALVE ACTUATORS

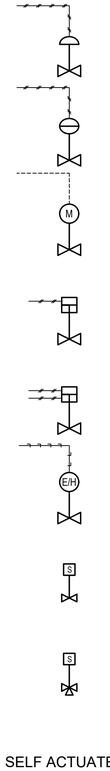

- PNEUMATIC DIAPHRAGM
- DIAPHRAGM PRESSURE BALANCED
- ROTARY MOTOR SHOWN TYPICALLY WITH ELECTRICAL SIGNAL
- PNEUMATIC CYLINDER SINGLE - ACTION
- PNEUMATIC CYLINDER DUAL - ACTION
- ELECTRO - HYDRAULIC
- TWO WAY SOLENOID
- THREE WAY SOLENOID

SELF ACTUATED PRESSURE DEVICES

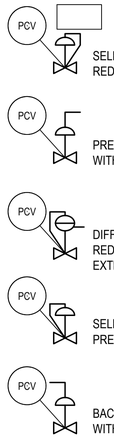

- SELF CONTAINED PRESSURE REDUCING REGULATOR
- PRESSURE REDUCED REGULATOR WITH EXTERNAL TAP
- DIFFERENTIAL PRESSURE REDUCING REGULATOR WITH EXTERNAL AND INTERNAL TAPS
- SELF CONTAINED BACK PRESSURE REGULATOR
- BACK PRESSURE REGULATOR WITH EXTERNAL TAP

SPECIALTY CONTROL VALVES



STEAM CONDITIONING VALVE

CONTROL AND COMPUTER SYSTEM SYMBOLS

CONTROL SHARED DISPLAY SYMBOLS

NORMALLY ACCESSIBLE TO OPERATOR

INDICATOR/CONTROLLER/RECORDER OR ALARM POINTS (TYPICALLY VIDEO DISPLAY)

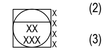

(1) SHARED DISPLAY
(2) SHARED DISPLAY AND
(3) ACCESS LIMITED TO COMMUNICATION LINK
(4) OPERATOR INTERFACE ON COMMUNICATION LINK

AUXILIARY OPERATOR INTERFACE DEVICE



(1) PANEL MOUNTED NORMALLY HAVING AN ANALOG FACEPLATE - NOT NORMALLY MOUNTED ON MAIN OPERATOR CONSOLE
(2) CAN BE A BACK-UP CONTROLLER OR MANUAL STATION
(3) ACCESS MAY BE LIMITED TO COMMUNICATION LINK
(4) OPERATOR INTERFACE VIA THE COMMUNICATION LINK

NOT NORMALLY ACCESSIBLE TO OPERATOR



(1) SHARED BLIND CONTROLLER
(2) SHARED DISPLAY INSTALLED IN FIELD
(3) COMPUTATION SIGNAL CONDITIONING IN SHARED CONTROLLER
(4) MAY BE ON COMMUNICATIONS LINK
(5) NORMALLY BLIND OPERATION
(6) MAY BE ALTERED BY CONFIGURATION

COMPUTER SYMBOLS

THE FUNCTION DESIGNATIONS ASSOCIATED WITH CONTROLLERS, COMPUTING DEVICES, AND CONVERTERS MAY BE USED ON THEIR OWN OR IN COMBINATION WITH CONTROL AND COMPUTER SYMBOLS.



ALM	ALARM	f(x)	NONLINEAR OR UNSPECIFIED FUNCTION
Σ/n	AVERAGING	1-0	ON-OFF
x^n	EXPONENTIAL	+	PLUS BIAS
dist	DERIVATIVE	±	PLUS / MINUS BIAS
△	DIFFERENCE	K	PROPORTIONAL
DIR	DIRECT ACTING	REV	REVERSE ACTING
÷	DIVIDING	√	ROOT EXTRACTION
>	HIGH LIMITING	Σ	SUMMING
>	HIGH SELECTING	f(t)	TIME FUNCTION
∫	INTEGRAL	2oo3	TWO OUT OF THREE
-K	INVERSE PROPORTIONAL	⏚	VELOCITY LIMITER
LEAD LAG	LEAD/LAG		
<	LOW LIMITING		
<	LOW SELECTING		
<>	MEDIUM SELECT		
−	MINUS BIAS		
X	MULTIPLYING		

LOGIC AND SEQUENTIAL CONTROL SYMBOLS

NOT NORMALLY ACCESSIBLE TO OPERATOR

INTERLOCK FUNCTION MAY BE HARD WIRED (HW) OR SOFT WIRED CONTROL SYSTEM BASED, (DCS, PLC, PCS, ECT)



X-INDICATES THE TYPE OF INTERLOCK (DCS, HW, ETC)

Y-UNIQUE LETTER IDENTIFICATION FOR INTERLOCKS THAT ARE USED TO TRIP MULTIPLE DEVICES

Z-SYSTEM IDENTIFIER. INDICATES THE SYSTEM THAT INITIATED THE INTERLOCK

SOFTWARE ALARM

SOFTWARE ALARMS MAY BE IDENTIFIED BY PLACING LETTER DESIGNATORS ON THE INPUT OR THE OUTPUT SIGNAL LINES

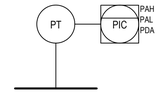

OFF LINE INSTRUMENTS

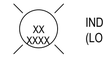

INDICATING LIGHT (LOCAL MOUNT)

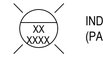

INDICATING LIGHT (PANEL MOUNT)

COMPUTER SYMBOLS

NORMALLY ACCESSIBLE TO OPERATOR

INDICATOR/CONTROLLER/RECORDER OR ALARM POINTS (TYPICALLY VIDEO DISPLAY)



NOT NORMALLY ACCESSIBLE TO OPERATOR



(1) INPUT / OUTPUT INTERFACE
(2) COMPUTATION / SIGNAL CONDITIONING WITH A COMPUTER
(3) MAY BE USED AS A BLIND CONTROLLER OR A SOFTWARE CALCULATION MODULE

NOT NORMALLY ACCESSIBLE TO OPERATOR



(1) PANEL MOUNTED - NORMALLY HAVING AN ANALOG FACEPLATE - NOT NORMALLY MOUNTED ON MAIN OPERATOR CONSOLE

REV.	DATE	DESCRIPTION	BY
0	03/11/26	ISSUED FOR BID	MS

WSP USA INC.
ONE PENNSYLVANIA PLAZA, 55TH FLOOR
NEW YORK, NY 10119
CERTIFICATE OF REGISTRATION # EF.0009023

DATE	12/17/25	JOB NO.	174602

DESIGNED BY: M. STALLINGS
FILE NAME: M3-0-2.dwg

STATE OF LOUISIANA
SARAH AMANDA STALLINGS
License No. 46647
PROFESSIONAL ENGINEER

ENGINEER: MANDY STALLINGS
LICENSE #: PE # 0046647

SEWERAGE AND WATER BOARD OF NEW ORLEANS

CONTRACT No. 1444
WEST POWER COMPLEX @ CWTP
FUEL OIL DELIVERY SYSTEM

MECHANICAL

PIPING AND INSTRUMENTATION DIAGRAM LEGEND

DR:	M. STALLINGS
CK:	T. KUTLOWSKI
AP:	M. STALLINGS
LAST EDIT:	
SCALE:	NTS
DATE:	12/17/25

A/E DWG NO.: M3-0-2

DWG. No. 12196-W-24

SET NO: SHEET NO: 7 OF 72

BID PACKAGE - NOT FOR CONSTRUCTION

3/11/2026 1:42:10 PM

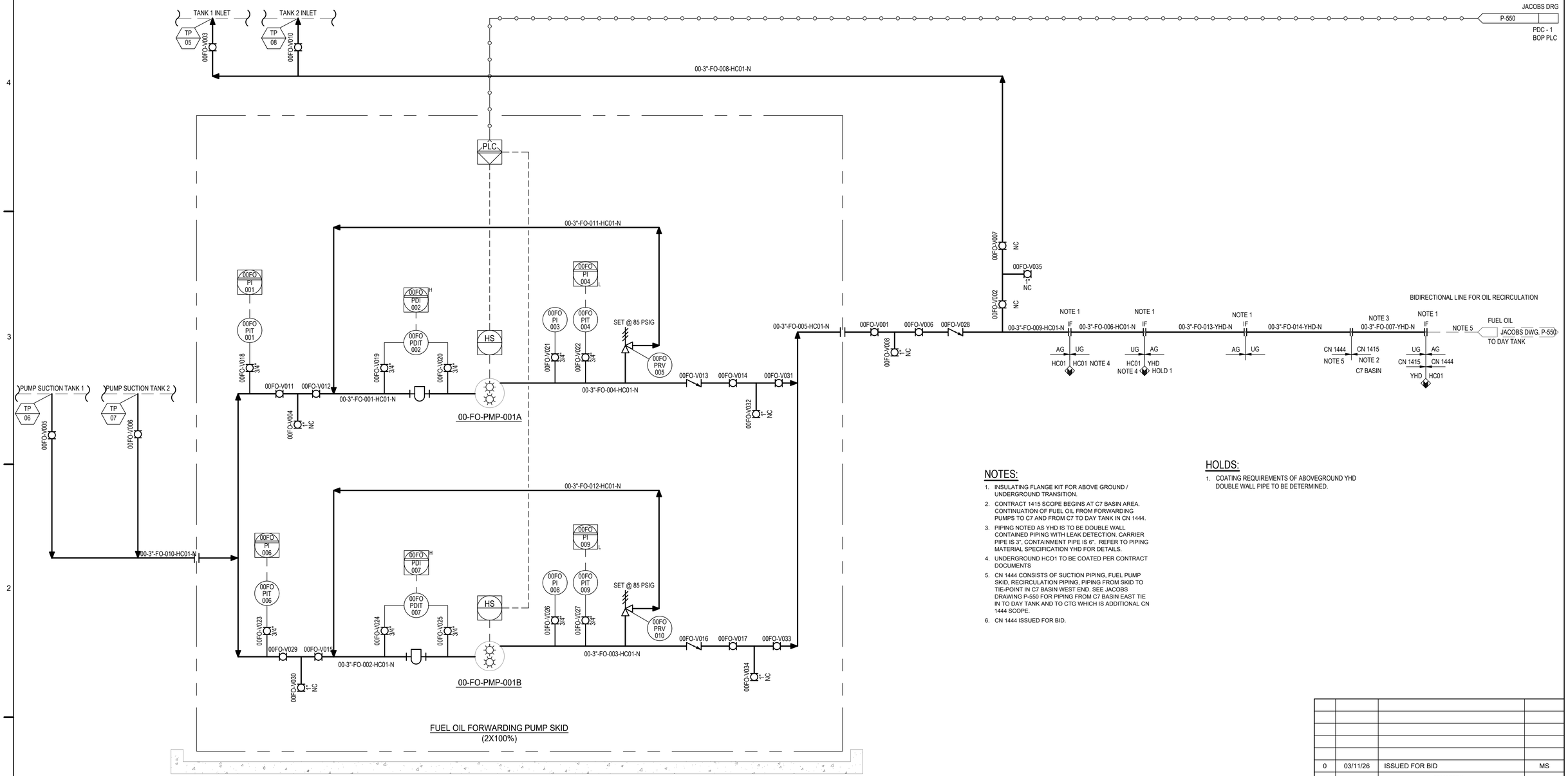

NOTES:

1. INSULATING FLANGE KIT FOR ABOVE GROUND / UNDERGROUND TRANSITION.
2. CONTRACT 1415 SCOPE BEGINS AT C7 BASIN AREA. CONTINUATION OF FUEL OIL FROM FORWARDING PUMPS TO C7 AND FROM C7 TO DAY TANK IN CN 1444.
3. PIPING NOTED AS YHD IS TO BE DOUBLE WALL CONTAINED PIPING WITH LEAK DETECTION. CARRIER PIPE IS 3", CONTAINMENT PIPE IS 6". REFER TO PIPING MATERIAL SPECIFICATION YHD FOR DETAILS.
4. UNDERGROUND HCO1 TO BE COATED PER CONTRACT DOCUMENTS
5. CN 1444 CONSISTS OF SUCTION PIPING, FUEL PUMP SKID, RECIRCULATION PIPING, PIPING FROM SKID TO TIE-POINT IN C7 BASIN WEST END. SEE JACOBS DRAWING P-550 FOR PIPING FROM C7 BASIN EAST TIE IN TO DAY TANK AND TO CTG WHICH IS ADDITIONAL CN 1444 SCOPE.
6. CN 1444 ISSUED FOR BID.

HOLDS:

1. COATING REQUIREMENTS OF ABOVEGROUND YHD DOUBLE WALL PIPE TO BE DETERMINED.

REV.	DATE	DESCRIPTION	BY
0	03/11/26	ISSUED FOR BID	MS

SEWERAGE AND WATER BOARD OF NEW ORLEANS

CONTRACT No. 1444

WEST POWER COMPLEX @ CWTP
FUEL OIL DELIVERY SYSTEM

MECHANICAL

PIPING AND INSTRUMENTATION DIAGRAM FUEL OIL

STATE OF LOUISIANA
SARAH AMANDA STALLINGS
License No. 46647
PROFESSIONAL ENGINEER

ENGINEER: MANDY STALLINGS
LICENSE #: PE # 0046647

WSP USA INC.
ONE PENNSYLVANIA PLAZA, 55TH FLOOR
NEW YORK, NY 10119
CERTIFICATE OF REGISTRATION # EF.0009023

DATE	12/04/2025	JOB NO.	174602

DESIGNED BY: M. STALLINGS
FILE NAME: M3-2.dwg

DR.	M. STALLINGS
CK:	T. KUTLOWSKI
AP:	M. STALLINGS
LAST EDIT:	
SCALE:	NTS
DATE:	12/04/2025

A/E DWG NO.
M3-2

DWG. No. 12196-W-24

SET NO:
SHEET NO: 8 OF 72

3/11/2026 1:37:52 PM

BID PACKAGE - NOT FOR CONSTRUCTION

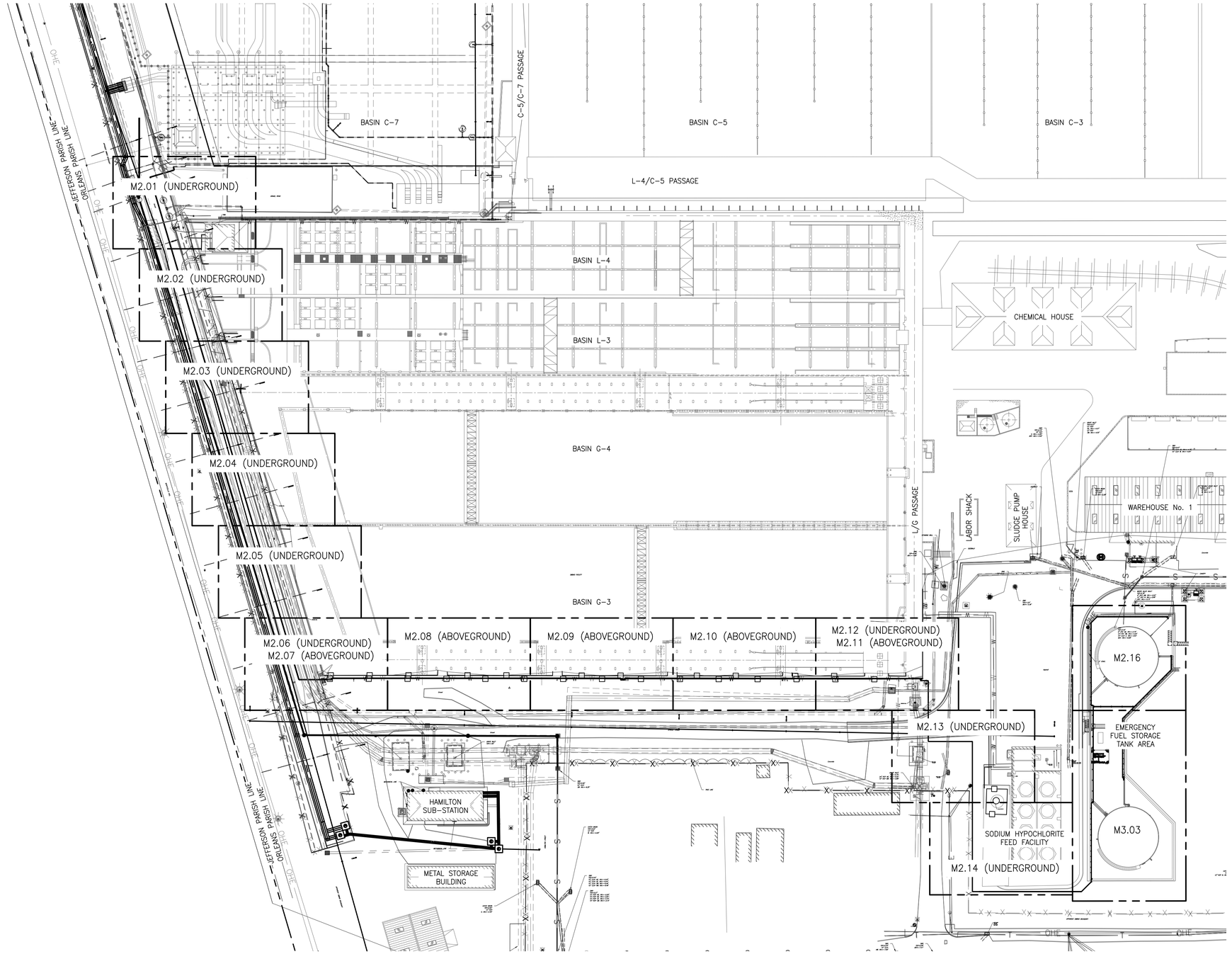

OVERALL PIPING PLAN

SCALE: 1" = 50'

0 50' 100'

SCALE: 1" = 50'

REV.	DATE	DESCRIPTION	BY
0	03/11/2026	ISSUED FOR BID	LEK

SEWERAGE AND WATER BOARD OF NEW ORLEANS

CONTRACT No. 1444

WEST POWER COMPLEX @ CWPT
FUEL OIL DELIVERY SYSTEM

MECHANICAL

OVERALL PIPING PLAN

STATE OF LOUISIANA
LESLIE E. KELLY
License No. 39645
PROFESSIONAL ENGINEER
IN
MECHANICAL ENGINEERING
3/11/2026

WSP USA INC.
ONE PENN PLAZA, 4TH FLOOR,
NEW YORK, NY 10119
CERTIFICATE OF REGISTRATION # EF.0000623

FIRM No: LA – EF. 0003109
Infinity Engineering Consultants, LLC
Civil | Structural | Mechanical | Electrical | Marine | Transportation
Metairie, LA www.infinityec.com 504-304-0548

DATE	03/11/2026	JOB NO.	22-017

DESIGNED BY: L. KELLY
FILE NAME: M2.00 OVERALL PIPING PLAN.dwg

DR.	R. SCHOUEST
CK:	L. WEST
AP:	L. KELLY
LAST EDIT:	
SCALE:	AS NOTED
DATE:	03/11/2026

A/E DWG NO.
M2.00

DWG. No. 12196-W-24

SET NO: SHEET NO: 9 OF 72

BID PACKAGE - NOT FOR CONSTRUCTION

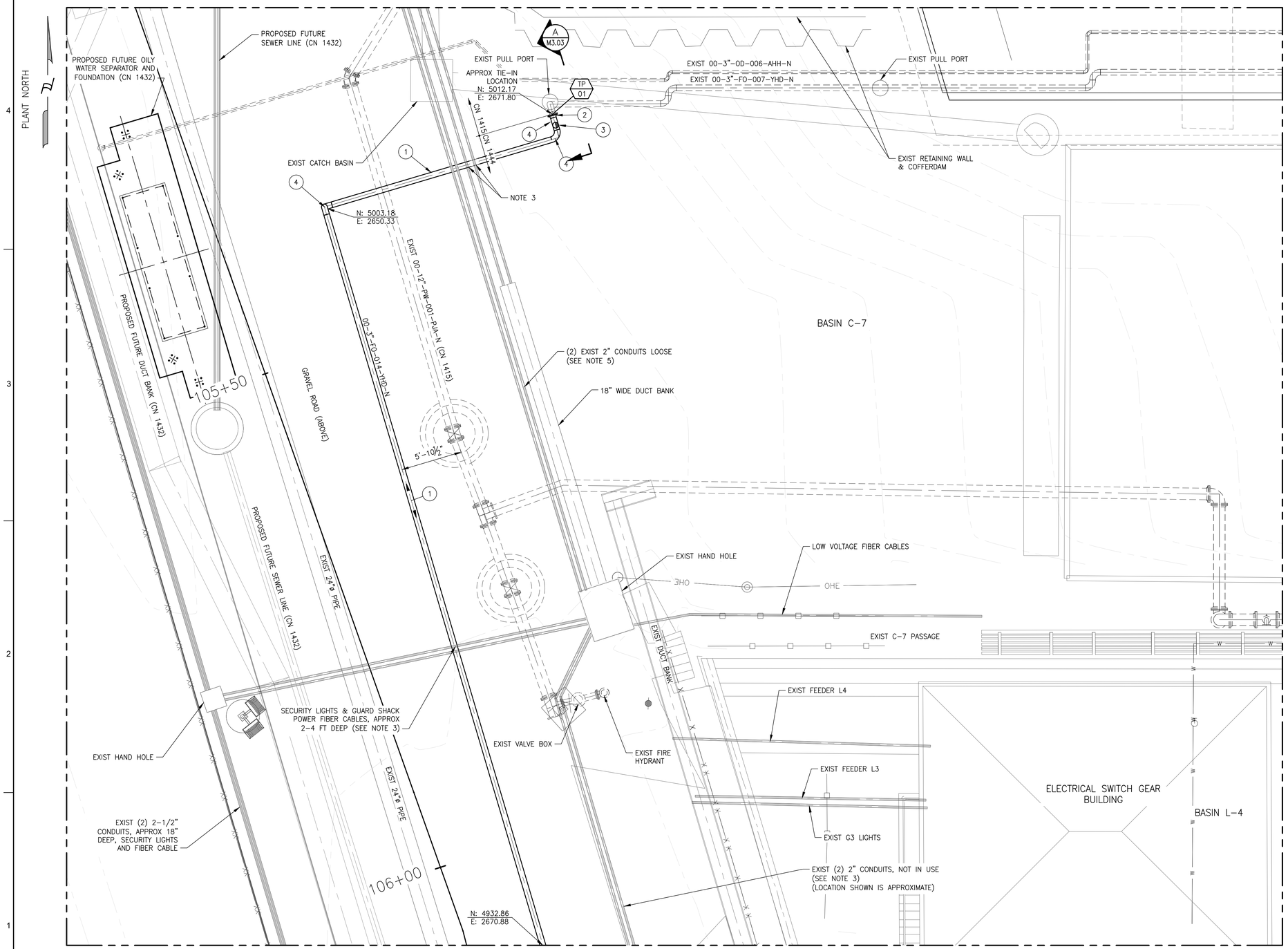

MATCHLINE DWG M2.02

UNDERGROUND PIPING PLAN

SCALE: 1" = 5'

0 5' 10'

SCALE: 1" = 5'

LEGEND		
ITEM#	DESCRIPTION	NPD(IN)
1	PIPE, DOUBLE WALL PIPING WITH LEAK DETECTION, 6" CONTAINMENT PIPE, MATERIAL SPEC YHD	3
2	FLANGE, BUTTWELD, RF, CLASS 150, ASTM 105, ASME B16.5, STD BORE, WN OR SLIP-ON	3
3	TEE, DOUBLE WALL PIPING WITH LEAK DETECTION, 6" CONTAINMENT FITTING, MATERIAL SPEC YHD	3
4	90° ELBOW, DOUBLE WALL PIPING WITH LEAK DETECTION, 6" CONTAINMENT FITTING, MATERIAL SPEC YHD	3

NOTES:

1. PIPING SHALL MEET PIPE SPECIFICATIONS NOTED HC01 AND YHD.
2. CONTRACTOR TO VERIFY FINAL GRADE. UNDERGROUND PIPING TO BE MINIMUM 3'-6" BELOW FINAL GRADE UNLESS NOTED OTHERWISE.
3. CONTRACTOR SHALL EXCAVATE CAREFULLY IN THE AREA OF KNOWN CONDUITS AND DUCT BANK TO AVOID DAMAGE. IF CONDUITS OR DUCT BANK ARE DAMAGED DURING CONSTRUCTION, CONTRACTOR SHALL REPAIR.
4. CONTRACTOR SHALL PROVIDE ONE (1) WEEK ADVANCE NOTICE OF PROPOSED POWER OUTAGE REQUESTS IF CROSSING OR WITHIN 10 FEET OF EXISTING ELECTRICAL DUCT BANK. SEE GENERAL NOTES.
5. CONDUITS ARE ABANDONED IN PLACE. IF ENCOUNTERED AND IN CONFLICT WITH CONSTRUCTION, THEY CAN BE REMOVED.

REV:	DATE	DESCRIPTION	BY
0	03/11/2026	ISSUED FOR BID	LEK

STATE OF LOUISIANA
LINDA EVANS KELLY
License No. 39645
PROFESSIONAL ENGINEER
IN
MECHANICAL ENGINEERING
3/11/2026

WSP USA Inc.
ONE PENN PLAZA, 4TH FLOOR,
NEW YORK, NY 10119
CERTIFICATE OF REGISTRATION # EF 2000623

FIRM No: LA – EF. 0003109
Infinity Engineering Consultants, LLC
Civil | Structural | Mechanical | Electrical | Marine | Transportation
Metairie, LA www.infinityec.com 504-304-0548

DATE	03/11/2026
JOB NO.	22-017
DESIGNED BY:	L. KELLY
FILE NAME:	M2.01 UNDERGROUND PIPING PLAN.dwg

SEWERAGE AND WATER BOARD OF NEW ORLEANS

CONTRACT No. 1444

WEST POWER COMPLEX @ CWPT
FUEL OIL DELIVERY SYSTEM

MECHANICAL

UNDERGROUND PIPING PLAN

DR:	R. SCHOUEST
CK:	L. KELLY
AP:	L. KELLY
LAST EDIT:	
SCALE:	AS NOTED
DATE:	03/11/2026

A/E DWG NO.: M2.01

DWG. No. 12196-W-24

SET NO: SHEET NO: OF

BID PACKAGE - NOT FOR CONSTRUCTION

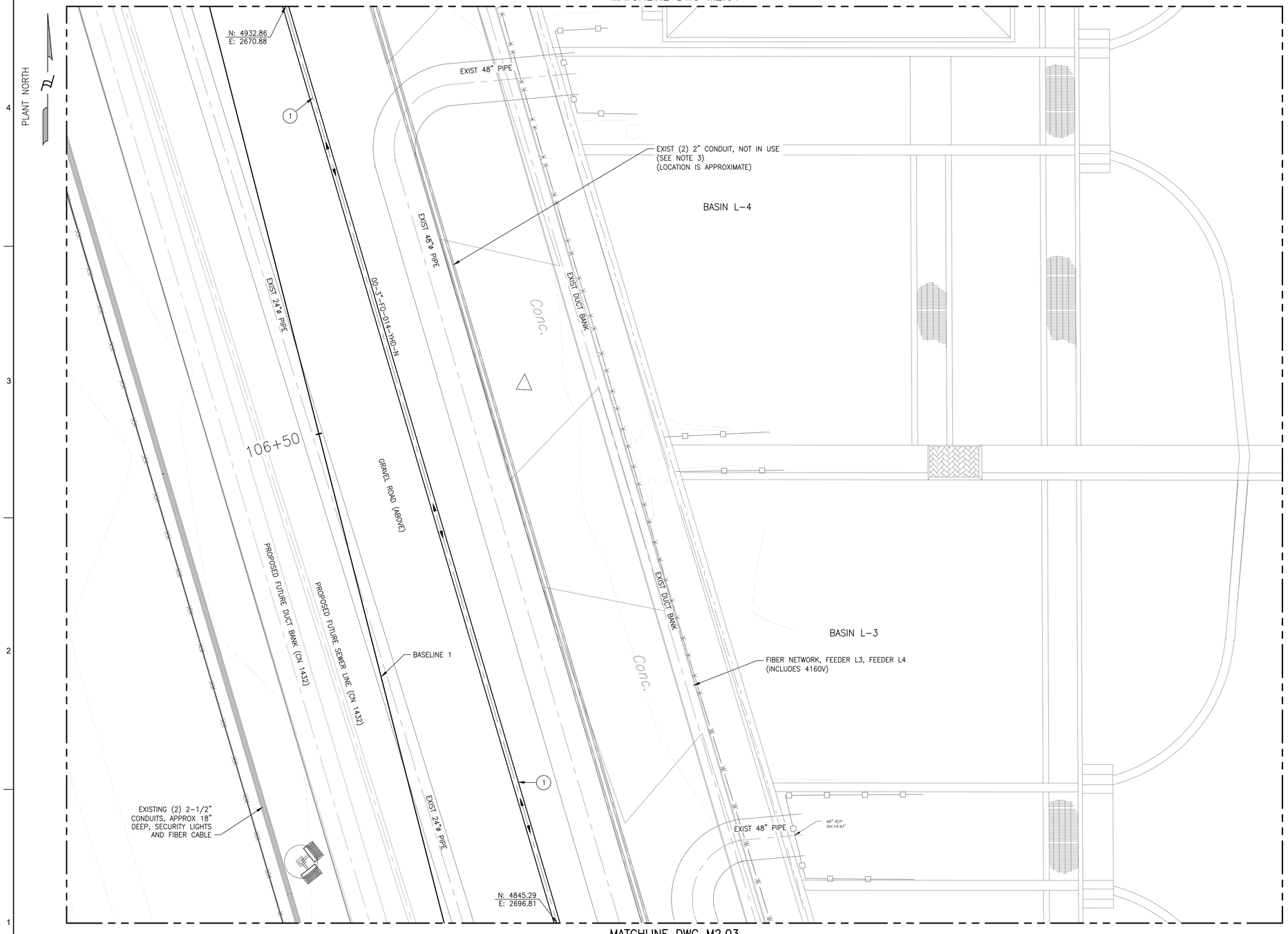

UNDERGROUND PIPING PLAN

SCALE: 1" = 5'

0 5' 10'

SCALE: 1" = 5'

LEGEND		
ITEM#	DESCRIPTION	NPD(IN)
1	PIPE, DOUBLE WALL PIPING WITH LEAK DETECTION, 6" CONTAINMENT PIPE, MATERIAL SPEC YHD	3
2	90° ELBOW, DOUBLE WALL PIPING WITH LEAK DETECTION, 6" CONTAINMENT FITTING, MATERIAL SPEC YHD	3

NOTES:

1. PIPING SHALL MEET PIPE SPECIFICATIONS NOTED HC01 AND YHD.
2. CONTRACTOR TO VERIFY FINAL GRADE. UNDERGROUND PIPING TO BE MINIMUM 3'-6" BELOW FINAL GRADE UNLESS NOTED OTHERWISE.
3. CONTRACTOR SHALL EXCAVATE CAREFULLY IN THE AREA OF KNOWN CONDUITS AND DUCT BANK TO AVOID DAMAGE. IF CONDUITS OR DUCT BANK ARE DAMAGED DURING CONSTRUCTION, CONTRACTOR SHALL REPAIR.
4. CONTRACTOR SHALL PROVIDE ONE (1) WEEK ADVANCE NOTICE OF PROPOSED POWER OUTAGE REQUESTS IF CROSSING OR WITHIN 10 FEET OF EXISTING ELECTRICAL DUCT BANK. SEE GENERAL NOTES.

REV.	DATE	DESCRIPTION	BY
0	03/11/2026	ISSUED FOR BID	LEK

STATE OF LOUISIANA
LESLIE EVAN KELLY
License No. 39645
PROFESSIONAL ENGINEER
IN
MECHANICAL ENGINEERING
3/11/2026

WSP USA INC.
ONE PENN PLAZA, 4TH FLOOR,
NEW YORK, NY 10119
CERTIFICATE OF REGISTRATION # EF.2000923

FIRM No: LA – EF. 0003109
Infinity Engineering Consultants, LLC
Civil | Structural | Mechanical | Electrical | Marine | Transportation
Metairie, LA www.infinityec.com 504-304-0548

DATE	03/11/2026	JOB NO.	22-017
DESIGNED BY: L. KELLY			
FILE NAME: M2.01 UNDERGROUND PIPING PLAN.dwg			

SEWERAGE AND WATER BOARD OF NEW ORLEANS

CONTRACT No. 1444

WEST POWER COMPLEX @ CWPT
FUEL OIL DELIVERY SYSTEM

MECHANICAL

UNDERGROUND PIPING PLAN

DR:	R. SCHOUEST
CK:	L. KELLY
AP:	L. KELLY
LAST EDIT:	
SCALE:	AS NOTED
DATE:	03/11/2026

A/E DWG NO. M2.02

DWG. No. 12196-W-24

SET NO: SHEET NO: 11 OF 72

BID PACKAGE - NOT FOR CONSTRUCTION

MATCHLINE DWG M2.02

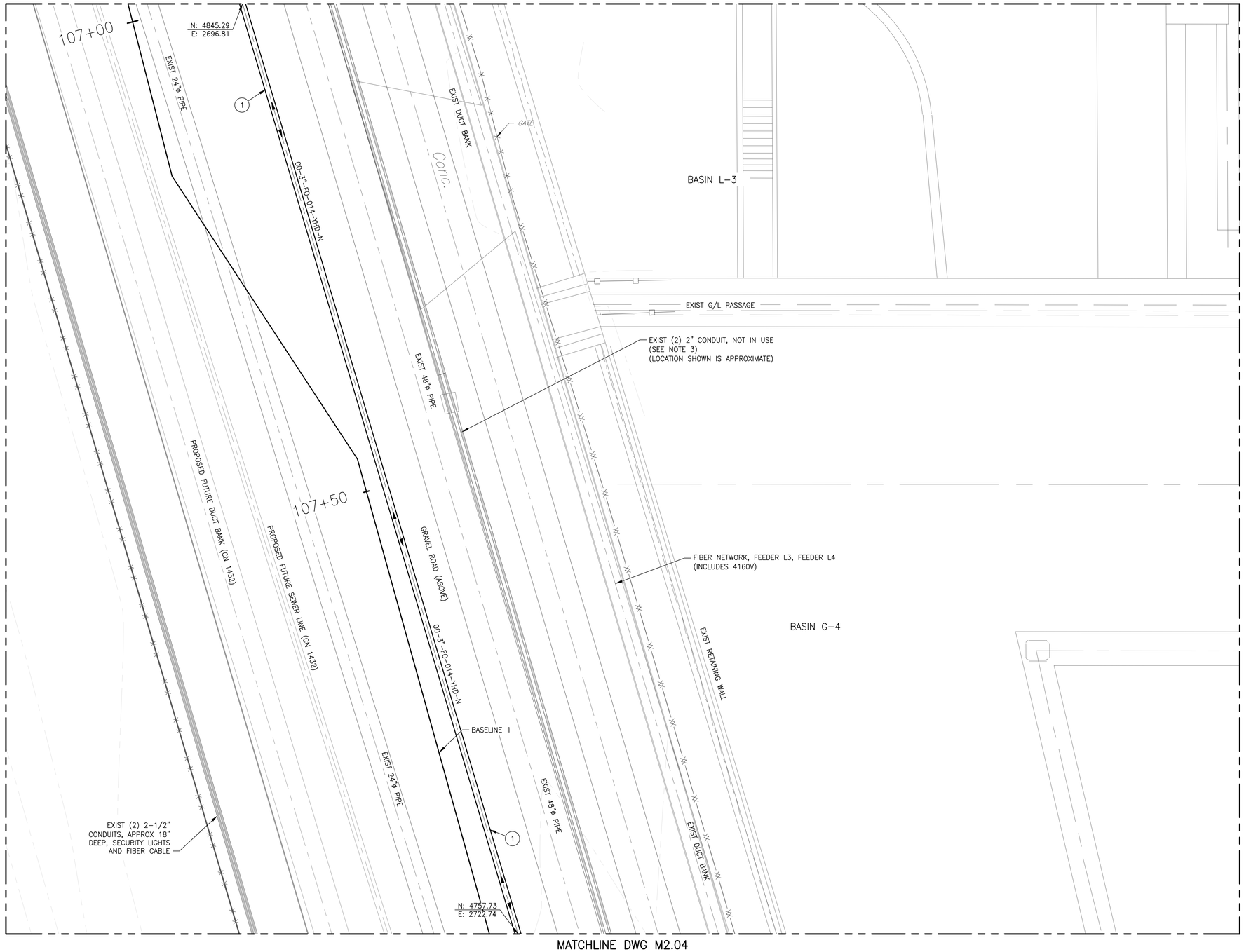

MATCHLINE DWG M2.04

UNDERGROUND PIPING PLAN

SCALE: 1" = 5'

0 5' 10'

SCALE: 1" = 5'

LEGEND		
ITEM#	DESCRIPTION	NPD(IN)
1	PIPE, DOUBLE WALL PIPING WITH LEAK DETECTION, 6" CONTAINMENT PIPE, MATERIAL SPEC YHD	3

NOTES:

1. PIPING SHALL MEET PIPE SPECIFICATIONS NOTED HC01 AND YHD.
2. CONTRACTOR TO VERIFY FINAL GRADE. UNDERGROUND PIPING TO BE MINIMUM 3'-6" BELOW FINAL GRADE UNLESS NOTED OTHERWISE.
3. CONTRACTOR SHALL EXCAVATE CAREFULLY IN THE AREA OF KNOWN CONDUITS AND DUCT BANK TO AVOID DAMAGE. IF CONDUITS OR DUCT BANK ARE DAMAGED DURING CONSTRUCTION, CONTRACTOR SHALL REPAIR.
4. CONTRACTOR SHALL PROVIDE ONE (1) WEEK ADVANCE NOTICE OF PROPOSED POWER OUTAGE REQUESTS IF CROSSING OR WITHIN 10 FEET OF EXISTING ELECTRICAL DUCT BANK. SEE GENERAL NOTES.

REV.	DATE	DESCRIPTION	BY
0	05/01/2026	ISSUED FOR BID	LEK

STATE OF LOUISIANA
LAURA EYMAN KELLY
License No. 39645
PROFESSIONAL ENGINEER
IN
MECHANICAL ENGINEERING
5/1/2026

WSP USA INC.
ONE PENN PLAZA, 9TH FLOOR,
NEW YORK, NY 10119
CERTIFICATE OF REGISTRATION # EF.0000823

Infinity Engineering Consultants, LLC
FIRM No: LA - EF. 0003709
AEC Project No. 22-017
Civil | Structural | Mechanical | Electrical | Marine | Transportation
Metairie, LA www.infinityec.com 504-304-0548

DATE	05/01/2026	JOB NO.	22-017
DESIGNED BY: L. KELLY			
FILE NAME: M2.01 UNDERGROUND PIPING PLAN.dwg			

SEWERAGE AND WATER BOARD OF NEW ORLEANS

CONTRACT No. 1444

WEST POWER COMPLEX @ CWPT
FUEL OIL DELIVERY SYSTEM

MECHANICAL

UNDERGROUND PIPING PLAN

DR:	R. SCHOUEST	A/E DWG NO.	M2.03
CK:	L. KELLY		
AP:	L. KELLY		
LAST EDIT:		DWG. No.	12196-W-24
SCALE:	AS NOTED		
DATE:	05/01/2026	SET NO:	SHEET NO: OF

BID PACKAGE - NOT FOR CONSTRUCTION

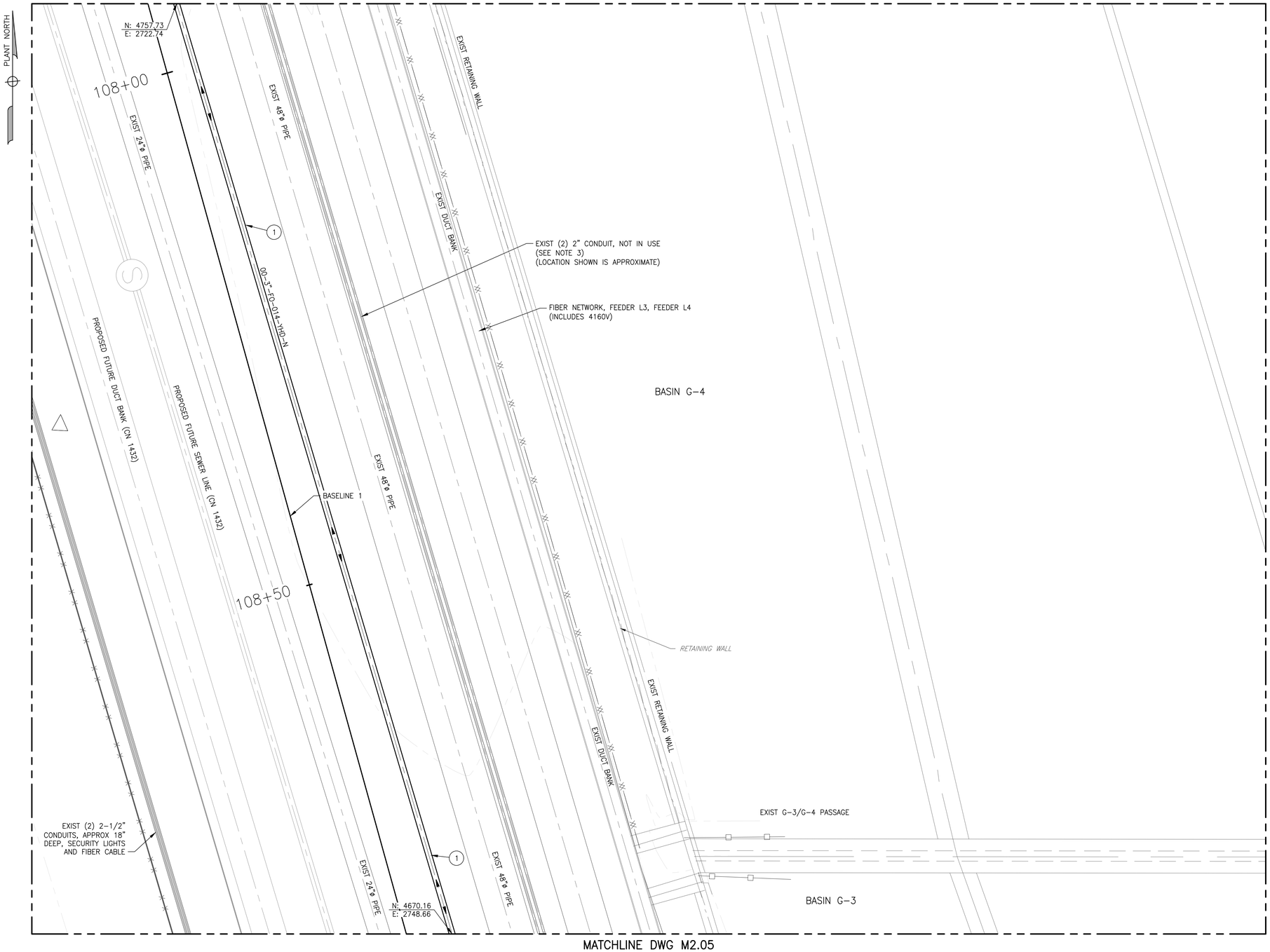

UNDERGROUND PIPING PLAN

SCALE: 1" = 5'

0 5' 10'

SCALE: 1" = 5'

LEGEND		
ITEM#	DESCRIPTION	NPD(IN)
1	PIPE, DOUBLE WALL PIPING WITH LEAK DETECTION, 6" CONTAINMENT PIPE, MATERIAL SPEC YHD	3

NOTES:

1. PIPING SHALL MEET PIPE SPECIFICATIONS NOTED HC01 AND YHD.
2. CONTRACTOR TO VERIFY FINAL GRADE. UNDERGROUND PIPING TO BE MINIMUM 3'-6" BELOW FINAL GRADE UNLESS NOTED OTHERWISE.
3. CONTRACTOR SHALL EXCAVATE CAREFULLY IN THE AREA OF KNOWN CONDUITS AND DUCT BANK TO AVOID DAMAGE. IF CONDUITS OR DUCT BANK ARE DAMAGED DURING CONSTRUCTION, CONTRACTOR SHALL REPAIR.
4. CONTRACTOR SHALL PROVIDE ONE (1) WEEK ADVANCE NOTICE OF PROPOSED POWER OUTAGE REQUESTS IF CROSSING OR WITHIN 10 FEET OF EXISTING ELECTRICAL DUCT BANK. SEE GENERAL NOTES.

REV.	DATE	DESCRIPTION	BY
0	03/11/2026	ISSUED FOR BID	LEK

STATE OF LOUISIANA
LADRA EYMAN KELLY
License No. 39645
PROFESSIONAL ENGINEER
IN
MECHANICAL ENGINEERING
3/11/2026

WSP USA INC.
ONE PENN PLAZA, 5TH FLOOR,
NEW YORK, NY 10119
CERTIFICATE OF REGISTRATION # EF.0000023

FIRM No LA – EF. 0003109
Infinity Engineering Consultants, LLC
Civil | Structural | Mechanical | Electrical | Marine | Transportation
Metairie, LA www.infinityec.com 504-304-0548

DATE	03/11/2026	JOB NO.	22-017
DESIGNED BY: L. KELLY			
FILE NAME: M2.01 UNDERGROUND PIPING PLAN.dwg			

SEWERAGE AND WATER BOARD OF NEW ORLEANS

CONTRACT No. 1444

WEST POWER COMPLEX @ CWPT
FUEL OIL DELIVERY SYSTEM

MECHANICAL

UNDERGROUND PIPING PLAN

DR.	R. SCHOUEST
CK:	L. KELLY
AP:	L. KELLY
LAST EDIT:	
SCALE:	AS NOTED
DATE:	03/11/2026

A/E DWG NO.
M2.04

DWG. No. 12196-W-24

SHEET NO: 13 OF 72

BID PACKAGE - NOT FOR CONSTRUCTION

MATCHLINE DWG M2.04

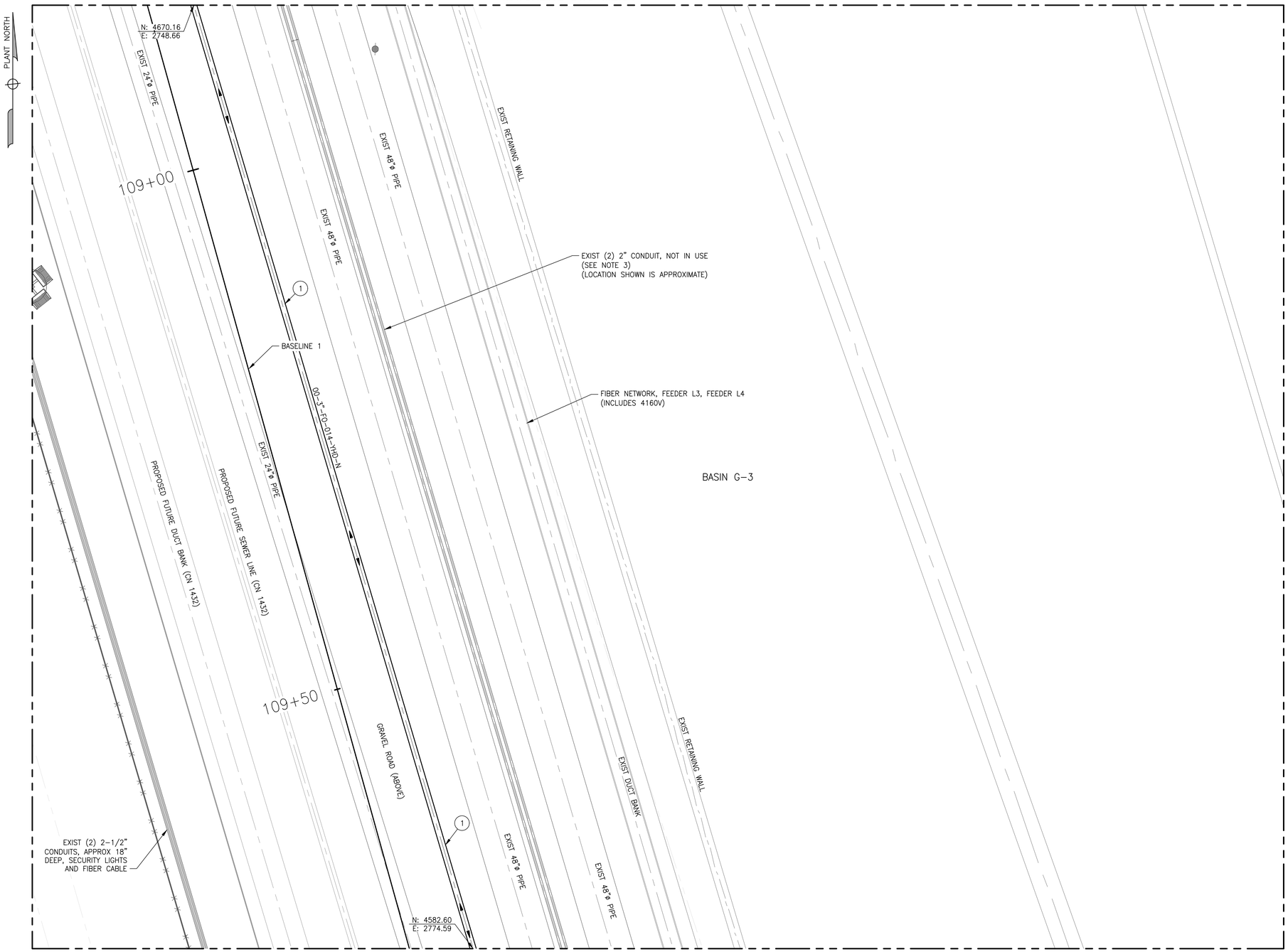

MATCHLINE DWG M2.06

UNDERGROUND PIPING PLAN

SCALE: 1" = 5'

0 5' 10'

SCALE: 1" = 5'

LEGEND		
ITEM#	DESCRIPTION	NPD(IN)
1	PIPE, DOUBLE WALL PIPING WITH LEAK DETECTION, 6" CONTAINMENT PIPE, MATERIAL SPEC YHD	3

NOTES:

1. PIPING SHALL MEET PIPE SPECIFICATIONS NOTED HC01 AND YHD.
2. CONTRACTOR TO VERIFY FINAL GRADE. UNDERGROUND PIPING TO BE MINIMUM 3'-6" BELOW FINAL GRADE UNLESS NOTED OTHERWISE.
3. CONTRACTOR SHALL EXCAVATE CAREFULLY IN THE AREA OF KNOWN CONDUITS AND DUCT BANK TO AVOID DAMAGE. IF CONDUITS OR DUCT BANK ARE DAMAGED DURING CONSTRUCTION, CONTRACTOR SHALL REPAIR.
4. CONTRACTOR SHALL PROVIDE ONE (1) WEEK ADVANCE NOTICE OF PROPOSED POWER OUTAGE REQUESTS IF CROSSING OR WITHIN 10 FEET OF EXISTING ELECTRICAL DUCT BANK. SEE GENERAL NOTES.

REV.	DATE	DESCRIPTION	BY
0	03/11/2026	ISSUED FOR BID	LEK

LADRA EYMAN KELLY
License No. 39645
PROFESSIONAL ENGINEER
IN
MECHANICAL ENGINEERING
STATE OF LOUISIANA
3/11/2026

WSP USA INC.
ONE PENN PLAZA, 5TH FLOOR,
NEW YORK, NY 10119
CERTIFICATE OF REGISTRATION # EF.0000823

Infinity Engineering Consultants, LLC
FIRM No LA – EF. 0003109
IEC Project No. 22-017
Civil | Structural | Mechanical | Electrical | Marine | Transportation
Metairie, LA www.infinityec.com 504-308-0548

SEWERAGE AND WATER BOARD OF NEW ORLEANS

CONTRACT No. 1444
WEST POWER COMPLEX @ CWPT
FUEL OIL DELIVERY SYSTEM

MECHANICAL

UNDERGROUND PIPING PLAN

DR.	R. SCHOUEST
CK:	L. KELLY
AP:	L. KELLY
LAST EDIT:	
SCALE:	AS NOTED
DATE:	03/11/2026
A/E DWG NO.	M2.05
DWG. No.	12196-W-24
SET NO:	SHEET NO: 14 OF 72

DATE	03/11/2026	JOB NO.	22-017
DESIGNED BY: L. KELLY			
FILE NAME: M2.01 UNDERGROUND PIPING PLAN.dwg			

BID PACKAGE - NOT FOR CONSTRUCTION

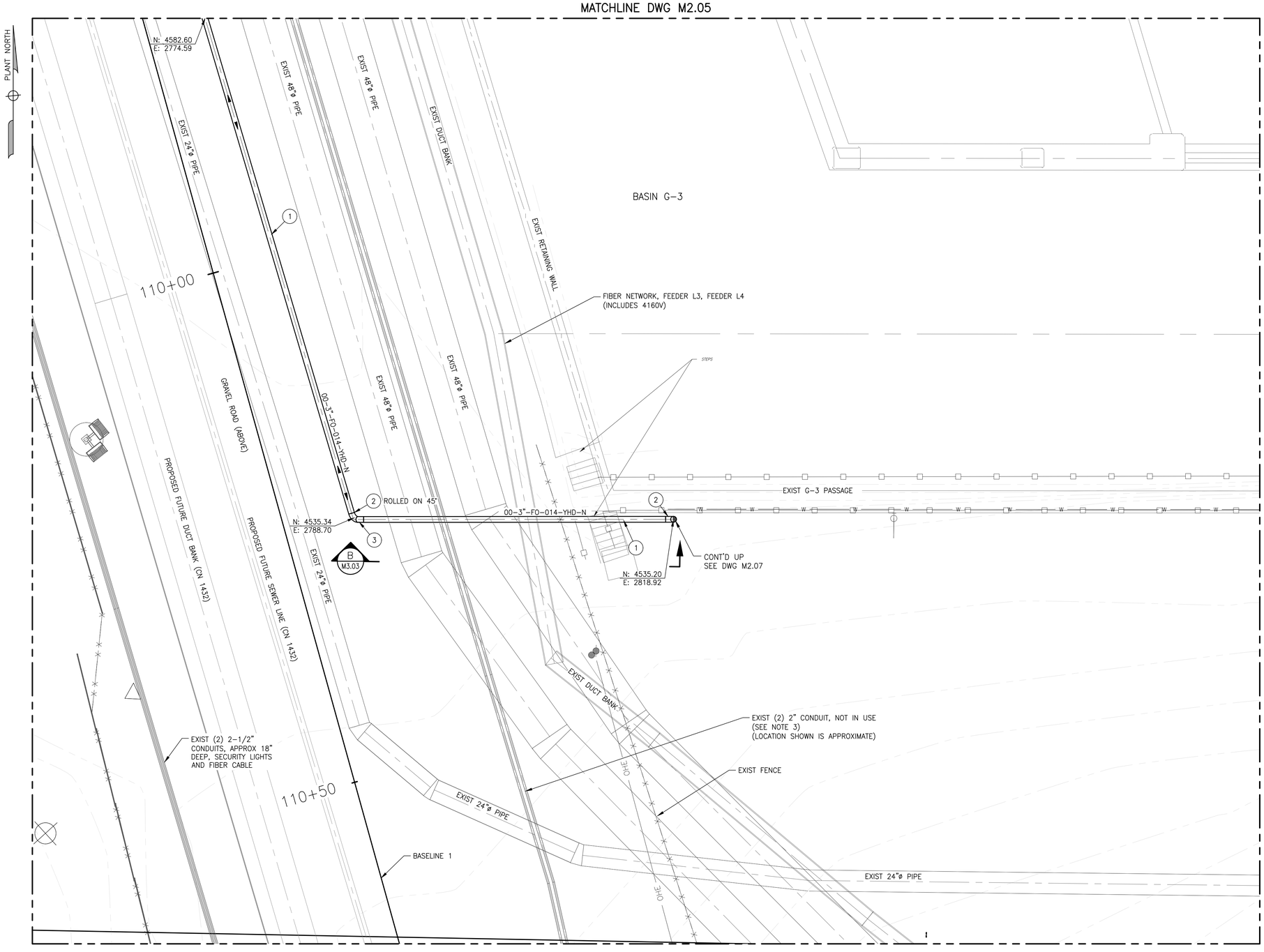

LEGEND		
ITEM#	DESCRIPTION	NPD(IN)
1	PIPE, DOUBLE WALL PIPING WITH LEAK DETECTION, 6" CONTAINMENT PIPE, MATERIAL SPEC YHD	3
2	90° ELBOW, DOUBLE WALL PIPING WITH LEAK DETECTION, 6" CONTAINMENT FITTING, MATERIAL SPEC YHD	3
3	45° ELBOW, SCH STD, CS, BE, ASTM, A234 GR. WPB, ASME B16.9	3

NOTES:

1. PIPING SHALL MEET PIPE SPECIFICATIONS NOTED HC01 AND YHD.
2. CONTRACTOR TO VERIFY FINAL GRADE. UNDERGROUND PIPING TO BE MINIMUM 3'-6" BELOW FINAL GRADE UNLESS NOTED OTHERWISE.
3. CONTRACTOR SHALL EXCAVATE CAREFULLY IN THE AREA OF KNOWN CONDUITS AND DUCT BANK TO AVOID DAMAGE. IF CONDUITS OR DUCT BANK ARE DAMAGED DURING CONSTRUCTION, CONTRACTOR SHALL REPAIR.
4. CONTRACTOR SHALL PROVIDE ONE (1) WEEK ADVANCE NOTICE OF PROPOSED POWER OUTAGE REQUESTS IF CROSSING OR WITHIN 10 FEET OF EXISTING ELECTRICAL DUCT BANK. SEE GENERAL NOTES.

UNDERGROUND PIPING PLAN

SCALE: 1" = 5'

0 5' 10'

SCALE: 1" = 5'

REV.	DATE	DESCRIPTION	BY
0	03/11/2026	ISSUED FOR BID	LEK

LESLIE LYMAN KELLY
License No. 39645
PROFESSIONAL ENGINEER
IN
MECHANICAL ENGINEERING
3/11/2026

WSP USA INC.
ONE PENN PLAZA, 5TH FLOOR,
NEW YORK, NY 10119
CERTIFICATE OF REGISTRATION # EF.2000623

FIRM No LA – EF. 0003109
Infinity Engineering Consultants, LLC
Civil | Structural | Mechanical | Electrical | Marine | Transportation
Metairie, LA www.infinityeci.com 504-304-0548

DATE	03/11/2026	JOB NO.	22-017

DESIGNED BY: L. KELLY
FILE NAME: M2.01 UNDERGROUND PIPING PLAN.dwg

SEWERAGE AND WATER BOARD OF NEW ORLEANS

CONTRACT No. 1444
WEST POWER COMPLEX @ CWPT
FUEL OIL DELIVERY SYSTEM

MECHANICAL

UNDERGROUND PIPING PLAN

DR:	R. SCHOUEST
CK:	L. KELLY
AP:	L. KELLY
LAST EDIT:	
SCALE:	AS NOTED
DATE:	03/11/2026

A/E DWG NO. M2.06

DWG. No. 12196-W-24

SET NO: SHEET NO: 15 OF 72

BID PACKAGE - NOT FOR CONSTRUCTION

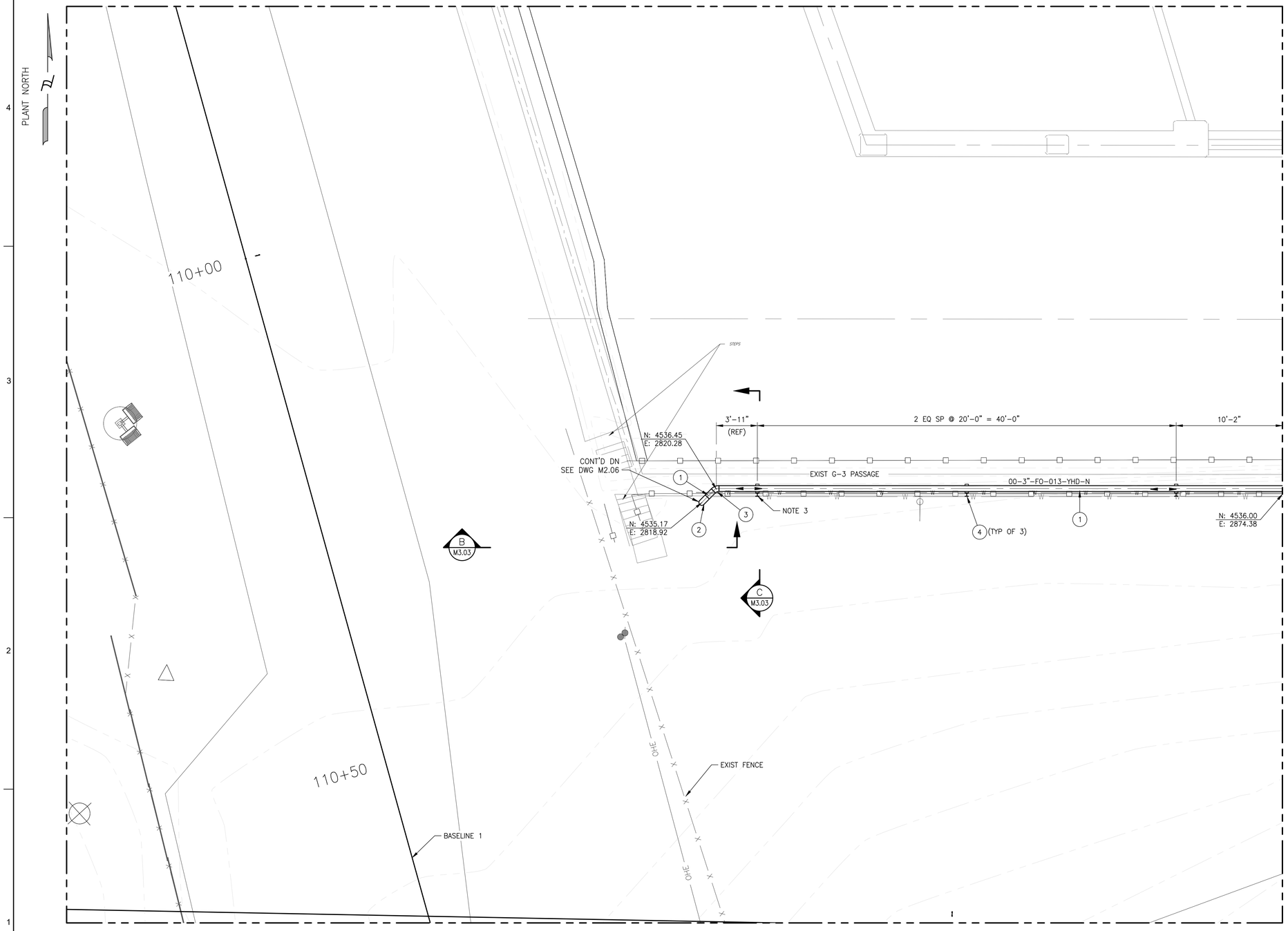

ABOVEGROUND PIPING PLAN

SCALE: 1" = 5'

0 5' 10'

SCALE: 1" = 5'

LEGEND		
ITEM#	DESCRIPTION	NPD(IN)
1	PIPE, DOUBLE WALL PIPING WITH LEAK DETECTION, 6" CONTAINMENT PIPE, MATERIAL SPEC YHD	3
2	90° ELBOW, DOUBLE WALL PIPING WITH LEAK DETECTION, 6" CONTAINMENT FITTING, MATERIAL SPEC YHD	3
3	45° ELBOW, DOUBLE WALL PIPING WITH LEAK DETECTION, 6" CONTAINMENT FITTING, MATERIAL SPEC YHD	3
4	PS-6, SEE DETAIL ON SHT M5.00	

NOTES:

1. PIPING SHALL MEET PIPE SPECIFICATIONS NOTED HC01 AND YHD.
2. CONTRACTOR SHALL PROVIDE ONE (1) WEEK ADVANCE NOTICE OF PROPOSED POWER OUTAGE REQUESTS IF CROSSING OR WITHIN 10 FEET OF EXISTING ELECTRICAL DUCT BANK. SEE GENERAL NOTES.
3. INSTALL PIPE ANCHOR ATTACHED TO CARRIER PIPE AND CONDUIT AND ANCHOR AT SUPPORT ADJACENT TO TURNDOWN BELOW GROUND. COORDINATE WITH DOUBLE WALL PIPE MANUFACTURER.

REV.	DATE	DESCRIPTION	BY
0	03/11/2026	ISSUED FOR BID	LEK

STATE OF LOUISIANA
LESLIE E. KELLY
License No. 39645
PROFESSIONAL ENGINEER
IN
MECHANICAL ENGINEERING
3/11/2026

WSP USA INC.
ONE PENN PLAZA, 4TH FLOOR,
NEW YORK, NY 10119
CERTIFICATE OF REGISTRATION # EF.0005623

FIRM No: LA – EF. 0003109
Infinity Engineering Consultants, LLC
Civil | Structural | Mechanical | Electrical | Interiors | Transportation
Metairie, LA www.infinityec.com 504-304-0548

DATE	03/11/2026	JOB NO.	22-017
DESIGNED BY: L. KELLY			
FILE NAME: M2.07 ABOVEGROUND PIPING PLAN.dwg			

SEWERAGE AND WATER BOARD OF NEW ORLEANS

CONTRACT No. 1444

WEST POWER COMPLEX @ CWPT
FUEL OIL DELIVERY SYSTEM

MECHANICAL

ABOVEGROUND PIPING PLAN

DR:	R. SCHOUEST
CK:	L. KELLY
AP:	L. KELLY
LAST EDIT:	
SCALE:	AS NOTED
DATE:	03/11/2026

A/E DWG NO. M2.07

DWG. No. 12196-W-24

SET NO: SHEET NO: 16 OF 72

BID PACKAGE - NOT FOR CONSTRUCTION

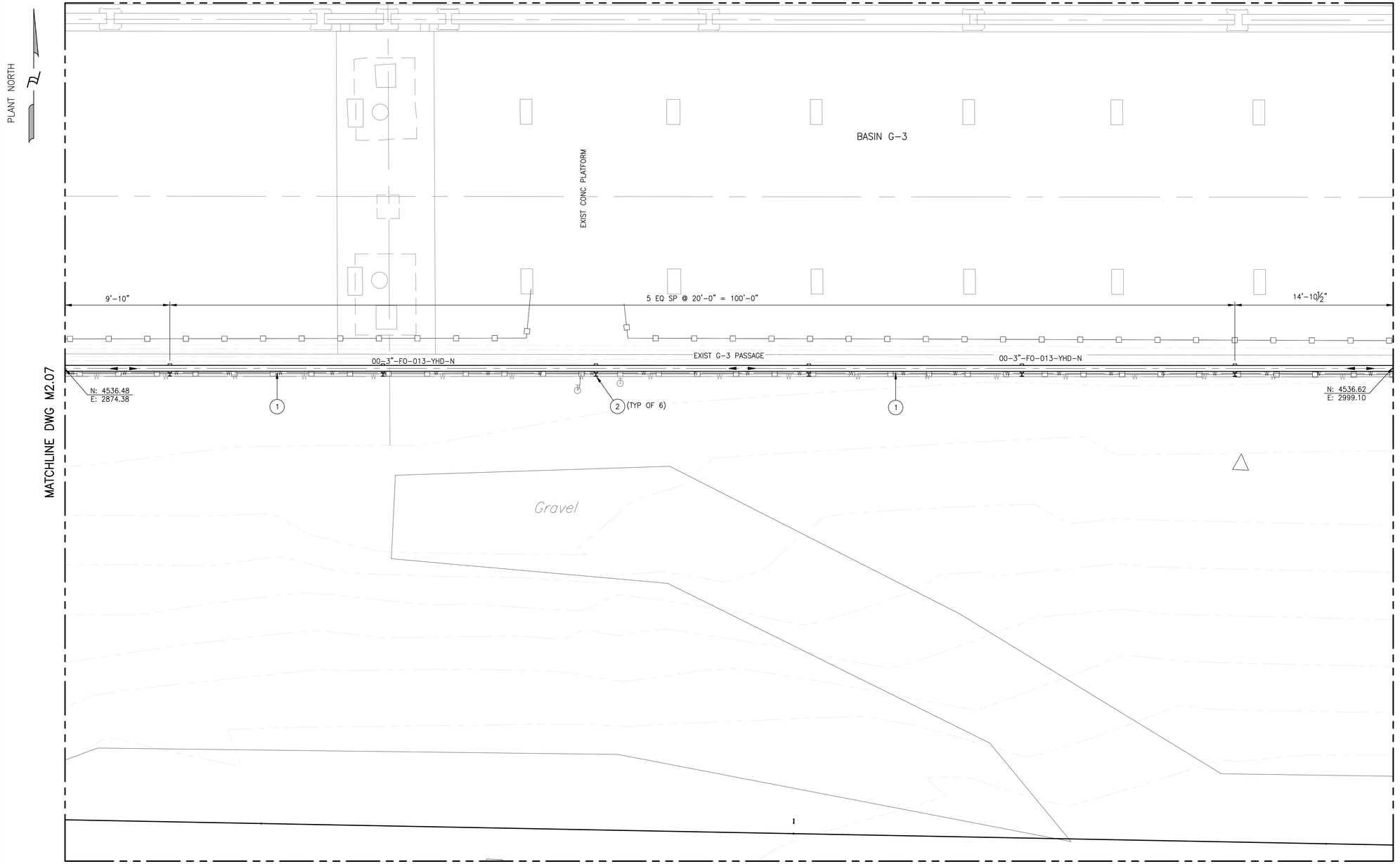

ABOVEGROUND PIPING PLAN

SCALE: 1" = 5'

0 5' 10'

SCALE: 1" = 5'

LEGEND		
ITEM#	DESCRIPTION	NPD(IN)
1	PIPE, DOUBLE WALL PIPING WITH LEAK DETECTION, 6" CONTAINMENT PIPE, MATERIAL SPEC YHD	3
2	PS-6, SEE DETAIL ON SHT M5.00	

NOTE:

1. PIPING SHALL MEET PIPE SPECIFICATIONS NOTED HC01 AND YHD.

REV:	DATE	DESCRIPTION	BY
0	03/11/2026	ISSUED FOR BID	LEK

STATE OF LOUISIANA
LARA E. KELLY
License No. 39645
PROFESSIONAL ENGINEER
IN
MECHANICAL ENGINEERING
3/11/2026

WSP USA INC.
ONE PENN PLAZA, 4TH FLOOR,
NEW YORK, NY 10119
CERTIFICATE OF REGISTRATION # EF.2000923

FIRM No LA – EF. 0003109
Infinity Engineering Consultants, LLC
(IEC Project No. 25-047)
Civil | Structural | Mechanical | Electrical | Marine | Transportation
Metairie, LA www.infinityec.com 504-304-0548

SEWERAGE AND WATER BOARD OF NEW ORLEANS

CONTRACT No. 1444

WEST POWER COMPLEX @ CWPT
FUEL OIL DELIVERY SYSTEM

MECHANICAL

ABOVEGROUND PIPING PLAN

DR.	R. SCHOUEST
CK:	L. KELLY
AP:	L. KELLY
LAST EDIT:	
SCALE:	AS NOTED
DATE:	03/11/2026

A/E DWG NO.
M2.08

DWG. No. 12196-W-24

SET NO: SHEET NO: 17 OF 72

DATE	03/11/2026	JOB NO.	22-017

DESIGNED BY: L. KELLY
FILE NAME: M2.07 ABOVEGROUND PIPING PLAN.dwg

BID PACKAGE - NOT FOR CONSTRUCTION

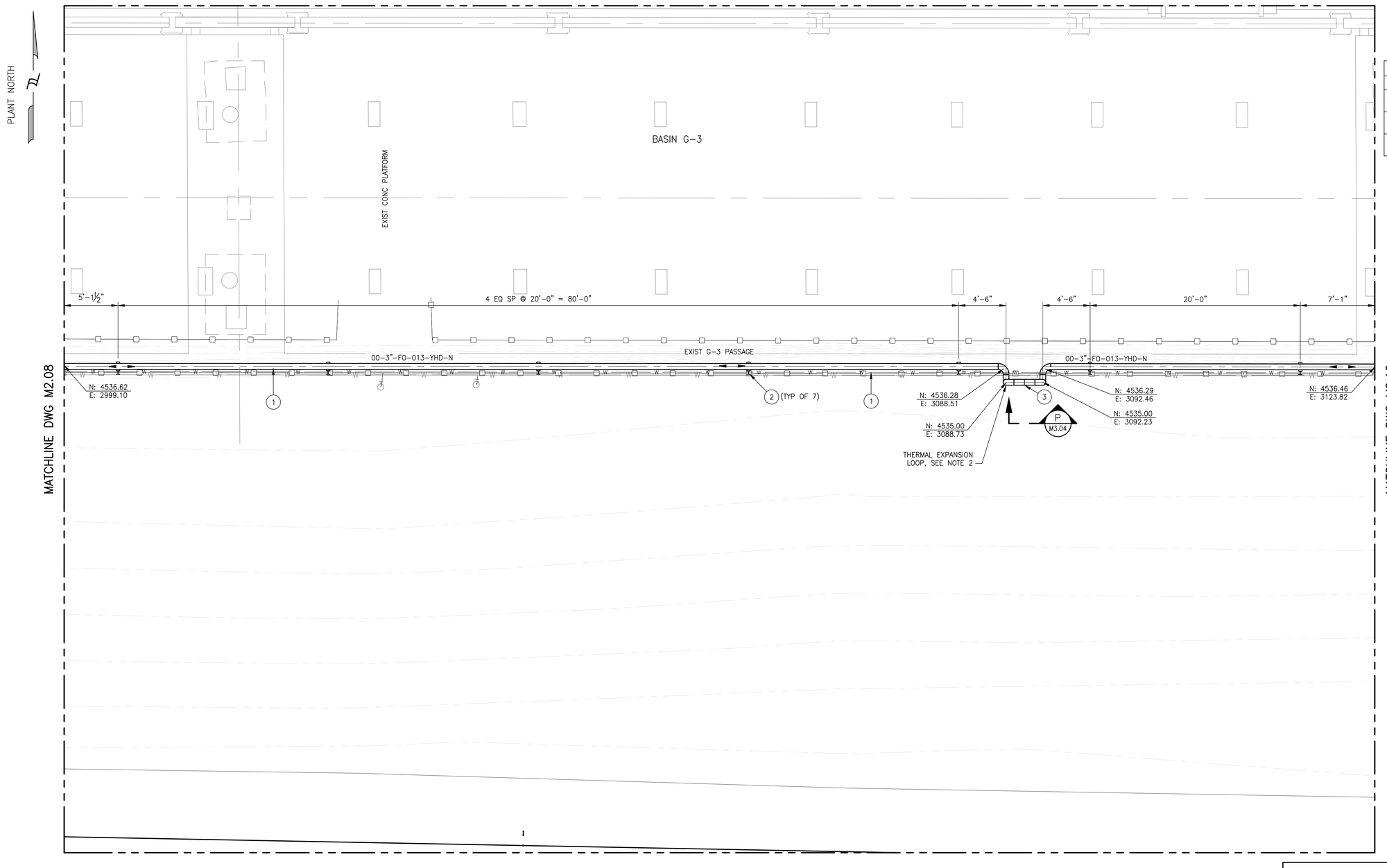

ABOVEGROUND PIPING PLAN

SCALE: 1" = 5'

0 5' 10'

SCALE: 1" = 5'

LEGEND		
ITEM#	DESCRIPTION	NPD(IN)
1	PIPE, DOUBLE WALL PIPING WITH LEAK DETECTION, 6" CONTAINMENT PIPE, MATERIAL SPEC YHD	3
2	PS-6, SEE DETAIL ON SHT M5.00	
3	PS-7, SEE DETAIL ON SHT M5.00	

NOTE:

1. PIPING SHALL MEET PIPE SPECIFICATIONS NOTED HC01 AND YHD.
2. SPACERS SHOULD NOT BE INSTALLED IN ELBOWS AND VERTICAL SEGMENTS OF THERMAL EXPANSION LOOP.

REV.	DATE	DESCRIPTION	BY
0	03/11/2026	ISSUED FOR BID	LEK

STATE OF LOUISIANA
LAURA LYMAN KELLY
License No. 39645
PROFESSIONAL ENGINEER
IN
MECHANICAL ENGINEERING
3/11/2026

SEWERAGE AND WATER BOARD OF NEW ORLEANS

CONTRACT No. 1444

WEST POWER COMPLEX @ CWPT
FUEL OIL DELIVERY SYSTEM

MECHANICAL

ABOVEGROUND PIPING PLAN

WSP USA INC.
ONE PENN PLAZA, 47TH FLOOR,
NEW YORK, NY 10119
CERTIFICATE OF AUTHORIZATION # EF.0000623

FIRM No: LA – EF. 0003709
Infinity Engineering Consultants, LLC
Civil | Structural | Mechanical | Electrical | Marine | Transportation
Metairie, LA www.infinityec.com 504-304-0548

DATE	03/11/2026
JOB NO.	22-017
DESIGNED BY:	L. KELLY
FILE NAME:	M2.07 ABOVEGROUND PIPING PLAN.dwg

DR:	R. SCHOUEST
CK:	L. KELLY
AP:	L. KELLY
LAST EDIT:	
SCALE:	AS NOTED
DATE:	03/11/2026

A/E DWG NO. M2.09

DWG. No. 12196-W-24

SHEET NO: 18 OF 72

BID PACKAGE - NOT FOR CONSTRUCTION

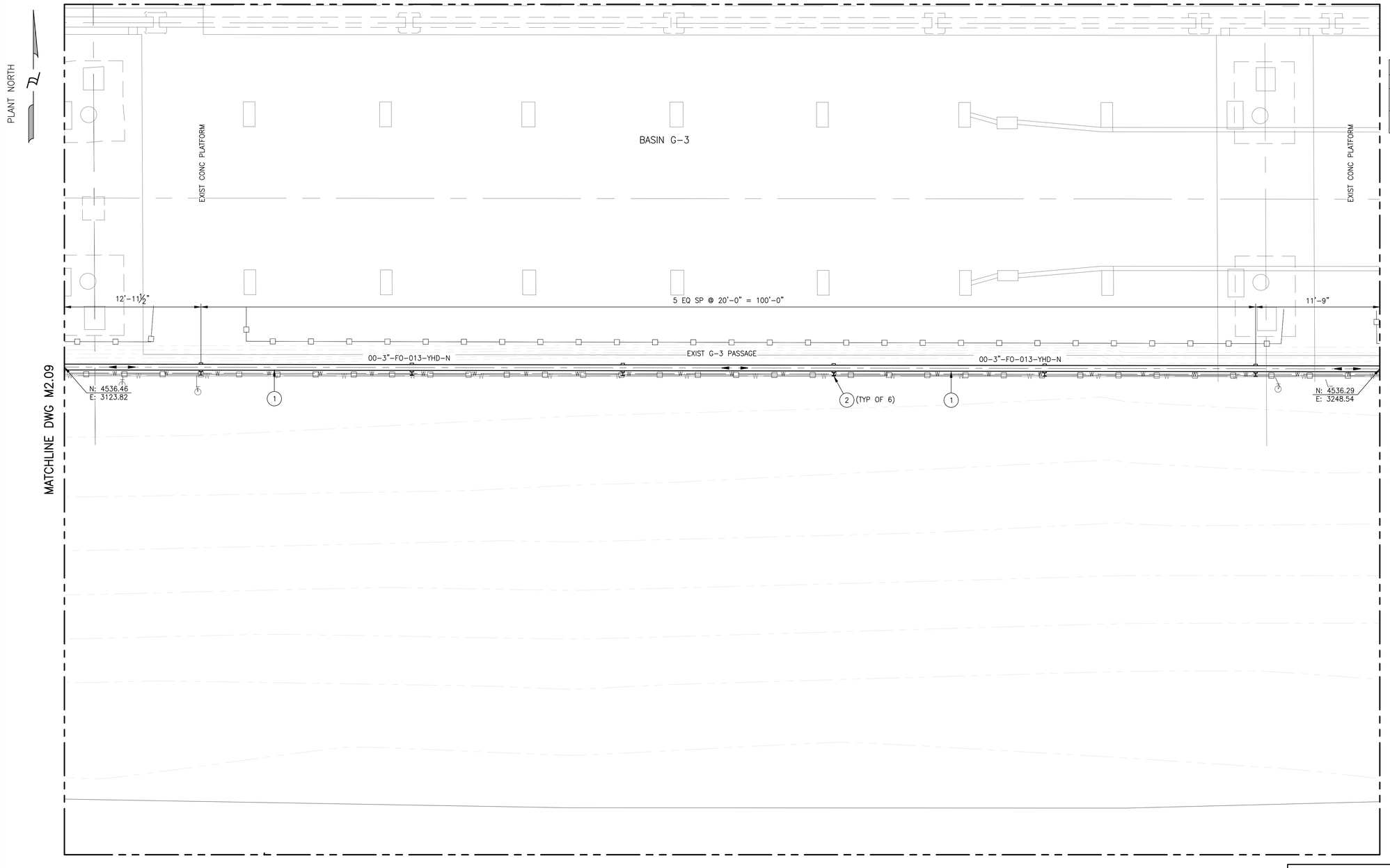

LEGEND		
ITEM#	DESCRIPTION	NPD(IN)
1	PIPE, DOUBLE WALL PIPING WITH LEAK DETECTION, 6" CONTAINMENT PIPE, MATERIAL SPEC YHD	3
2	PS-6, SEE DETAIL ON SHT M5.00	

NOTE:

1. PIPING SHALL MEET PIPE SPECIFICATIONS NOTED HC01 AND YHD.

ABOVEGROUND PIPING PLAN

SCALE: 1" = 5'

0 5' 10'

SCALE: 1" = 5'

REV.	DATE	DESCRIPTION	BY
0	03/11/2026	ISSUED FOR BID	LEK

STATE OF LOUISIANA
LAURA LYMAN KELLY
License No. 39645
PROFESSIONAL ENGINEER
IN
MECHANICAL ENGINEERING
3/11/2026

WSP USA Inc.
ONE PENN PLAZA, 47TH FLOOR,
NEW YORK, NY 10119
CERTIFICATE OF AUTHORIZATION # EF.0000623

Infinity Engineering Consultants, LLC
FIRM No: LA – EF. 0003709
Civil | Structural | Mechanical | Electrical | Marine | Transportation
Metairie, LA www.infinityec.com 504-304-0548

DATE	03/11/2026	JOB NO.	22-017

DESIGNED BY: L. KELLY
FILE NAME: M2.07 ABOVEGROUND PIPING PLAN.dwg

SEWERAGE AND WATER BOARD OF NEW ORLEANS

CONTRACT No. 1444

WEST POWER COMPLEX @ CWPT
FUEL OIL DELIVERY SYSTEM

MECHANICAL

ABOVEGROUND PIPING PLAN

DR:	R. SCHOUEST
CK:	L. KELLY
AP:	L. KELLY
LAST EDIT:	
SCALE:	AS NOTED
DATE:	03/11/2026

A/E DWG NO. M2.10

DWG. No. 12196-W-24

SET NO: SHEET NO: 19 OF 72

BID PACKAGE - NOT FOR CONSTRUCTION

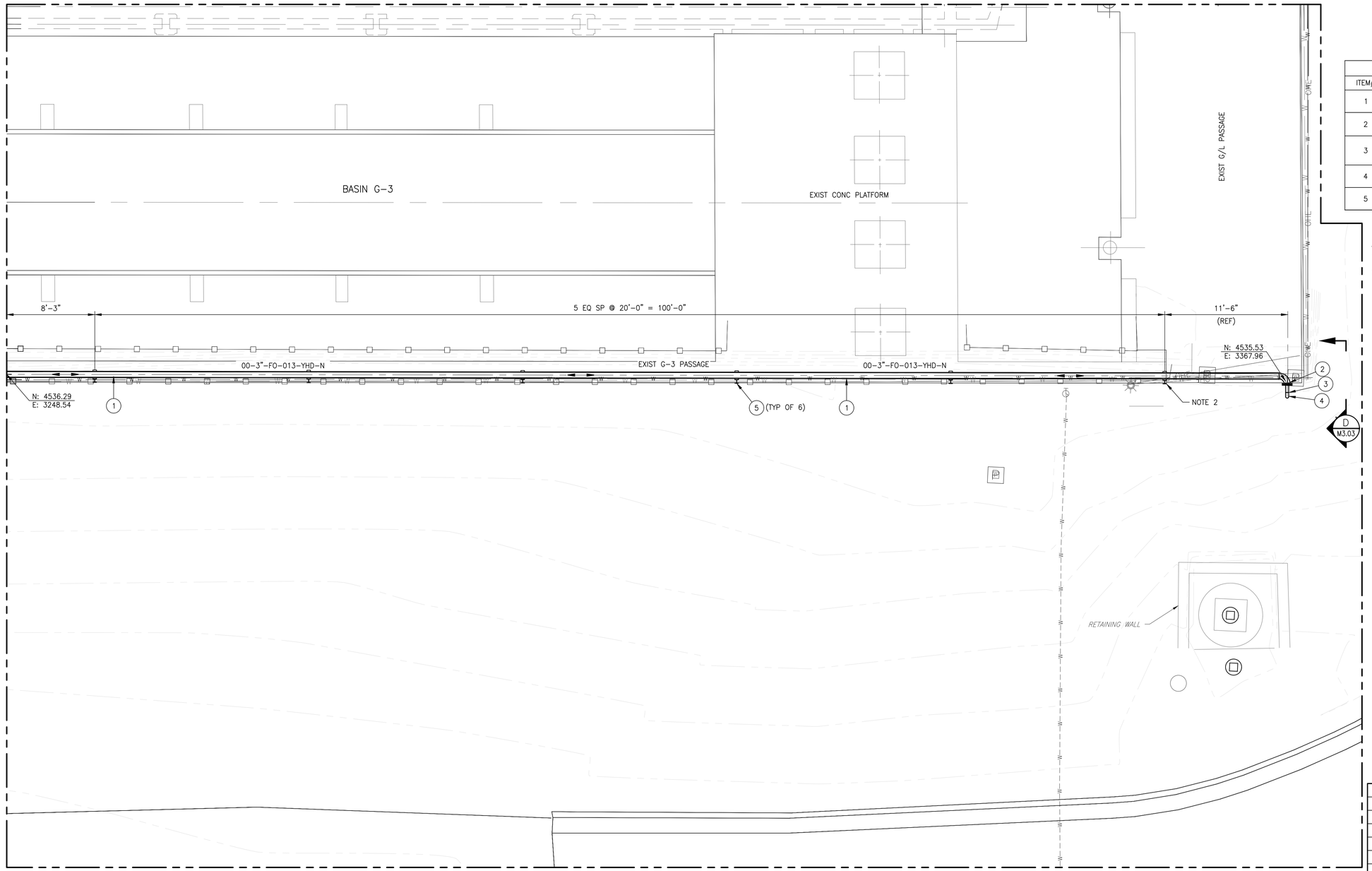

ABOVEGROUND PIPING PLAN

SCALE: 1" = 5'

0 5' 10'

SCALE: 1" = 5'

LEGEND		
ITEM#	DESCRIPTION	NPD(IN)
1	PIPE, DOUBLE WALL PIPING WITH LEAK DETECTION, 6" CONTAINMENT PIPE, MATERIAL SPEC YHD	3
2	90° ELBOW, DOUBLE WALL PIPING WITH LEAK DETECTION, 6" CONTAINMENT FITTING, MATERIAL SPEC YHD	3
3	FLANGE TERMINATION, DOUBLE WALL PIPING WITH LEAK DETECTION, 6" CONTAINMENT FITTING, MATERIAL SPEC YHD	3
4	90° ELBOW, SCH STD, CS, BE, ASTM A234 GR, WPB, ASME B16.9	3
5	PS-6, SEE DETAIL ON SHT M5.00	

NOTE:

1. PIPING SHALL MEET PIPE SPECIFICATIONS NOTED HC01 AND YHD.
2. INSTALL PIPE ANCHOR ATTACHED TO CARRIER PIPE AND CONDUIT AND ANCHOR AT SUPPORT ADJACENT TO TURNDOWN BELOW GROUND. COORDINATE WITH DOUBLE WALL PIPE MANUFACTURER.

REV.	DATE	DESCRIPTION	BY
0	03/11/2026	ISSUED FOR BID	LEK

STATE OF LOUISIANA
LAURA LYMAN KELLY
License No. 39645
PROFESSIONAL ENGINEER
IN
MECHANICAL ENGINEERING
3/11/2026

WSP USA INC.
ONE PENN PLAZA, 4TH FLOOR,
NEW YORK, NY 10119
CERTIFICATE OF AUTHORIZATION # EF.0000623

FIRM No: LA – EF. 0003709
Infinity Engineering Consultants, LLC
Civil | Structural | Mechanical | Electrical | Marine | Transportation
Metairie, LA www.infinityec.com 504-304-0548

DATE	03/11/2026	JOB NO.	22-017

DESIGNED BY: L. KELLY
FILE NAME: M2.07 ABOVEGROUND PIPING PLAN.dwg

SEWERAGE AND WATER BOARD OF NEW ORLEANS

CONTRACT No. 1444

WEST POWER COMPLEX @ CWPT
FUEL OIL DELIVERY SYSTEM

MECHANICAL

ABOVEGROUND PIPING PLAN

DR:	R. SCHOUEST
CK:	L. KELLY
AP:	L. KELLY
LAST EDIT:	
SCALE:	AS NOTED
DATE:	03/11/2026

A/E DWG NO. M2.11

DWG. No. 12196-W-24

SET NO: SHEET NO: 20 OF 72

BID PACKAGE - NOT FOR CONSTRUCTION

LEGEND		
ITEM#	DESCRIPTION	NPD(IN)
1	PIPE, SCH STD, CS, BE, ASTM A53 GR. B, ASME B36.10M	3
2	90° ELBOW, SCH STD, CS, BE, ASTM A234 GR. WPB, ASME B16.9	3
3	45° ELBOW, SCH STD, CS, BE, ASTM, A234 GR. WPB, ASME B16.9	3

NOTES:

1. PIPING SHALL MEET PIPE SPECIFICATIONS NOTED HC01 AND YHD.
2. CONTRACTOR TO VERIFY FINAL GRADE. UNDERGROUND PIPING TO BE MINIMUM 3'–6" BELOW FINAL GRADE UNLESS NOTED OTHERWISE.
3. CONTRACTOR SHALL PROVIDE ONE (1) WEEK ADVANCE NOTICE OF PROPOSED POWER OUTAGE REQUESTS IF CROSSING OR WITHIN 10 FEET OF EXISTING ELECTRICAL DUCT BANK. SEE GENERAL NOTES.

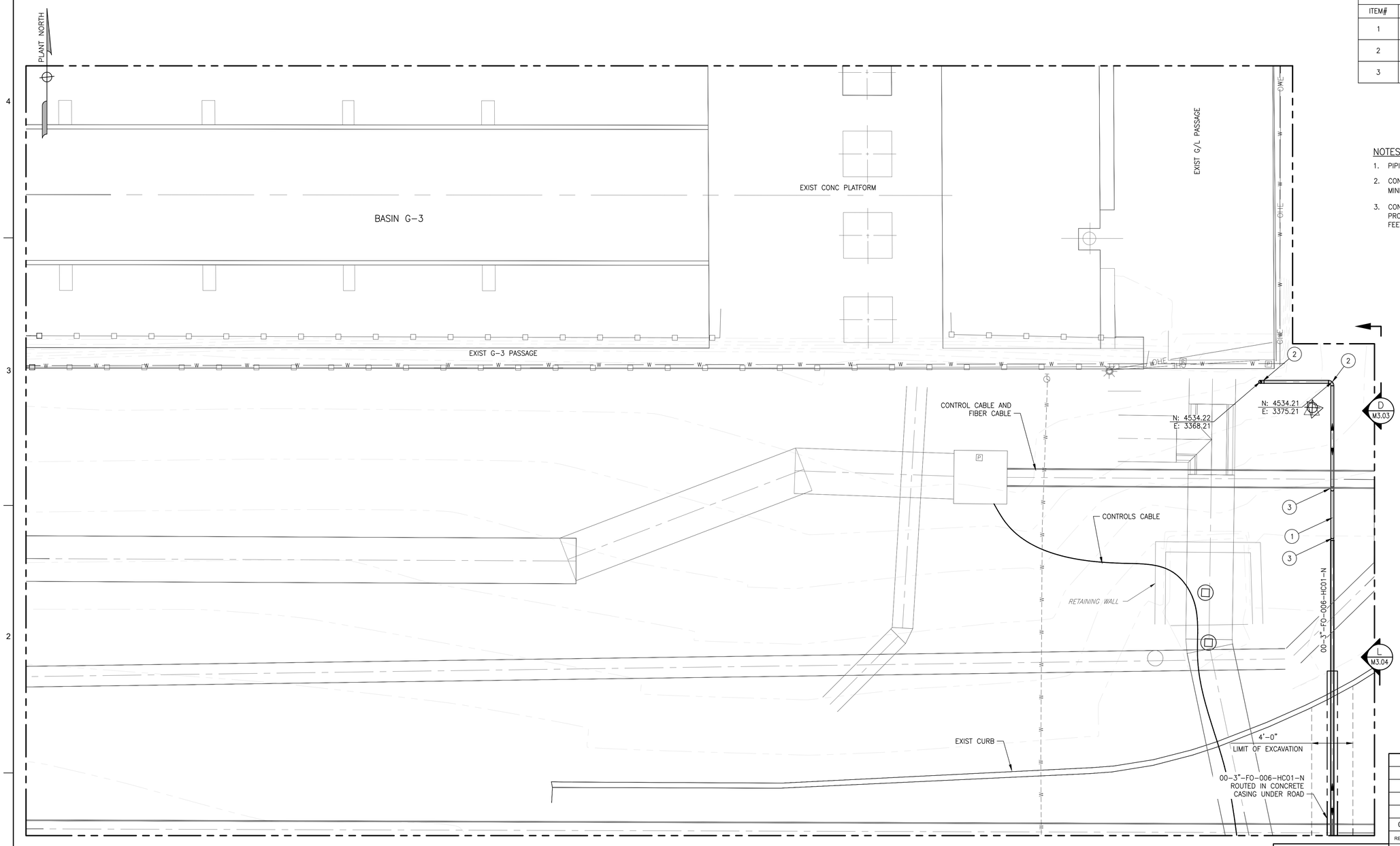

MATCHLINE DWG M2.13

UNDERGROUND PIPING PLAN

SCALE: 1" = 5'

0 5' 10'

SCALE: 1" = 5'

REV.	DATE	DESCRIPTION	BY
0	03/11/2026	ISSUED FOR BID	LEK

STATE OF LOUISIANA
LAURA LYMAN KELLY
License No. 39645
PROFESSIONAL ENGINEER
IN
MECHANICAL ENGINEERING
3/11/2026

WSP USA INC.
ONE PENN PLAZA, 4TH FLOOR
NEW YORK, NY 10119
CERTIFICATE OF REGISTRATION # EF.0000023

Infinity Engineering Consultants, LLC
FIRM No: LA – EF. 0003709
Civil | Structural | Mechanical | Electrical | Marine | Transportation
Metairie, LA www.infinityec.com 504-304-0548

DATE	03/11/2026	JOB NO.	22-017

DESIGNED BY: L. KELLY
FILE NAME: M2.01 UNDERGROUND PIPING PLAN.dwg

SEWERAGE AND WATER BOARD OF NEW ORLEANS

CONTRACT No. 1444

WEST POWER COMPLEX @ CWPT
FUEL OIL DELIVERY SYSTEM

MECHANICAL

UNDERGROUND PIPING PLAN

DR:	R. SCHOUEST
CK:	L. KELLY
AP:	L. KELLY
LAST EDIT:	
SCALE:	AS NOTED
DATE:	03/11/2026

A/E DWG NO.: M2.12

DWG. No. 12196-W-24

SET NO: SHEET NO: 21 OF 72

BID PACKAGE - NOT FOR CONSTRUCTION

MATCHLINE DWG M2.12

PLANT NORTH

HAMILTON SUBSTATION, MACHINE SHOP 1, MACHINE SHOP 2, CHEMICAL HOUSE 1, CHEMICAL HOUSE 2, (NOTES 3,4)

4'-0" LIMIT OF EXCAVATION

N: 4490.23
E: 3375.21

00-3"-FO-006-HC01-N ROUTED IN CONCRETE CASING UNDER ROAD

ELECTRICAL MANHOLE UNDERNEATH ASPHALT

EXIST CURB

00-3"-FO-006-HC01-N

M M3.04

L M3.04

N: 4477.55
E: 3375.21

N: 4477.52
E: 3416.37

HAMILTON SUBSTATION, WAREHOUSE FEEDER FROM SYCAMORE

GRATE INLET TOP=2.87'

CATCH BASIN TOP=0.20'

00-3"-FO-006-HC01-N

GRATE INLET
TOP=-0.70'
INV.=-4.02'
INV.=-3.88'

EXIST FENCE

EXIST POLE (SEE NOTE 5)

OHE

EXIST FENCE

N: 4409.14
E: 3416.35

SODIUM HYPOCHLORITE FEED BUILDING

SODIUM HYPOCHLORITE STORAGE/FEED FACILITY

T-5

T-6

ABOVEGROUND STORAGE TANK

MATCHLINE DWG M2.14

UNDERGROUND PIPING PLAN

SCALE: 1" = 5'

0 5' 10'

SCALE: 1" = 5'

LEGEND		
ITEM#	DESCRIPTION	NPD(IN)
1	PIPE, SCH STD, CS, BE, ASTM A53 GR. B, ASME B36.10M	3
2	90° ELBOW, SCH STD, CS, BE, ASTM A234 GR. WPB, ASME B16.9	3

NOTES:

1. PIPING SHALL MEET PIPE SPECIFICATIONS NOTED HC01 AND YHD.
2. CONTRACTOR TO VERIFY FINAL GRADE. UNDERGROUND PIPING TO BE MINIMUM 3'-6" BELOW FINAL GRADE UNLESS NOTED OTHERWISE.
3. CONTRACTOR SHALL PROVIDE ONE (1) WEEK ADVANCE NOTICE OF PROPOSED POWER OUTAGE REQUESTS IF CROSSING OR WITHIN 10 FEET OF EXISTING ELECTRICAL DUCT BANK. SEE GENERAL NOTES.
4. CONTRACTOR SHALL PROVIDE TEMPORARY POWER TO HAMILTON SUBSTATION DURING REQUESTED POWER OUTAGE.
5. EXISTING POLE INCLUDES CONDUIT THAT TRANSITIONS UNDERGROUND. CONTRACTOR SHALL EXPOSE AND PROTECT CONDUIT DURING INSTALLATION OF FUEL OIL LINE IN VICINITY OF POLE.

REV.	DATE	DESCRIPTION	BY
0	03/11/2026	ISSUED FOR BID	LEK

STATE OF LOUISIANA
LAURA LEMAN KELLY
License No. 39645
PROFESSIONAL ENGINEER
IN
MECHANICAL ENGINEERING
3/11/2026

WSP USA INC.
ONE PENN PLAZA, 9TH FLOOR,
NEW YORK, NY 10119
CERTIFICATE OF REGISTRATION # EF.2000923

FIRM No LA - EF. 0003109
Infinity Engineering Consultants, LLC
Civil | Structural | Mechanical | Electrical | Marine | Transportation
Metairie, LA www.infinityec.com 504-304-0548

DATE	03/11/2026
JOB NO.	22-017
DESIGNED BY:	L. KELLY
FILE NAME:	M2.01 UNDERGROUND PIPING PLAN.dwg

SEWERAGE AND WATER BOARD OF NEW ORLEANS

CONTRACT No. 1444

WEST POWER COMPLEX @ CWPT
FUEL OIL DELIVERY SYSTEM

MECHANICAL

UNDERGROUND PIPING PLAN

DR:	R. SCHOUEST
CK:	L. KELLY
AP:	L. KELLY
LAST EDIT:	
SCALE:	AS NOTED
DATE:	03/11/2026

A/E DWG NO. M2.13

DWG. No. 12196-W-24

SET NO: SHEET NO: 22 OF 72

BID PACKAGE - NOT FOR CONSTRUCTION

MATCHLINE DWG M2.13

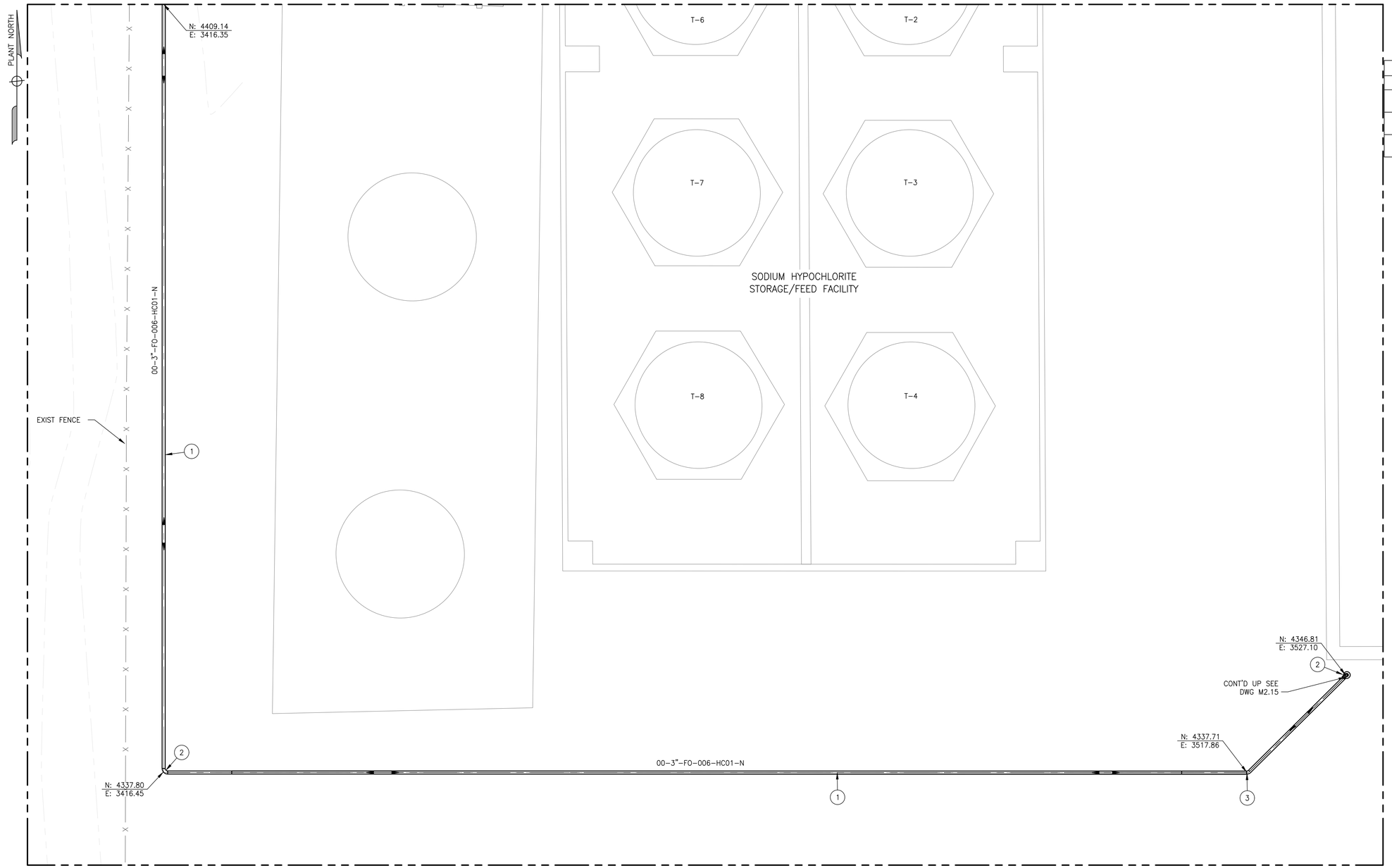

LEGEND		
ITEM#	DESCRIPTION	NPD(IN)
1	PIPE, SCH STD, CS, BE, ASTM A53 GR. B, ASME B36.10M	3
2	90° ELBOW, SCH STD, CS, BE, ASTM A234 GR. WPB, ASME B16.9	3
3	45° ELBOW, SCH STD, CS, BE, ASTM A234 GR. WPB, ASME B16.9	3

NOTES:

1. PIPING SHALL MEET PIPE SPECIFICATIONS NOTED HC01 AND YHD.
2. CONTRACTOR TO VERIFY FINAL GRADE. UNDERGROUND PIPING TO BE MINIMUM 3'-6" BELOW FINAL GRADE UNLESS NOTED OTHERWISE.
3. CONTRACTOR SHALL PROVIDE ONE (1) WEEK ADVANCE NOTICE OF PROPOSED POWER OUTAGE REQUESTS IF CROSSING OR WITHIN 10 FEET OF EXISTING ELECTRICAL DUCT BANK. SEE GENERAL NOTES.

MATCHLINE DWG M2.15

UNDERGROUND PIPING PLAN

SCALE: 1" = 5'

0 5' 10'

SCALE: 1" = 5'

REV.	DATE	DESCRIPTION	BY
0	03/11/2026	ISSUED FOR BID	LEK

STATE OF LOUISIANA
LESLIE E. KELLY
License No. 39645
PROFESSIONAL ENGINEER
IN
MECHANICAL ENGINEERING
3/11/2026

wsp
WSP USA INC.
ONE PENN PLAZA, 4TH FLOOR,
NEW YORK, NY 10119
CERTIFICATE OF REGISTRATION # EF.2000923

Infinity Engineering Consultants, LLC
FIRM No LA – EF. 0003109
Civil | Structural | Mechanical | Electrical | Marine | Transportation
Metairie, LA www.infinityec.com 504-304-0548

SEWERAGE AND WATER BOARD OF NEW ORLEANS

CONTRACT No. 1444

WEST POWER COMPLEX @ CWPT
FUEL OIL DELIVERY SYSTEM

MECHANICAL

UNDERGROUND PIPING PLAN

DR.	R. SCHOUEST
CK:	L. KELLY
AP:	L. KELLY
LAST EDIT:	
SCALE:	AS NOTED
DATE:	03/11/2026

A/E DWG NO. M2.14

DWG. No. 12196-W-24

SET NO: SHEET NO: 23 OF 72

DATE	03/11/2026	JOB NO.	22-017

DESIGNED BY: L. KELLY

FILE NAME: M2.01 UNDERGROUND PIPING PLAN.dwg

BID PACKAGE - NOT FOR CONSTRUCTION

PLANT NORTH

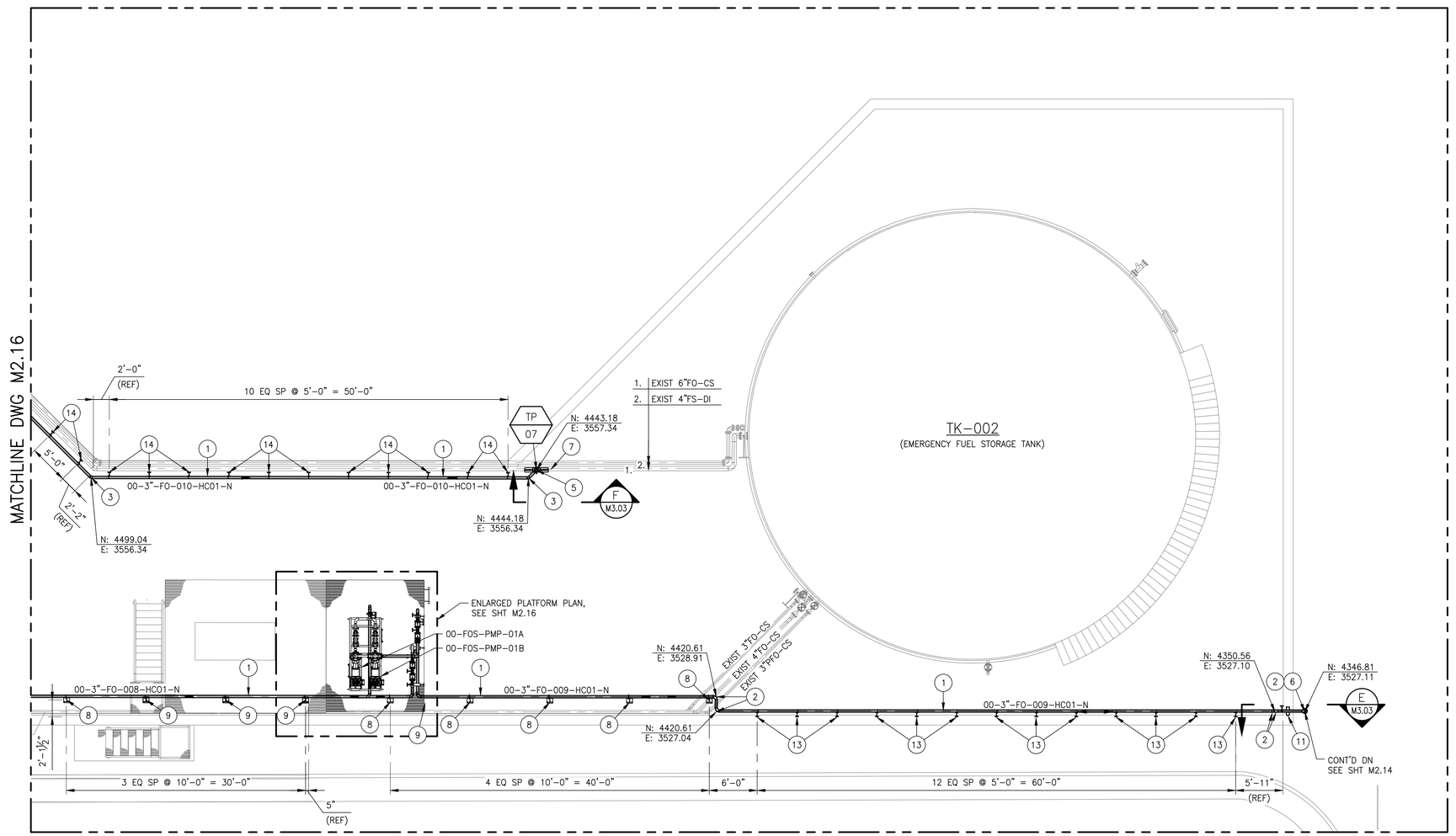

MATCHLINE DWG M2.14

LEGEND		
ITEM#	DESCRIPTION	NPD(IN)
1	PIPE, SCH STD, CS, BE, ASTM A53 Gr. B, ASME B36.10M	3
2	90° ELBOW, SCH STD, CS, BE, ASTM A234 GR. WPB, ASME B16.9	3
3	45° ELBOW, SCH STD, CS, BE, ASTM A234 GR. WPB, ASME B16.9	3
4	TEE, SCH STD, CS, BE, ASTM A234 GR. WPB, ASME B16.9	3
5	REDUCING TEE, SCH STD, CS, BE, ASTM A234 GR. WPB, ASME B16.9	6x3
6	FLANGE WN, 150# RF, CS, ASTM A105, ASME B16.5	3
7	VALVE, BALL, 150# RF, CARBON STEEL	3
8	PS-1, SEE DET ON SHT M5.00	
9	PS-2, SEE DET ON SHT M5.00	
10	PS-3, SEE DET ON SHT M5.00	
11	PS-4, SEE DET ON SHT M5.00	
12	PS-5A, SEE DET ON SHT M5.00	
13	PS-5B, SEE DET ON SHT M5.00	
14	PS-5C, SEE DET ON SHT M5.00	

NOTE:

1. PIPING SHALL MEET PIPE SPECIFICATIONS NOTED HC01 AND YHD.

FUEL STORAGE CONTAINMENT PIPING PLAN

SCALE: 1" = 8'

0 8' 16'

SCALE: 1" = 8'

BID PACKAGE - NOT FOR CONSTRUCTION

REV.	DATE	DESCRIPTION	BY
0	03/11/2026	ISSUED FOR BID	LEK

LADRA EYMAN KELLY
License No. 39645
PROFESSIONAL ENGINEER
IN
MECHANICAL ENGINEERING
3/11/2026

SEWERAGE AND WATER BOARD OF NEW ORLEANS

CONTRACT No. 1444

WEST POWER COMPLEX @ CWPT
FUEL OIL DELIVERY SYSTEM

MECHANICAL
FUEL STORAGE CONTAINMENT PIPING PLAN

WSP USA INC.
ONE PENN PLAZA, 7TH FLOOR,
NEW YORK, NY 10119
CERTIFICATE OF REGISTRATION # EF.0000023

Infinity Engineering Consultants, LLC
FIRM No LA – EF. 0003709
AEC Project No. 22-017
Civil | Structural | Mechanical | Electrical | Marine | Transportation
Metairie, LA www.infinityec.com 504-304-0548

DR.	R. SCHOUEST
CK:	L. KELLY
AP:	L. KELLY
LAST EDIT:	
SCALE:	AS NOTED
DATE:	03/11/2026

A/E DWG NO. M2.15

DWG. No. 12196-W-24

SET NO: SHEET NO: 24 OF 72

DATE	03/11/2026	JOB NO.	22-017

DESIGNED BY: L. KELLY

FILE NAME: M2.15 FUEL STORAGE CONTAINMENT PIPING PLAN.dwg

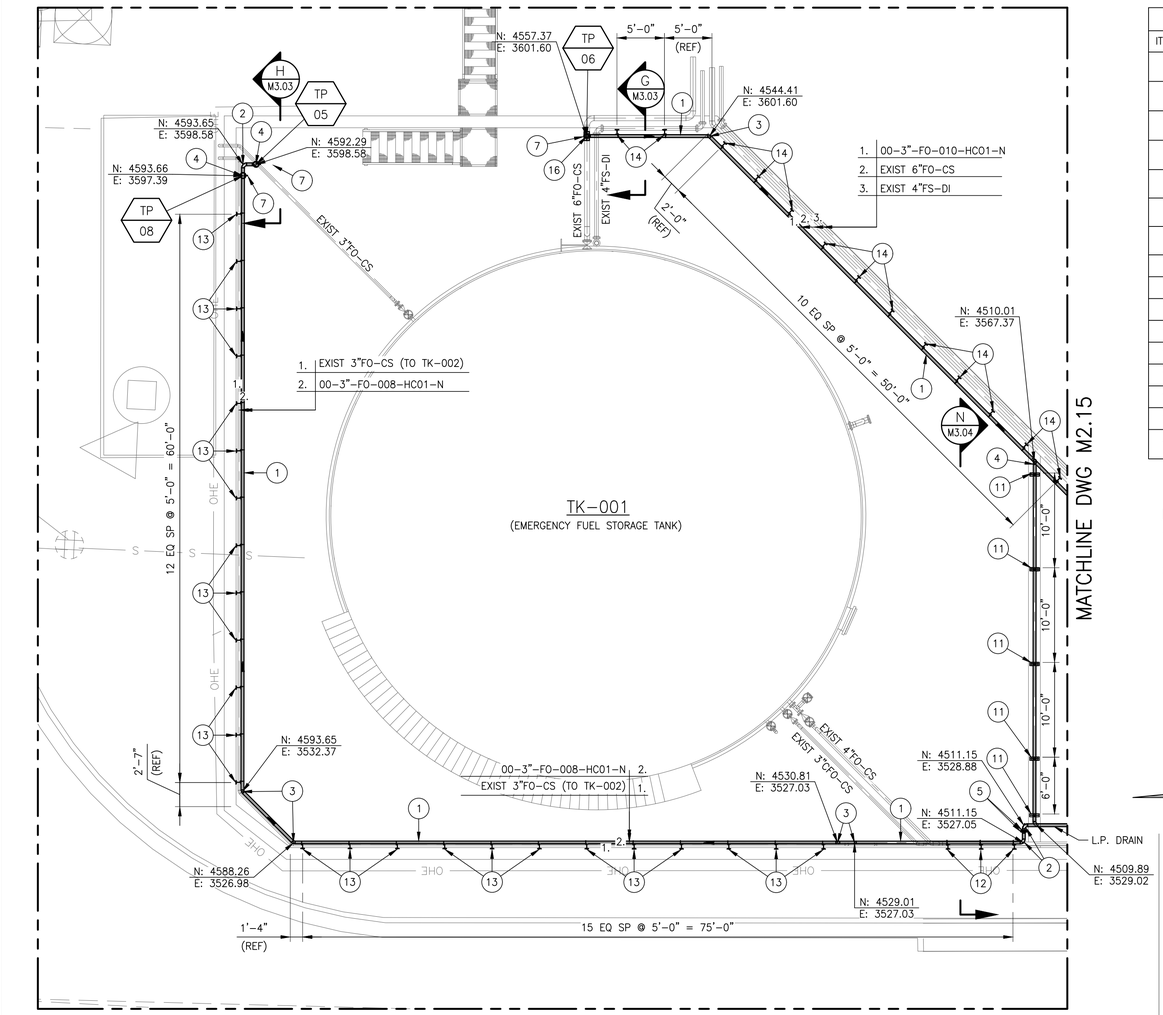

FUEL STORAGE CONTAINMENT PIPING PLAN

SCALE: 1" = 8'

0 8' 16'

SCALE: 1" = 8'

LEGEND		
ITEM#	DESCRIPTION	NPD(IN)
1	PIPE, SCH STD, CS, BE, ASTM A53 Gr. B, ASME B36.10M	3
2	90° ELBOW, SCH STD, CS, BE, ASTM A234 GR. WPB, ASME B16.9	3
3	45° ELBOW, SCH STD, CS, BE, ASTM A234 GR. WPB, ASME B16.9	3
4	TEE, SCH STD, CS, BE, ASTM A234 GR. WPB, ASME B16.9	3
5	FLANGE WN, 150# RF, CS, ASTM A105, ASME B16.5	3
6	VALVE, CHECK, 150# RF, CARBON STEEL	3
7	VALVE, BALL, 150# RF, CARBON STEEL	3
8	PS-1, SEE DET ON SHT M5.00	
9	PS-2, SEE DET ON SHT M5.00	
10	PS-3A, SEE DET ON SHT M5.00	
11	PS-4, SEE DET ON SHT M5.00	
12	PS-5A, SEE DET ON SHT M5.00	
13	PS-5B, SEE DET ON SHT M5.00	
14	PS-5C, SEE DET ON SHT M5.00	
15	PS-3B, SEE DET ON SHT M5.00	
16	REDUCING TEE, SCH STD, CS, BE, ASTM A234 GR. WPB, ASME B16.9	6x3

NOTE:

1. CONTRACTOR SHALL COORDINATE SKID SUPPLY AND DISCHARGE FLANGES WITH FO PIPE CONNECTIONS.
2. PIPING SHALL MEET PIPE SPECIFICATIONS NOTED HC01 AND YHD.
3. FOR NEW PLATFORM EXTENSION SEE SHEET S03-07-01.

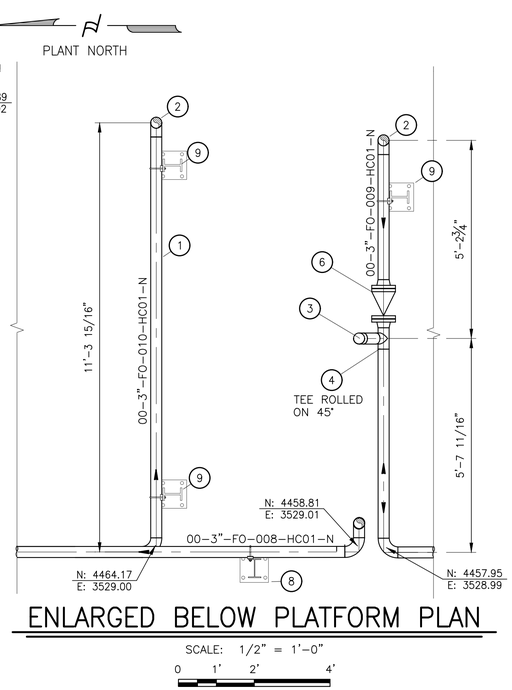

ENLARGED BELOW PLATFORM PLAN

SCALE: 1/2" = 1'-0"

0 1' 2' 4'

SCALE: 1/2" = 1'-0"

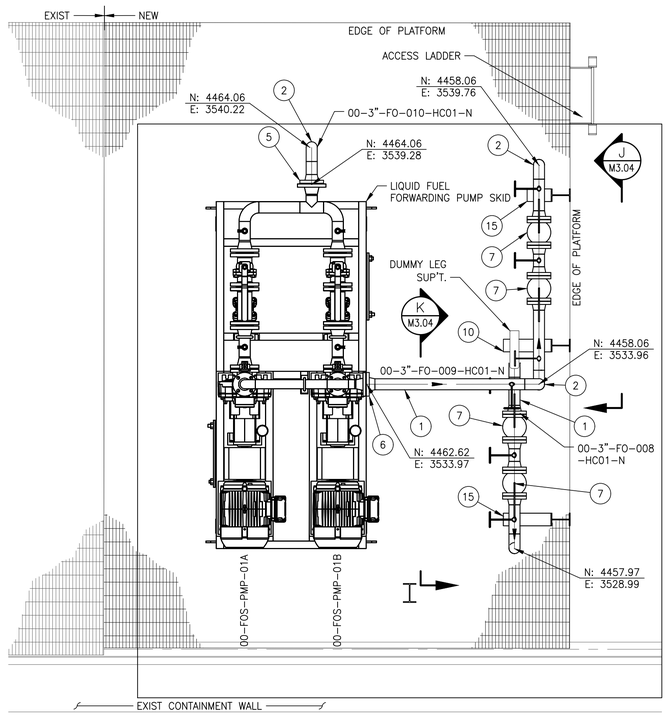

ENLARGED ABOVE PLATFORM PLAN

SCALE: 1/2" = 1'-0"

0 1' 2' 4'

SCALE: 1/2" = 1'-0"

REV.	DATE	DESCRIPTION	BY
0	01/22/2026	ISSUED FOR BID	LEK

SEWERAGE AND WATER BOARD OF NEW ORLEANS

CONTRACT No. 1444

WEST POWER COMPLEX @ CWPT
FUEL OIL DELIVERY SYSTEM

MECHANICAL
FUEL STORAGE CONTAINMENT PIPING PLAN

STATE OF LOUISIANA
LAURA EYMAN KELLY
License No. 59645
PROFESSIONAL ENGINEER
IN
MECHANICAL ENGINEERING
3/11/2026

WSP USA Inc.
ONE PENN PLAZA, 11TH FLOOR,
NEW YORK, NY 10119
CERTIFICATE OF REGISTRATION # EF.0000023

FIRM No: LA – EF. 0003109
Infinity Engineering Consultants, LLC
Civil | Structural | Mechanical | Electrical | Marine | Transportation
Metairie, LA www.infinityec.com 504-304-0148

DR.	R. SCHOUEST	A/E DWG NO.
CK:	L. KELLY	M2.16
AP:	L. KELLY	
LAST EDIT:		DWG. No. 12196-W-24
SCALE:	AS NOTED	
DATE:	03/11/2026	SET NO: SHEET NO: 25 OF 72

DATE	03/11/2026	JOB NO.	22-017

DESIGNED BY: L. KELLY

FILE NAME: M2.15 FUEL STORAGE CONTAINMENT PIPING PLAN.dwg

BID PACKAGE - NOT FOR CONSTRUCTION

NOTES:

1. CONTRACTOR SHALL EXCAVATE CAREFULLY IN THE AREA OF KNOWN CONDUITS AND DUCT BANK TO AVOID DAMAGE. IF CONDUITS OR DUCT BANK ARE DAMAGED DURING CONSTRUCTION, CONTRACTOR SHALL REPAIR.
2. CONDUITS ARE ABANDONED IN PLACE. IF ENCOUNTERED AND IN CONFLICT WITH CONSTRUCTION, THEY CAN BE REMOVED.

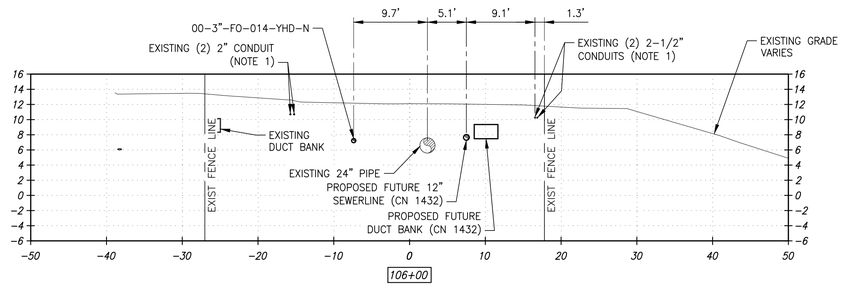

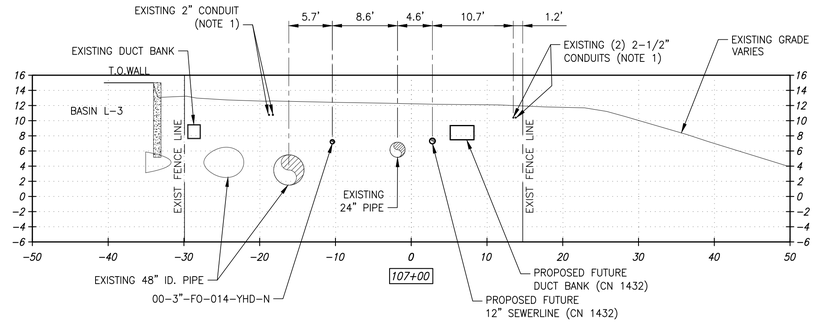

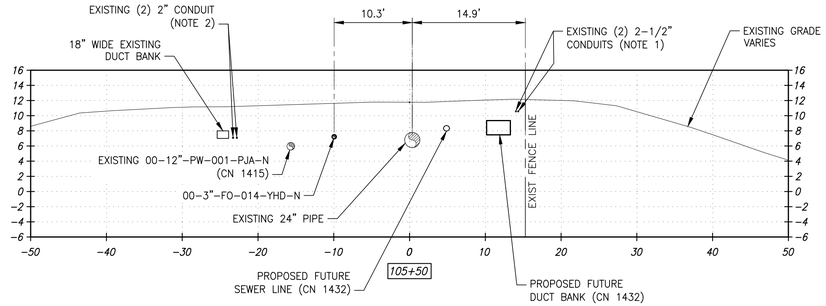

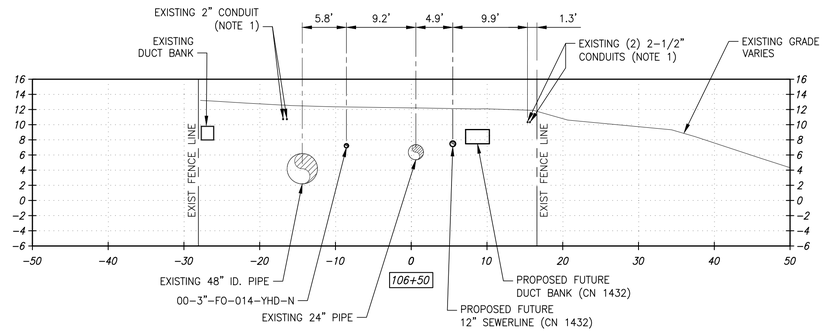

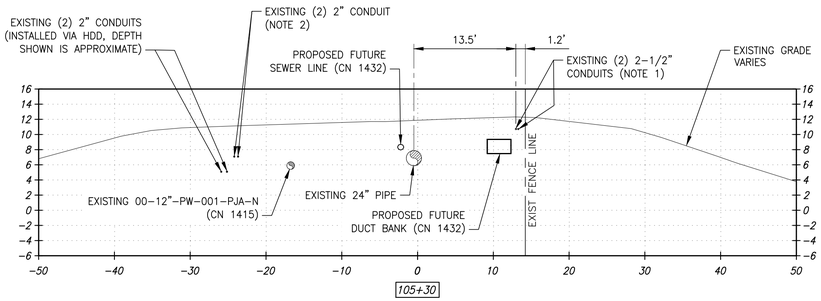

0 10' 20'
SCALE: 1" = 10'

REV.	DATE	DESCRIPTION	BY
0	03/11/2026	ISSUED FOR BID	LEK

STATE OF LOUISIANA
LAURA LYMAN KELLY
License No. 39645
PROFESSIONAL ENGINEER
IN
MECHANICAL ENGINEERING
3/11/2026

WSP USA Inc.
ONE PENN PLAZA, 47TH FLOOR,
NEW YORK, NEW YORK 10119
CERTIFICATE OF REGISTRATION # EF.0000623

FIRM No: LA – EF. 0003709
Infinity Engineering Consultants, LLC
Civil | Structural | Mechanical | Electrical | Marine | Transportation
Metairie, LA www.infinityec.com 504-304-0548

DATE	03/11/2026	JOB NO.	22-017

DESIGNED BY: L KELLY
FILE NAME: CROSS SECTIONS.dwg

SEWERAGE AND WATER BOARD OF NEW ORLEANS

CONTRACT No. 1444
WEST POWER COMPLEX @ CWPT
FUEL OIL DELIVERY SYSTEM

MECHANICAL

CROSS SECTIONS

DR:	Q. VU
CK:	L. KELLY
AP:	L. KELLY
LAST EDIT:	
SCALE:	AS NOTED
DATE:	03/11/2026

A/E DWG NO.
M3.00

DWG. No. 12196-W-24

SET NO: SHEET NO: 26 OF 72

BID PACKAGE - NOT FOR CONSTRUCTION

NOTES:

1. CONTRACTOR SHALL EXCAVATE CAREFULLY IN THE AREA OF KNOWN CONDUITS AND DUCT BANK TO AVOID DAMAGE. IF CONDUITS OR DUCT BANK ARE DAMAGED DURING CONSTRUCTION, CONTRACTOR SHALL REPAIR.

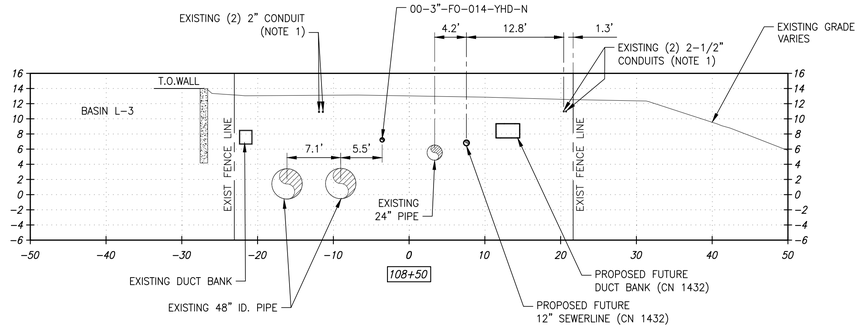

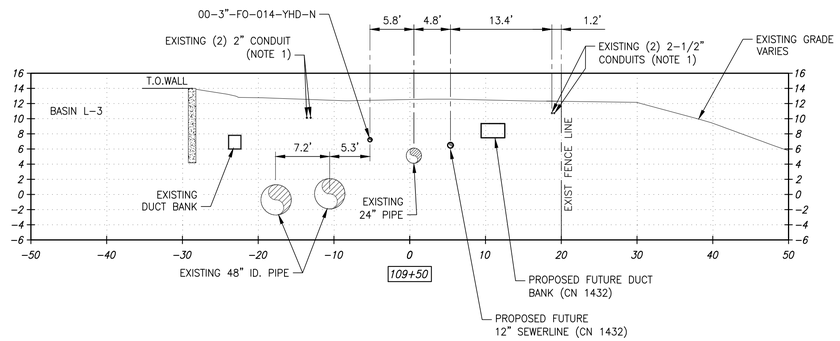

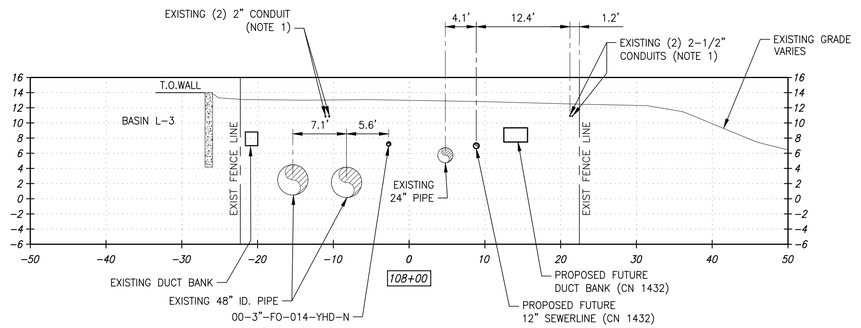

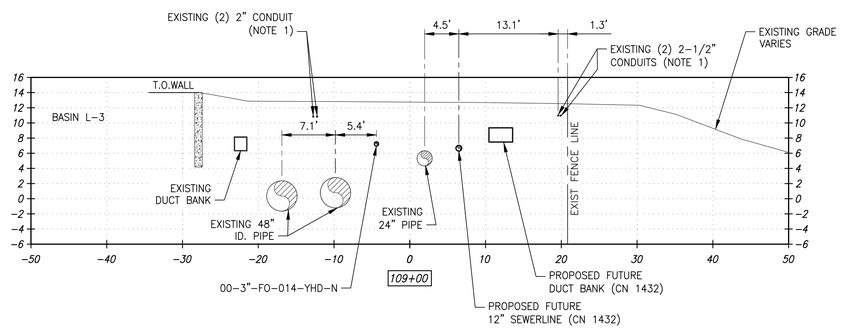

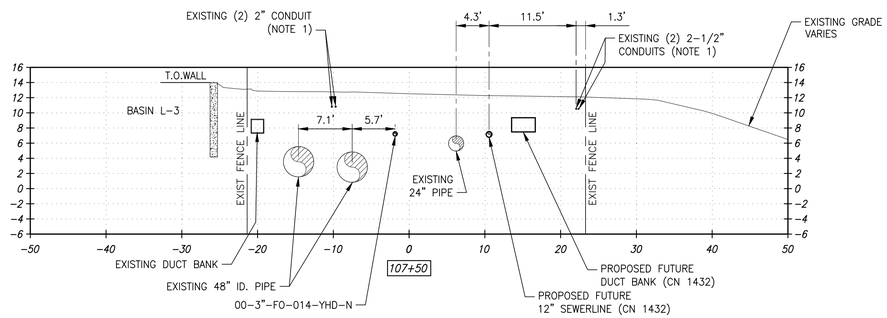

0 10' 20'
SCALE: 1" = 10'

REV.	DATE	DESCRIPTION	BY
0	03/11/2026	ISSUED FOR BID	LEK

STATE OF LOUISIANA
LAURA EYMAN KELLY
License No. 39645
PROFESSIONAL ENGINEER
IN
MECHANICAL ENGINEERING
3/11/2026

WSP USA Inc.
ONE PENN PLAZA, 4TH FLOOR,
NEW YORK, NY 10119
CERTIFICATE OF REGISTRATION # EF.2000023

FIRM No: LA – EF. 0003709
Infinity Engineering Consultants, LLC
Civil | Structural | Mechanical | Electrical | Marine | Transportation
Metairie, LA www.infinityec.com 504-304-0548

DATE	03/11/2026	JOB NO.	22-017

DESIGNED BY: L KELLY
FILE NAME: CROSS SECTIONS.dwg

SEWERAGE AND WATER BOARD OF NEW ORLEANS

CONTRACT No. 1444
WEST POWER COMPLEX @ CWPT
FUEL OIL DELIVERY SYSTEM

MECHANICAL

CROSS SECTIONS

DR:	Q. VU
CK:	L. KELLY
AP:	L. KELLY
LAST EDIT:	
SCALE:	AS NOTED
DATE:	03/11/2026

A/E DWG NO.
M3.01

DWG. No. 12196-W-24

SET NO: SHEET NO: 27 OF 72

BID PACKAGE - NOT FOR CONSTRUCTION

NOTES:

1. CONTRACTOR SHALL EXCAVATE CAREFULLY IN THE AREA OF KNOWN CONDUITS AND DUCT BANK TO AVOID DAMAGE. IF CONDUITS OR DUCT BANK ARE DAMAGED DURING CONSTRUCTION, CONTRACTOR SHALL REPAIR.

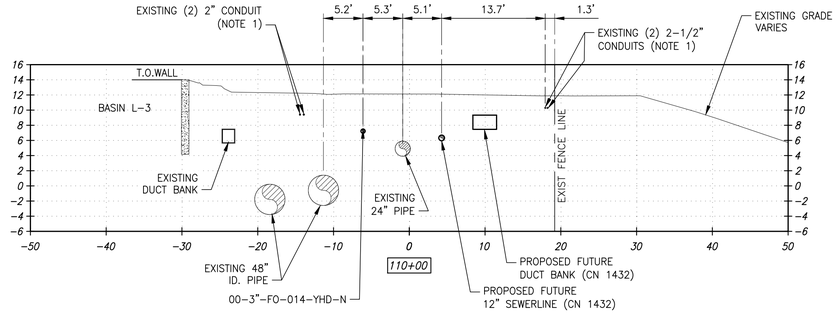

0 10' 20'
SCALE: 1" = 10'

REV.	DATE	DESCRIPTION	BY
0	03/11/2026	ISSUED FOR BID	LEK

STATE OF LOUISIANA
LAURA EYMAN KELLY
License No. 39645
PROFESSIONAL ENGINEER
IN
MECHANICAL ENGINEERING
3/11/2026

WSP USA Inc.
ONE PENN PLAZA, 4TH FLOOR,
NEW YORK, NY 10119
CERTIFICATE OF REGISTRATION # EF.2000023

FIRM No: LA – EF. 0003709
Infinity Engineering Consultants, LLC
Civil | Structural | Mechanical | Electrical | Marine | Transportation
Metairie, LA www.infinityec.com 504-304-0548

DATE	03/11/2026	JOB NO.	22-017

DESIGNED BY: L KELLY
FILE NAME: CROSS SECTIONS.dwg

SEWERAGE AND WATER BOARD OF NEW ORLEANS

CONTRACT No. 1444
WEST POWER COMPLEX @ CWPT
FUEL OIL DELIVERY SYSTEM

MECHANICAL

CROSS SECTIONS

DR:	Q. VU
CK:	L. WEST
AP:	L. KELLY
LAST EDIT:	
SCALE:	AS NOTED
DATE:	03/11/2026

A/E DWG NO.
M3.02

DWG. No. 12196-W-24

SET NO: SHEET NO: 28 OF 72

BID PACKAGE - NOT FOR CONSTRUCTION

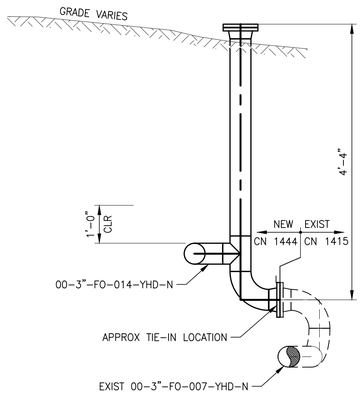

SECTION A M2.01
SCALE: 1/2" = 1'-0"

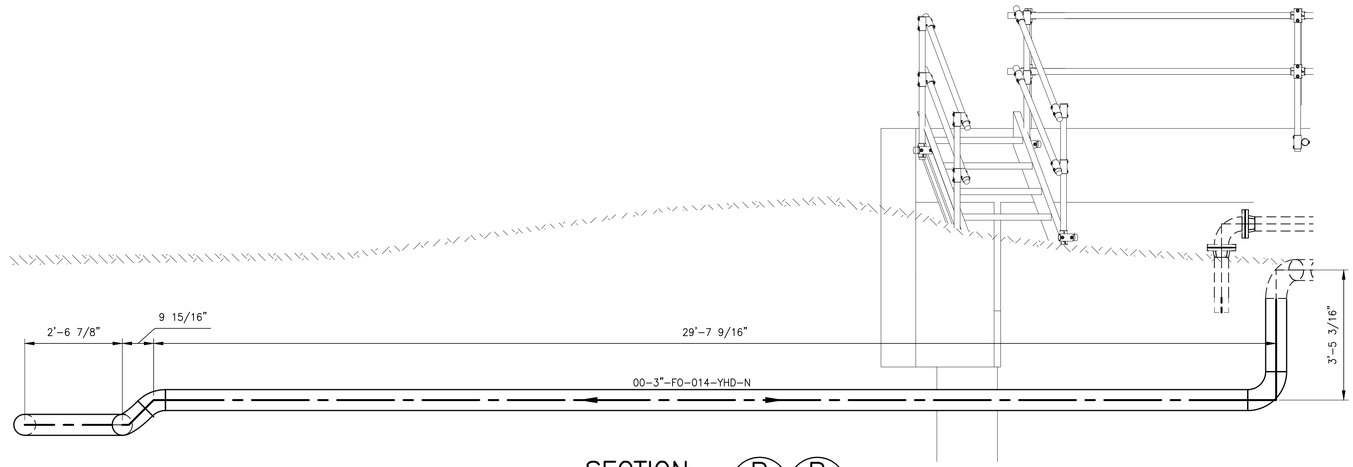

SECTION B B M2.06 M2.07
SCALE: 1/2" = 1'-0"

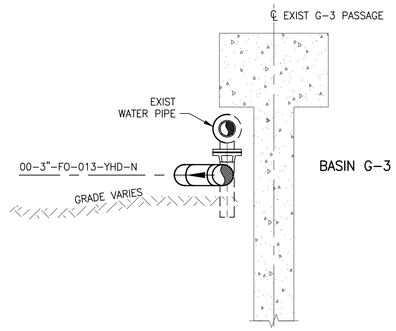

SECTION C C M2.06 M2.07
SCALE: 1/2" = 1'-0"

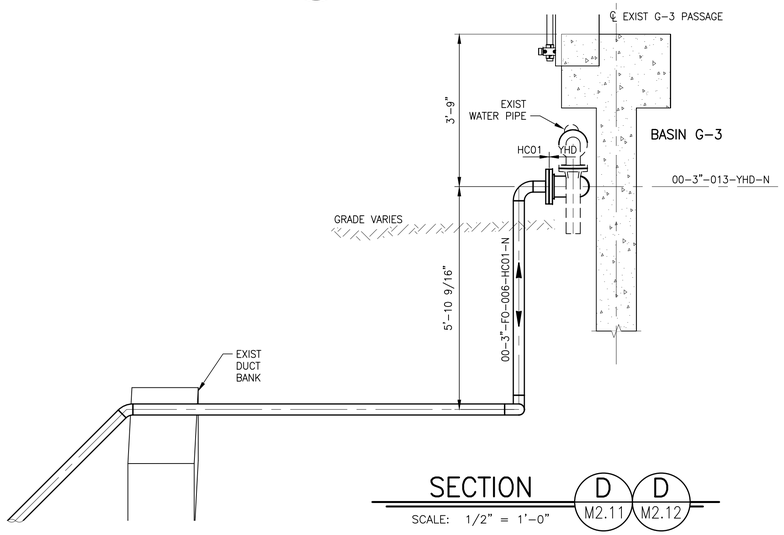

SECTION D D M2.11 M2.12
SCALE: 1/2" = 1'-0"

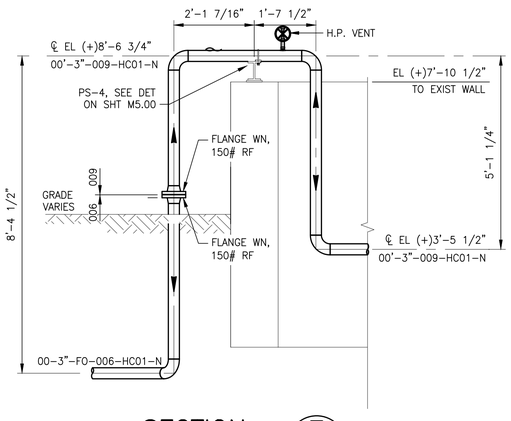

SECTION E M2.15
SCALE: 1/2" = 1'-0"

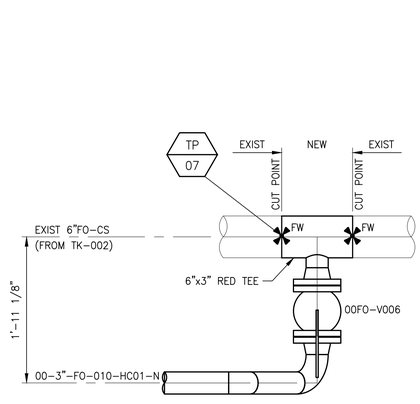

SECTION F M2.15
SCALE: 1" = 1'-0"

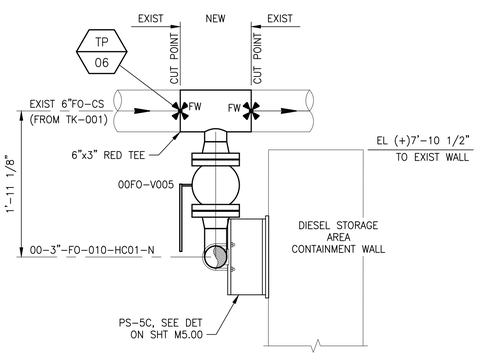

SECTION G M2.16
SCALE: 1" = 1'-0"

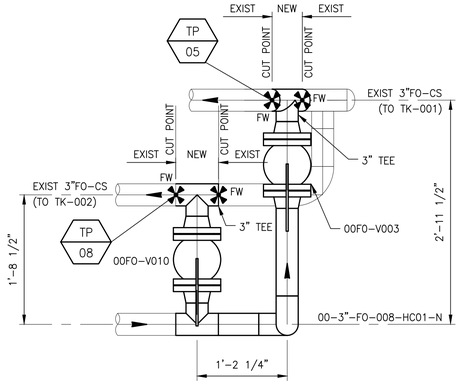

SECTION H M2.16
SCALE: 1" = 1'-0"

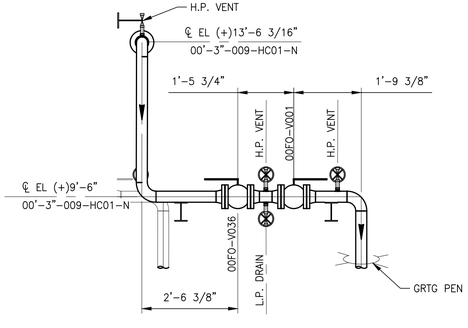

SECTION J M2.16
SCALE: 1/2" = 1'-0"

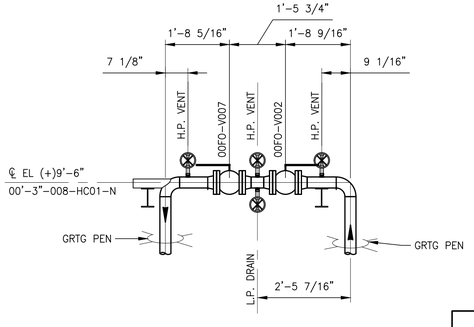

SECTION K M2.16
SCALE: 1/2" = 1'-0"

REV.	DATE	DESCRIPTION	BY
0	03/11/2026	ISSUED FOR BID	LEK

WSP USA INC.
ONE PENN PLAZA, 55TH FLOOR,
NEW YORK, NY 10119
CERTIFICATE OF REGISTRATION # EF.0000623

Infinity Engineering Consultants, LLC
FIRM No: LA – EF. 0003709
Civil | Structural | Mechanical | Electrical | Marine | Transportation
Metairie, LA www.infinityec.com 504-304-0548

DATE 03/11/2026 JOB NO. 22-017
DESIGNED BY: L. KELLY
FILE NAME: PIPING SECTIONS Sheet 1.dwg

STATE OF LOUISIANA
LAURA LYMAN KELLY
License No. 39645
PROFESSIONAL ENGINEER
IN
MECHANICAL ENGINEERING
3/11/2026

SEWERAGE AND WATER BOARD OF NEW ORLEANS

CONTRACT No. 1444
WEST POWER COMPLEX @ CWPT
FUEL OIL DELIVERY SYSTEM

MECHANICAL

PIPING SECTIONS

DR:	T. O'QUINN
CK:	L. KELLY
AP:	L. KELLY
LAST EDIT:	
SCALE:	AS NOTED
DATE:	03/11/2026

A/E DWG NO. M3.03

DWG. No. 12196-W-24

SET NO: SHEET NO: 29 OF 72

BID PACKAGE - NOT FOR CONSTRUCTION

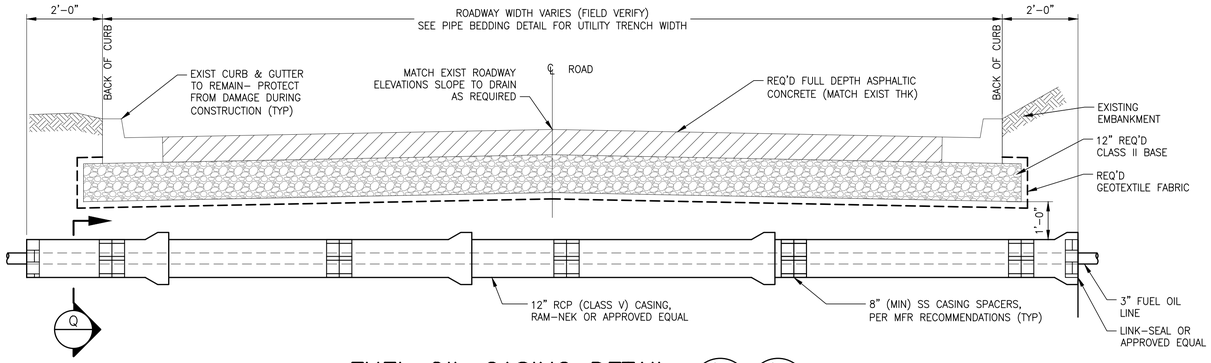

FUEL OIL CASING DETAIL (L / M2.12, M2.13)

SCALE: 1/2" = 1'-0"

ROADWAY NOTES:

1. AFTER BACKFILLING OVER CARRIER PIPE, CONTRACTOR SHALL PLACE AND INSTALL TEMPORARY AGGREGATE SURFACING FOR A MINIMUM OF TWO (2) MONTHS. TEMPORARY AGGREGATE SHALL BE COMPACTED TO LEAST 3" ABOVE FINAL ROADWAY ELEVATION.
2. COMPLETELY REMOVE TEMPORARY AGGREGATE SURFACE TO REQUIRED SUBGRADE ELEVATION AS REQUIRED.

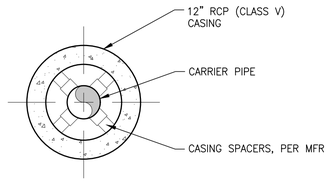

SECTION (Q / M3.04)

SCALE: 1-1/2" = 1'-0"

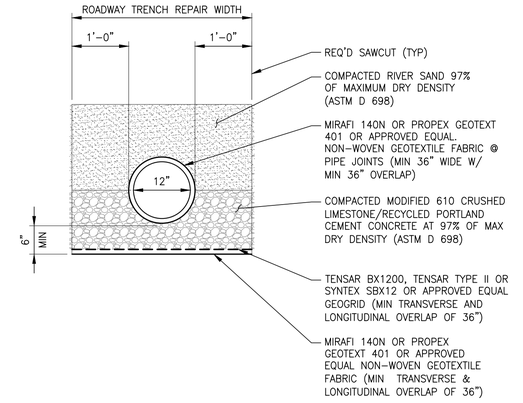

TYPICAL CARRIER PIPE BEDDING DETAIL

SCALE: 3/4" = 1'-0"

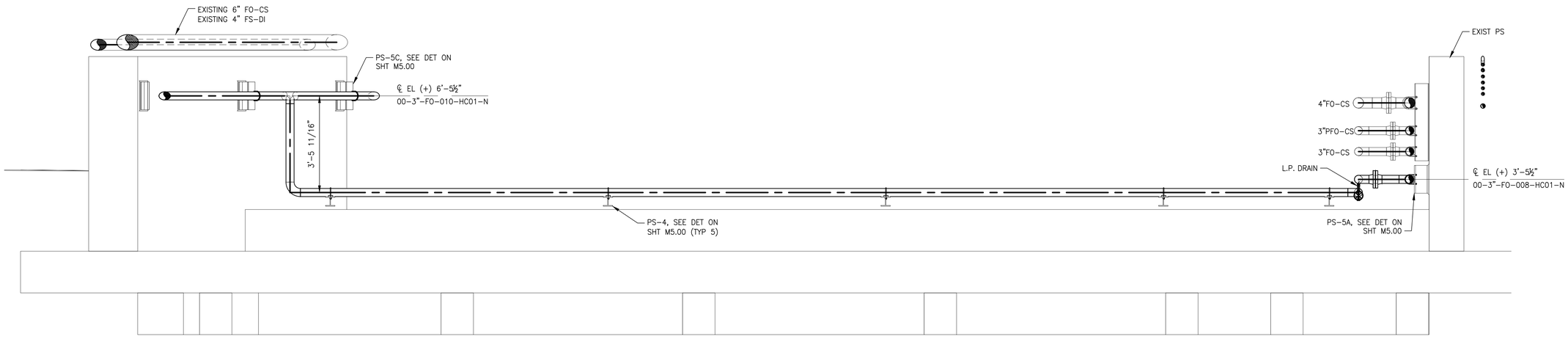

SECTION (N / M2.16)

SCALE: 1/2" = 1'-0"

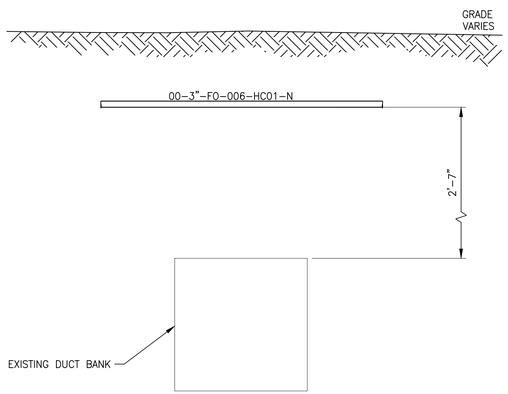

SECTION (M / M2.13)

SCALE: 1/4" = 1'-0"

THERMAL EXPANSION LOOP NOTES:

1. SPACERS SHALL NOT BE PROVIDED IN ELBOWS AND VERTICAL SECTIONS OF THERMAL EXPANSION LOOP.

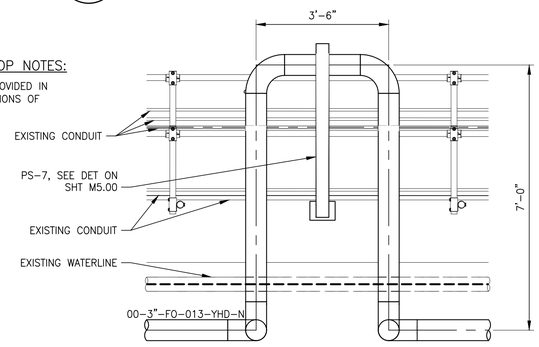

SECTION (P / M2.09)

SCALE: 1/2" = 1'-0"

REV.	DATE	DESCRIPTION	BY
0	03/11/2026	ISSUED FOR BID	LEK

STATE OF LOUISIANA — LAURA EYMAN KELLY — License No. 39645 — PROFESSIONAL ENGINEER IN MECHANICAL ENGINEERING — 3/11/2026

WSP USA INC. ONE PENN PLAZA, 4TH FLOOR, NEW YORK, NY 10119 — CERTIFICATE OF AUTHORIZATION # EF.0000623

Infinity Engineering Consultants, LLC — FIRM No: LA – EF. 0003709 — Civil | Structural | Mechanical | Electrical | Marine | Transportation — Metairie, LA — www.infinityec.com — 504-304-0548

DATE 03/11/2026 — JOB NO. 22-017

DESIGNED BY: L. KELLY

FILE NAME: M2.18 PIPING SECTIONS.dwg

SEWERAGE AND WATER BOARD OF NEW ORLEANS

CONTRACT No. 1444

WEST POWER COMPLEX @ CWPT
FUEL OIL DELIVERY SYSTEM

MECHANICAL

PIPING SECTIONS

DR:	R. SCHOUEST
CK:	L. WEST
AP:	L. KELLY
LAST EDIT:	
SCALE:	AS NOTED
DATE:	03/11/2026

A/E DWG NO. M3.04

DWG. No. 12196-W-24

SET NO: SHEET NO: 30 OF 72

BID PACKAGE - NOT FOR CONSTRUCTION



LOOKING NORTH

TP-05 LOCATION SECTION

SCALE: N.T.S.

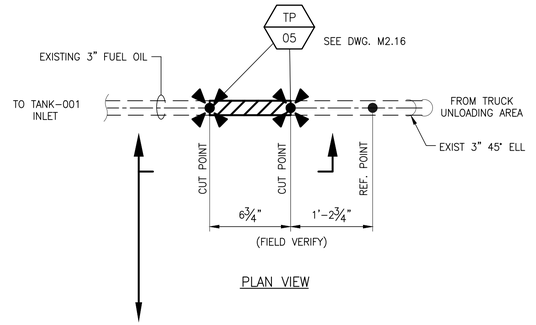

PLAN VIEW

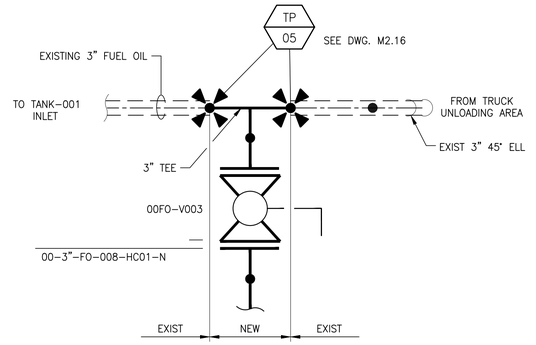

NEW INSTALL

LEGEND:

DEMO HATCH AREA

REV.	DATE	DESCRIPTION	BY
0	03/11/2026	ISSUED FOR BID	LEK

SEWERAGE AND WATER BOARD OF NEW ORLEANS

CONTRACT No. 1444

WEST POWER COMPLEX @ CWPT
FUEL OIL DELIVERY SYSTEM

MECHANICAL

TP-05 LOCATION PLAN & DETAILS

STATE OF LOUISIANA
LESLIE LYNN KELLY
License No. 39645
PROFESSIONAL ENGINEER
IN
MECHANICAL ENGINEERING
3/11/2026

WSP USA INC.
ONE PENN PLAZA, 5TH FLOOR,
NEW YORK, NY 10119
CERTIFICATE OF REGISTRATION # EF.2000623

FIRM No LA – EF. 0003109
Infinity Engineering Consultants, LLC
IEC Project No. 22-017
Civil | Structural | Mechanical | Electrical | Marine | Transportation
Metairie, LA www.infinityec.com 504-304-6548

DATE	03/11/2026	JOB NO.	22-017
DESIGNED BY: L. KELLY			
FILE NAME: M4.00 TP-05 LOCATION PLAN & DETAILS.dwg			

DR.	R. SCHOUEST
CK:	L. KELLY
AP:	L. KELLY
LAST EDIT:	
SCALE:	AS NOTED
DATE:	03/11/2026

A/E DWG NO.
M4.00

DWG. No. 12196-W-24

SET NO: SHEET NO: 31 OF 72

BID PACKAGE - NOT FOR CONSTRUCTION



LOOKING SOUTH

TP–06 LOCATION SECTION

SCALE: N.T.S.

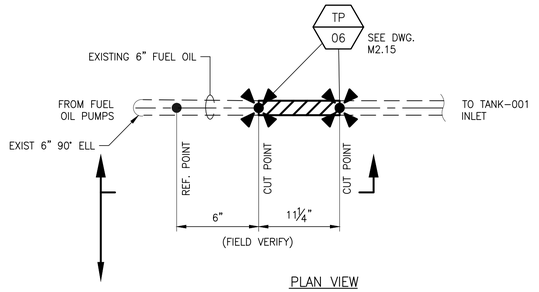

PLAN VIEW

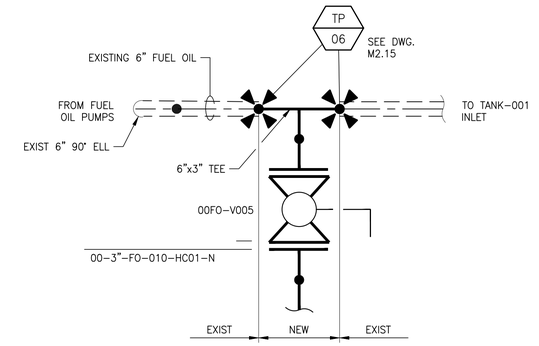

NEW INSTALL

LEGEND:

DEMO HATCH AREA

REV.	DATE	DESCRIPTION	BY
0	03/11/2026	ISSUED FOR BID	LEK

SEWERAGE AND WATER BOARD OF NEW ORLEANS

CONTRACT No. 1444

WEST POWER COMPLEX @ CWPT
FUEL OIL DELIVERY SYSTEM

MECHANICAL

TP-06 LOCATION PLAN & DETAILS

STATE OF LOUISIANA
LESLIE LYNN KELLY
License No. 39645
PROFESSIONAL ENGINEER
IN
MECHANICAL ENGINEERING
3/11/2026

WSP USA INC.
ONE PENN PLAZA, 5TH FLOOR,
NEW YORK, NY 10119
CERTIFICATE OF REGISTRATION # EF.0000623

FIRM No LA – EF. 0003109
Infinity Engineering Consultants, LLC
IEC Project No. 25-011
Civil | Structural | Mechanical | Electrical | Marine | Transportation
Metairie, LA www.infinityeci.com 504-304-6548

DR.	R. SCHOUEST	A/E DWG NO.	M4.01
CK:	L. KELLY		
AP:	L. KELLY		
LAST EDIT:		DWG. No. 12196-W-24	
SCALE:	AS NOTED		
DATE:	03/11/2026	SET NO:	SHEET NO: 32 OF 72

DATE	03/11/2026	JOB NO.	22-017

DESIGNED BY: L. KELLY

FILE NAME: M3.01 TP-06 LOCATION PLAN & DETAILS.dwg

BID PACKAGE - NOT FOR CONSTRUCTION



LOOKING SOUTH

TP-07 LOCATION SECTION

SCALE: N.T.S.

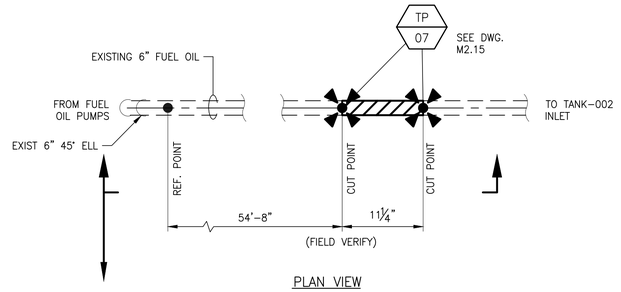

PLAN VIEW

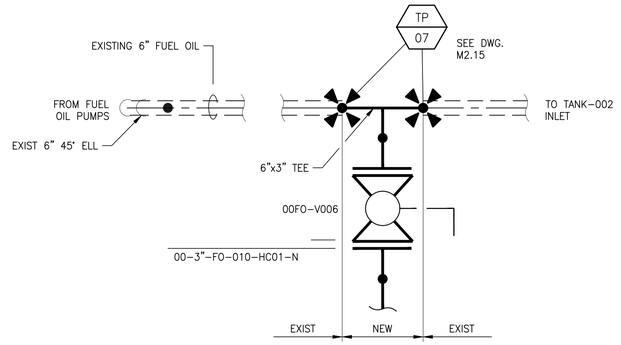

NEW INSTALL

LEGEND:

DEMO HATCH AREA

REV.	DATE	DESCRIPTION	BY
0	03/11/2026	ISSUED FOR BID	LEK

SEWERAGE AND WATER BOARD
OF NEW ORLEANS

CONTRACT No. 1444

WEST POWER COMPLEX @ CWPT
FUEL OIL DELIVERY SYSTEM

MECHANICAL

TP-07 LOCATION PLAN & DETAILS

STATE OF LOUISIANA
LESLIE LYNN KELLY
License No. 39645
PROFESSIONAL ENGINEER
IN
MECHANICAL ENGINEERING
3/11/2026

WSP USA INC.
ONE PENN PLAZA, 5TH FLOOR,
NEW YORK, NY 10119
CERTIFICATE OF REGISTRATION # EF.0000623

FIRM No LA – EF. 0003109
Infinity Engineering Consultants, LLC
IEC Project No. 22-017
Civil | Structural | Mechanical | Electrical | Marine | Transportation
Metairie, LA www.infinityec.com 504-304-6548

DR.	R. SCHOUEST
CK:	L. KELLY
AP:	L. KELLY
LAST EDIT:	
SCALE:	AS NOTED
DATE:	03/11/2026

A/E DWG NO.
M4.02

DWG. No. 12196-W-24

SET NO: SHEET NO: 33 OF 72

DATE	03/11/2026	JOB NO.	22-017

DESIGNED BY: L. KELLY

FILE NAME: M3.02 TP-07 LOCATION PLAN & DETAILS.dwg

BID PACKAGE - NOT FOR CONSTRUCTION



LOOKING NORTH

TP-08 LOCATION SECTION

SCALE: N.T.S.

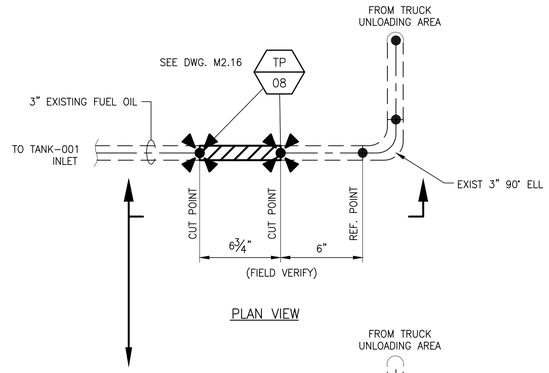

PLAN VIEW

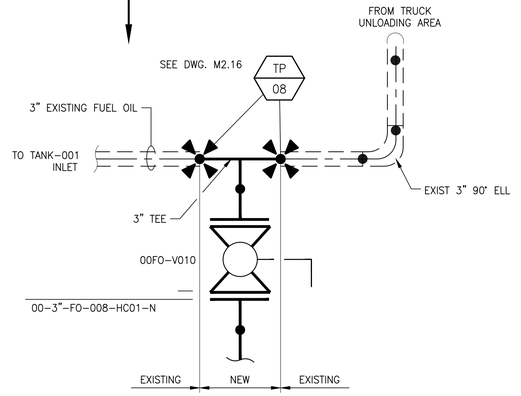

NEW INSTALL

LEGEND:

DEMO HATCH AREA

REV.	DATE	DESCRIPTION	BY
0	03/11/2026	ISSUED FOR BID	LEK

SEWERAGE AND WATER BOARD OF NEW ORLEANS

CONTRACT No. 1444

WEST POWER COMPLEX @ CWPT
FUEL OIL DELIVERY SYSTEM

MECHANICAL

TP-08 LOCATION PLAN & DETAILS

STATE OF LOUISIANA
LESLIE LYNNE KELLY
License No. 39645
PROFESSIONAL ENGINEER
IN
MECHANICAL ENGINEERING
3/11/2026

WSP USA Inc.
ONE PENN PLAZA, 5TH FLOOR,
NEW YORK, NY 10119
CERTIFICATE OF REGISTRATION # EF.0000623

FIRM No LA – EF. 0003109
Infinity Engineering Consultants, LLC
Civil | Structural | Mechanical | Electrical | Marine | Transportation
Metairie, LA www.infinityec.com 504-304-6548

DR.	R. SCHOUEST
CK:	L. KELLY
AP:	L. KELLY
LAST EDIT:	
SCALE:	AS NOTED
DATE:	03/11/2026

A/E DWG NO. M4.03

DWG. No. 12196-W-24

SHEET NO: 34 OF 72

DATE	03/11/2026	JOB NO.	22-017

DESIGNED BY: L. KELLY

FILE NAME: M3.03 TP-08 LOCATION PLAN & DETAILS.dwg

BID PACKAGE - NOT FOR CONSTRUCTION

NOTES:

1. ALL U-BOLTS TO BE FASTENED AT BEAM GUAGE LINE.
2. NUMBER AND LOCATION OF U-BOLTS ON PIPE SUPPORTS MAY VARY. FIELD VERIFY LOCATIONS AND ELEVATIONS BEFORE INSTALLATION.
3. ALL PIPE SUPPORTS WELDS SHALL BE FULL PENETRATION WELDS.
4. ALL PIPE SUPPORTS SHALL BE HOT DIP GALVANIZED AFTER FABRICATION, INCLUDING AFTER DRILLING BOLTS HOLES.

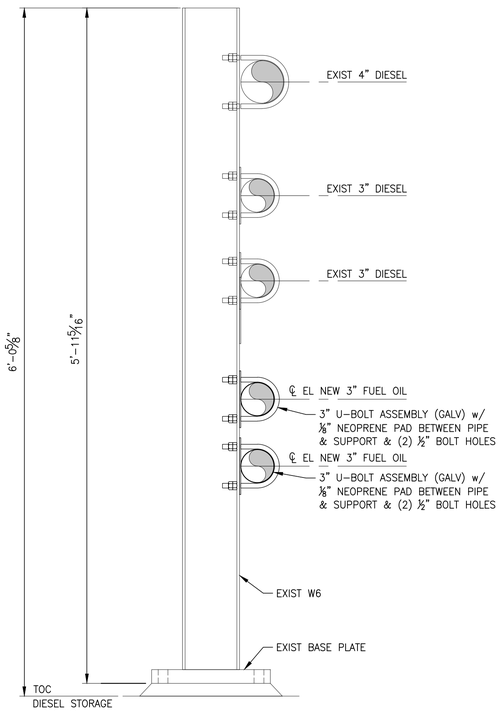

(6) LOCATIONS

PS-1

SCALE: 1-1/2" = 1'-0"

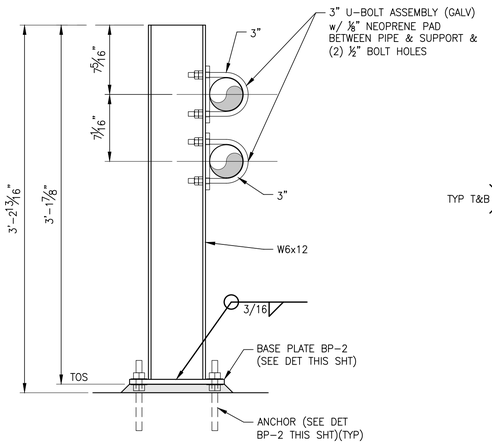

(7) LOCATIONS

PS-2

SCALE: 1-1/2" = 1'-0"

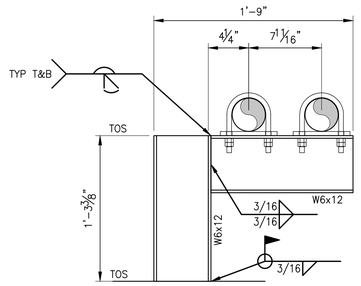

(1) LOCATIONS

PS-3A

SCALE: 1-1/2" = 1'-0"

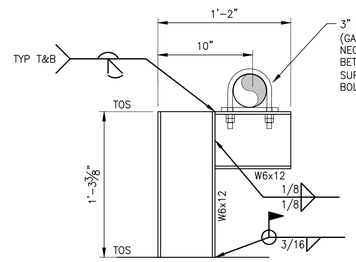

(2) LOCATIONS

PS-3B

SCALE: 1-1/2" = 1'-0"

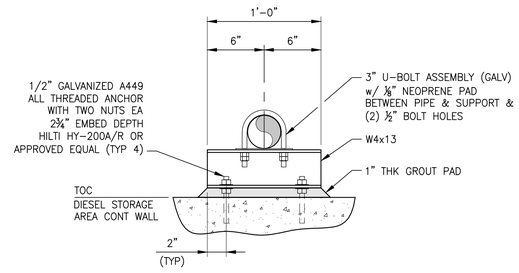

(5) LOCATIONS

PS-4

SCALE: 1-1/2" = 1'-0"

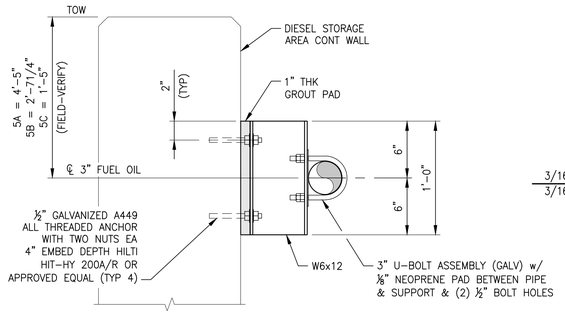

5A - (3) LOCATIONS
5B - (25) LOCATIONS
5C - (26) LOCATIONS

PS-5A/5B/5C

SCALE: 1-1/2" = 1'-0"

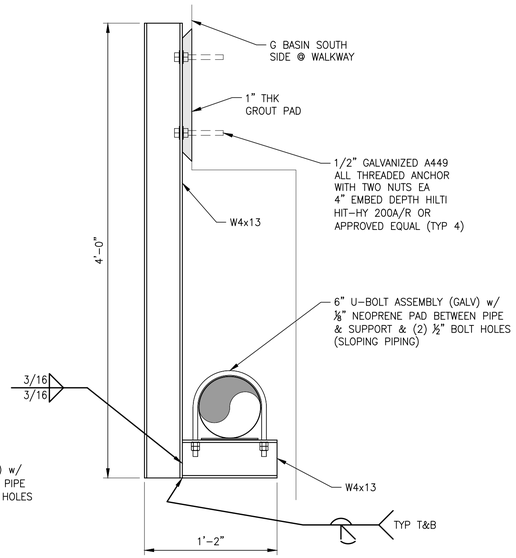

(28) LOCATIONS

PS-6

SCALE: 1-1/2" = 1'-0"

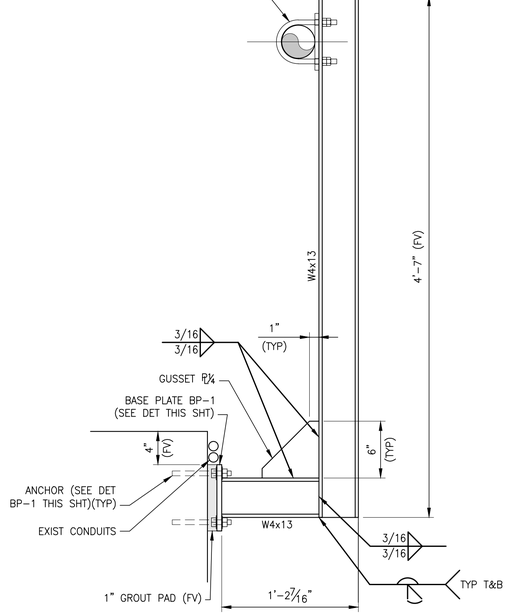

(1) LOCATION

PS-7

SCALE: 1-1/2" = 1'-0"

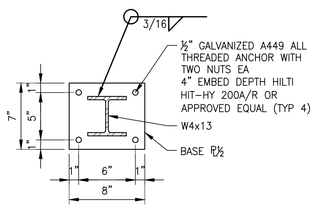

(1) REQ'D

BP-1

SCALE: 1-1/2" = 1'-0"

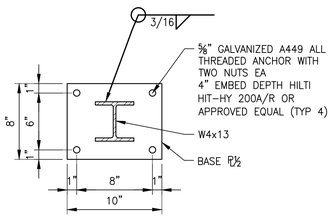

(7) REQ'D

BP-2

SCALE: 1-1/2" = 1'-0"

REV.	DATE	DESCRIPTION	BY
0	05/01/2026	ISSUED FOR BID	LEK

SEWERAGE AND WATER BOARD OF NEW ORLEANS

CONTRACT No. 1444

WEST POWER COMPLEX @ CWPT
FUEL OIL DELIVERY SYSTEM

MECHANICAL

PIPE SUPPORT DETAILS

LAURA EYMARD KELLY
STATE OF LOUISIANA
License No. 39645
PROFESSIONAL ENGINEER
IN
MECHANICAL ENGINEERING
5/1/2026

WSP USA INC.
ONE PENN PLAZA, 4TH FLOOR,
NEW YORK, NY 10119
CERTIFICATE OF RECOGNITION # EF.0000603

FIRM No: LA - EF. 0003109
Infinity Engineering Consultants, LLC
IDC Project No. 25-017
Civil | Structural | Mechanical | Electrical | Marine | Transportation
Metairie, LA | www.infinityec.com | 504-304-0548

DATE	05/01/2026	JOB NO.	22-017

DESIGNED BY: L. KELLY
FILE NAME: PIPE SUPPORT DETAILS.dwg

DR.	R. SCHOUEST
CK:	L. KELLY
AP:	L. KELLY
LAST EDIT:	
SCALE:	AS NOTED
DATE:	05/01/2026

A/E DWG NO.
M5.00

DWG. No. 12196-W-24

SET NO: SHEET NO: OF

BID PACKAGE - NOT FOR CONSTRUCTION

STRUCTURAL GENERAL NOTES

1. CONTRACTOR SHALL VERIFY ALL DIMENSIONS AND CONDITIONS WITH CONTRACT DRAWINGS AND WITH THE PHYSICAL CONDITIONS AT THE SITE, AND SHALL REPORT ALL DISCREPANCIES TO THE ENGINEER FOR RESOLUTION. THE CONTRACTOR SHALL NOT CONTINUE ANY WORK RELATING TO SUCH DISCREPANCIES WITHOUT ENGINEER APPROVAL. ALL FIELD REWORK OF IMPROPER FITUP SHALL BE AT THE CONTRACTORS EXPENSE.
2. CONTRACTOR SHALL MAKE EVERY REASONABLE EFFORT TO LOCATE ALL EXISTING UTILITIES AND EXERCISE CARE TO PROTECT THEM FROM DAMAGE DURING EXCAVATION AND CONSTRUCTION.
3. SITE VISITS BY THE ENGINEER WILL NOT INCLUDE INSPECTIONS. THE ENGINEER WILL NOT BE RESPONSIBLE FOR THE CONTRACTOR'S MEANS AND METHODS OF CONSTRUCTION, SEQUENCE OF CONSTRUCTION, OR SITE SAFETY PROGRAMS.
4. STRUCTURAL NOTES SHALL BE USED IN CONJUNCTION WITH THE SPECIFICATIONS. WHERE DIFFERENCES BETWEEN STRUCTURAL DRAWINGS, NOTES OR SPECIFICATIONS OCCUR, THE MOST STRINGENT REQUIREMENT SHALL GOVERN. IF DIFFERENCES OCCUR, THE CONTRACTOR SHALL REQUEST IMMEDIATE CLARIFICATION BEFORE PROCEEDING WITH THE WORK.
5. ALL DIMENSIONS ARE GIVEN IN FEET AND INCHES, UNLESS OTHERWISE NOTED.
6. WHERE REFERENCE IS MADE TO ASTM, AISC, ACI OR OTHER STANDARDS AND SPECIFICATIONS, THE LATEST ADOPTED EDITION IS INTENDED, UNLESS OTHERWISE NOTED.
7. STRUCTURES HAVE BEEN DESIGNED FOR OPERATIONAL LOADS ON THE COMPLETED STRUCTURE. CONTRACTOR SHALL TAKE ALL PRECAUTIONS NECESSARY TO PROTECT THE STRUCTURE DURING CONSTRUCTION, INCLUDING, BUT NOT LIMITED TO, BRACING, SHORING, AND LOAD BALANCING WHERE EXCESSIVE CONSTRUCTION LOADS MAY OCCUR.
8. CONTRACTOR SHALL PROVIDE ALL TEMPORARY SHORING AND BRACING REQUIRED FOR STABILITY UNTIL THE STRUCTURE IS COMPLETE.
9. OWNER OR OWNER'S AGENT, WILL EMPLOY AND PAY FOR THE SERVICES OF AN INDEPENDENT TESTING/INSPECTION COMPANY TO PERFORM SPECIAL INSPECTIONS AND TESTS IN ACCORDANCE WITH CHAPTER 17 OF THE INTERNATIONAL BUILDING CODE (IBC).
   A. SPECIAL INSPECTOR SHALL BE APPROVED BY THE OWNER, THE LOCAL BUILDING INSPECTION DEPARTMENT, AND BE ICC CERTIFIED FOR THE INSPECTIONS BEING PERFORMED.
   B. EMPLOYMENT OF THE INDEPENDENT TESTING/INSPECTION COMPANY AND INSPECTION SHALL IN NO WAY RELIEVE CONTRACTOR OF THEIR OBLIGATION TO PERFORM WORK IN ACCORDANCE WITH REQUIREMENTS OF CONTRACT DOCUMENTS.
   C. CONTRACTOR SHALL COORDINATE WITH THE INDEPENDENT TESTING/INSPECTION COMPANY TO FACILITATE THE EXECUTION OF ITS REQUIRED SERVICES.
   D. AFTER EACH INSPECTION AND TEST, THE INDEPENDENT TESTING/INSPECTION COMPANY SHALL PROMPTLY SUBMIT TWO COPIES OF LABORATORY REPORT TO THE ENGINEER, AND TWO COPIES TO THE OWNER.
   E. STRUCTURAL STEEL FABRICATION SHALL BE IN COMPLIANCE WITH AISC 360, CHAPTER N.
10. WHERE REQUIRED BY CHAPTER 17 OF THE INTERNATIONAL BUILDING CODE (IBC), THE OWNER WILL EMPLOY A STRUCTURAL ENGINEER TO PERFORM STRUCTURAL OBSERVATIONS AS DEFINED BY IBC CHAPTER 17:
    A. THE STRUCTURAL ENGINEER SHALL PROVIDE VISUAL OBSERVATION OF THE STRUCTURAL SYSTEM FOR GENERAL CONFORMANCE TO THE APPROVED PLANS AND SPECIFICATIONS, AT SIGNIFICANT CONSTRUCTION STAGES AND AT COMPLETION OF THE STRUCTURAL SYSTEM. STRUCTURAL OBSERVATION DOES NOT INCLUDE OR WAIVE THE RESPONSIBILITY FOR SPECIAL INSPECTIONS.
    B. THE STRUCTURAL ENGINEER SHALL REPORT ANY OBSERVED DEFICIENCIES TO THE OWNER, CONTRACTOR, AND BUILDING OFFICIAL, AND SHALL SUBMIT A FINAL SUMMARY REPORT STATING SITE VISITS HAVE BEEN COMPLETED, THAT ALL DEFICIENCIES HAVE BEEN RESOLVED, AND THAT THE STRUCTURAL SYSTEM ADEQUATELY CONFORMS TO THE APPROVED PLANS AND SPECIFICATIONS.

CONSTRUCTION LOADS

1. STRUCTURES HAVE BEEN DESIGNED FOR OPERATIONAL LOADS ON THE COMPLETED STRUCTURE. DURING CONSTRUCTION, CONTRACTOR SHALL PROTECT STRUCTURE BY BRACING AND BALANCING WHEREVER EXCESSIVE CONSTRUCTION LOADS MAY OCCUR.
2. CONTRACTOR SHALL PROVIDE ALL TEMPORARY SHORING AND BRACING NEEDED FOR STABILITY UNTIL STRUCTURE IS COMPLETE.

DESIGN LOADS: IBC 2021 EDITION

DEAD LOAD	
STRUCTURE, COMPONENTS, AND EQUIPMENT:	SELF-WEIGHT
ROOF/FLOOR SUPERIMPOSED DL (FOR CABLE TRAY, PIPING, DUCTWORK, LIGHTING AND FLAT ROOF):	50 PSF
LIVE LOAD	
GROUND FLOOR (STORAGE AREAS):	250 PSF
STAIRS:	100 PSF
PLATFORMS AND WALKWAYS:	100 PSF
ELEVATED CONCRETE FLOORS (ELECTRICAL ROOMS):	150 PSF
ELEVATED CONCRETE FLOORS (CONTROL ROOMS):	125 PSF
ELEVATED CONCRETE FLOORS (OFFICE SPACE):	100 PSF
ELEVATED STEEL GRATED PLATFORMS:	100 PSF
ROOF:	20 PSF
CONCENTRATED LOAD AT MID-SPAN BEAM GROUND FLOOR/STORAGE AREAS:	4500 LBS
UNLESS NOTED OTHERWISE:	2000 LFB
USE OF LIVE LOAD REDUCTION IN ACCORDANCE WITH IBC 2021 SECTION 1607.11 SHALL BE INDICATED FOR EACH TYPE OF LIVE LOAD USED IN THE DESIGN IF APPLICABLE.	
SNOW LOAD	
GROUND SNOW (Pg):	0 PSF
FLAT-ROOF SNOW LOAD (Pf):	0 PSF
EXPOSURE FACTOR (Ce):	1.0
THERMAL FACTOR (Ct):	1.0
IMPORTANCE FACTOR (Is):	1.2
WIND LOAD	
RISK CATEGORY:	IV
BASIC WIND SPEED (3-SECOND GUST) (OWNER MANDATED):	154 MPH
EXPOSURE CATEGORY:	C
PARTIALLY OPEN BUILDING	
TOPOGRAPHIC FACTOR (Kzt):	1.0
WIND DIRECTIONALITY FACTOR (Kd):	0.85
INTERNAL PRESSURE COEFFICIENT (GCpi):	±0.18
SEISMIC	
RISK CATEGORY:	IV
IMPORTANCE FACTOR (Ie):	1.5
SOIL SITE CLASS:	E
SHORT PERIOD MAPPED SPECTRAL RESPONSE (S_S):	0.086
LONG PERIOD MAPPED SPECTRAL RESPONSE (S_1):	0.053
SHORT PERIOD SITE COEFFICIENT (Fa)	2.4
LONG PERIOD SITE COEFFICIENT (Fv)	4.2
ADJUSTED SHORT PERIOD 5% DAMPED RESPONCE (Sms)	0.206
ADJUSTED LONG PERIOD 5% DAMPED RESPONCE (Sm1)	0.223
SHORT PERIOD SPECTRAL RESPONSE (SDS)	0.138
LONG PERIOD SPECTRAL RESPONCE (SD_1)	0.149
SEISMIC DESIGN CATEGORY:	D
ANALYSIS PROCEDURE USED: EQUIVALENT LATERAL FORCE METHOD DESIGN BASE SHEAR	TBD
BASIC SEISMIC FORCE RESISTING SYSTEM:	
FUEL FORWARDING PUMP PLATFORM:	
SEISMIC RESPONSE COEFFICIENT (C_S)	0.089
RESPONSE MODIFICATION FACTOR COEFFICIENT (R)	3.25
DESIGN BASE FLOOD ELEVATION	0.0 NAVD
FLOOD	
FLOOD HAZARD AREA	AE
RAIN	
BASIC 100-YEAR HOURLY RAINFALL	5.43
HURRICANE/TORNADO STORM SHELTER	10.75 IN/HR
100 YR HOURLY RAINFALL RATE	

GENERAL ABBREVIATIONS

AB = ANCHOR BOLT
BC = BOLT CIRCLE
BM = BEAM
BOS = BOTTOM OF STEEL
BP = BASE PLATE
CHKD = CHECKERED
CJ = CONTROL OR CONSTRUCTION JOINT
CL = CENTERLINE
CLR = CLEAR
CMU = CONCRETE MASONRY UNIT
COL = COLUMN
CONC = CONCRETE
CONN = CONNECTION
CONT = CONTINUOUS
DIA = DIAMETER
DBL = DOUBLE
DET = DETAIL
DWG = DRAWING
EA = EACH
EAE = ENGINEER APPROVED EQUAL
EF = EACH FACE
EJ = EXPANSION JOINT
EL = ELEVATION
EQ = EQUALLY
EW = EACH WAY
EX = EXISTING
EXT = EXTERIOR
FD = FLOOR DRAIN
FL = FLOOR ELEVATION
FS = FAR SIDE
GA = GAGE
GALV = GALVANIZED
GR = GRADE
HP = HIGH POINT
HSA = HEADED STUD ANCHOR
HORIZ = HORIZONTAL
INT = INTERIOR
INV = INVERT
JT = JOINT
KSF = KIPS PER SQUARE FOOT
LG = LONG
LLBB = LONG LEG BACK TO BACK
LLH = LONG LEG HORIZONTAL
LLV = LONG LEG VERTICAL
LP = LOW POINT
MAX = MAXIMUM
MIN = MINIMUM
MSL = MEAN SEA LEVEL
MTL = METAL
NS = NEAR SIDE
NTS = NOT TO SCALE
OC = ON CENTER
OPP = OPPOSITE
PLCS = PLACES
PL = PLATE
PROJ = PROJECTION
PSF = POUNDS PER SQUARE FOOT
QTY = QUANTITY
RAD = RADIUS
REF = REFERENCE
REQ'D = REQUIRED
SIM = SIMILAR
SLBB = SHORT LEG BACK TO BACK
SLV = SLEEVE
SP = SPACING
SPEC = SPECIFICATION
SS = STAINLESS STEEL
STD = STANDARD
T & B = TOP AND BOTTOM
THK = THICK
TOC = TOP OF CONCRETE
TOM = TOP OF MASONRY
TOS = TOP OF STEEL
TOW = TOP OF WALL
TS = TUBE STEEL
TYP = TYPICAL
UON = UNLESS OTHERWISE NOTED
VERT = VERTICAL
W/ = WITH
WF = WIDE FLANGE
WL = WORK LINE
WP = WORKING POINT

REV.	DATE	DESCRIPTION	BY
0	03/18/26	ISSUED FOR BID	DB

STATE OF LOUISIANA
DEAN A. BROOKINS
License No. 38750
PROFESSIONAL ENGINEER
CIVIL ENGINEERING
03/18/26

ENGINEER: DEAN BROOKINS
LICENSE #: 38750

WSP USA INC.
ONE PENN PLAZA, 10TH FLOOR
NEW YORK, NY 10119
CERTIFICATE OF REGISTRATION # EF.0009023

DATE	11/25/2025	JOB NO.	0247759

DESIGNED BY: D. BROOKINS
FILE NAME: S00-01.dwg

SEWERAGE AND WATER BOARD OF NEW ORLEANS

CONTRACT No. 1444
WEST POWER COMPLEX @ CWTP
FUEL OIL DELIVERY SYSTEM

STRUCTURAL
GENERAL NOTES

DR:	M. BESCHNETT
CK:	D. BROOKINS
AP:	D. BROOKINS
LAST EDIT:	
SCALE:	AS NOTED
DATE:	12/05/2025

A/E DWG NO. S00-01
DWG. No. 12196-W-24
SET NO:
SHEET NO: 36 OF 72

BID PACKAGE - NOT FOR CONSTRUCTION

3/18/2026 11:55:35 AM

GENERAL STRUCTURAL STEEL NOTES:

1. DESIGN, FABRICATION, AND ERECTION OF STRUCTURAL AND MISCELLANEOUS STEEL SHALL CONFORM TO THE AMERICAN INSTITUTE OF STEEL CONSTRUCTION (AISC) "SPECIFICATION FOR STRUCTURAL STEEL BUILDINGS" (AISC 360-16), "CODE OF STANDARD PRACTICE FOR STRUCTURAL STEEL BUILDINGS AND BRIDGES", (AISC 303-16), AND "SEISMIC PROVISIONS FOR STRUCTURAL STEEL BUILDINGS" (AISC 341-16).
2. STRUCTURAL STEEL SHALL CONFORM TO ASTM A992, GRADE 50, EXCEPT CHANNELS, ANGLES, AND PLATES SHALL CONFORM TO ASTM A36. HSS SHALL CONFORM TO ASTM A500, GRADE C. PIPE SHALL CONFORM TO ASTM A53, TYPE E OR S, GRADE B.
3. HIGH STRENGTH BOLTS SHALL BE ¾ " DIAMETER IN 13/16 " DIAMETER OPEN HOLES, UON. BOLTS SHALL CONFORM TO ASTM F3125, GRADE A325 OR A490, LATEST EDITIONS.
4. NUTS SHALL CONFORM TO ASTM A563, GRADE A AND WASHERS SHALL CONFORM TO ASTM F436, LATEST EDITIONS.
5. SHOP CONNECTIONS SHALL BE WELDED OR BOLTED. FIELD CONNECTIONS SHALL BE BOLTED, UON. ALL STRUCTURAL BOLTED CONNECTIONS SHALL BE MADE WITH HIGH-STRENGTH BOLTS.
6. HIGH STRENGTH BOLTED CONNECTIONS SHALL CONFORM TO THE REQUIREMENTS OF THE RESEARCH COUNCIL ON STRUCTURAL CONNECTIONS (RCSC) "SPECIFICATION FOR STRUCTURAL JOINTS USING HIGH-STRENGTH BOLTS."
7. ALL HIGH STRENGTH BOLTED CONNECTIONS SHALL BE DESIGNED AS BEARING-TYPE WITH THREADS INCLUDED (TYPE N), UON. BEARING TYPE CONNECTIONS SHALL BE INSTALLED SNUG TIGHT AS DEFINED BY AISC, UON.
8. CONNECTIONS FOR OVERSIZED HOLES AND BRACING CONNECTIONS SHALL BE SLIP CRITICAL, UON. SLIP CRITICAL CONNECTIONS SHALL HAVE A CLASS A FAYING SURFACE
9. PRETENSIONED OR SLIP-CRITICAL CONNECTIONS SHALL USE ONE OF THE FOLLOWING PRETENSIONING INSTALLATION METHODS:
   A. TURN-OF-THE-NUT
   B. CALIBRATED WRENCH
   C. TWIST-OFF-TYPE TENSION-CONTROL: BOLT SPLINE COMPLYING WITH ASTM F3125, GRADE F1852.
   D. DIRECT-TENSION-INDICATOR: DIRECT-TENSION-INDICATOR CONFORMING TO ASTM F959.
10. GUSSET PLATES, STIFFENER PLATES, AND CONNECTION ANGLES SHALL HAVE A THICKNESS OF NOT LESS THAN ⅜".
11. INCORRECTLY FABRICATED, DAMAGED, OR OTHERWISE MISFITTING OR NON-CONFORMING MATERIALS OR CONDITIONS SHALL BE REPORTED TO ENGINEER PRIOR TO REMEDIAL OR CORRECTIVE ACTION. ANY SUCH ACTION SHALL REQUIRE ENGINEER APPROVAL.
12. ALL CONNECTIONS SHALL BE DOUBLE ANGLE, FRAMED BEAM CONNECTIONS CONFORMING TO THE REQUIREMENTS OF PART 10 OF THE AISC STEEL CONSTRUCTION MANUAL, 16TH EDITION, UON.
13. ALL WELDING SHALL CONFORM TO THE AMERICAN WELDING SOCIETY (AWS) D1.1 "STRUCTURAL WELDING CODE - STEEL", LATEST EDITION. ALL WELDING ELECTRODES SHALL BE E70 SERIES.
14. FILLET WELD SIZES SHALL BE NOT LESS THAN 3/16", UON.
15. GRATING SHALL BE WELDED STEEL 1½ X 3/16 BEARING BARS AT 1 3/16 " ON CENTER, AND CROSS BARS AT 4" ON CENTER (MARK W-19-4 (1½ X 3/16) STEEL), UON. GRATING FOR EXTERIOR USE SHALL HAVE SERRATED BEARING BARS. GRATING SHALL BE HOT DIP GALVANIZED.
16. CHECKERED PLATE SHALL BE RAISED PATTERN TYPE, CONFORMING TO ASTM A786, LATEST EDITION; MINIMUM THICKNESS OF PLATE SHALL BE ¼ ".
17. ALL STRUCTURAL STEEL EXPOSED TO WEATHER SHALL BE HOT-DIPPED GALVANIZED AFTER FABRICATION AND AFTER ALL HOLES FOR CONNECTIONS ARE DRILLED, UON.
18. NO OPENINGS SHALL BE CUT IN STRUCTURAL MEMBERS UNLESS SHOWN ON THE DRAWINGS, OR APPROVED BY ENGINEER.
19. ALL BEARING PLATES SHALL BE SET WITH NON-SHRINK GROUT.
20. AFTER GROUT UNDER BASE/BEARING PLATES HAS CURED, AND PRIOR TO THE ADDITION OF ANY ADDITIONAL LOADS, ANCHOR BOLTS SHALL BE TIGHTENED TO THE "SNUG-TIGHT" POSITION, WITH A MANUAL OR IMPACT WRENCH.
21. CONTRACTOR SHALL PROVIDE ALL TEMPORARY BRACING REQUIRED TO MAINTAIN PLUMBNESS AND STABILITY DURING ERECTION. THIS BRACING SHALL NOT BE REMOVED UNTIL: ALL PERMANENT BRACING AND SHEAR WALLS HAVE BEEN INSTALLED; ALL WELDING HAS BEEN COMPLETED; ALL BOLTS HAVE BEEN PROPERLY TIGHTENED; SUPPORTING ROOF DECK HAS BEEN INSTALLED; CONCRETE FLOOR SLAB(S) HAVE BEEN PROPERLY PLACED; AND, CONCRETE HAS ACHIEVED ITS 28-DAY STRENGTH.
22. TESTS AND SPECIAL INSPECTIONS SHALL BE PERFORMED FOR STRUCTURAL STEEL AS SPECIFIED IN STEEL NOTES TABLE 1.

PROJECT STRUCTURAL STEEL NOTES:

CONNECTIONS

1. FOR DOUBLE ANGLE BRACING, PRETENSIONED BOLTED OR WELDED INTERMEDIATE CONNECTORS (STITCH PLATES) SHALL BE PROVIDED PER TYPICAL STEEL DETAILS. QUANTITY AND SPACING OF CONNECTIONS SHALL CONFORM TO THE REQUIREMENTS OF PART 4 OF THE AISC STEEL CONSTRUCTION MANUAL.
2. FRAMED BEAM CONNECTIONS SHALL BE DETAILED IN ACCORDANCE WITH THE FOLLOWING:
   A. BEAM CONNECTIONS SHALL BE MADE WITH BOLTS SPACED AT 3" ON CENTER MINIMUM, UON.
   B. THE MINIMUM DISTANCE FROM THE CENTER OF THE HOLE TO FREE EDGE OF CONNECTED PART IN DIRECTION OF FORCE OR DISTANCE OF HOLE TO END OF BEAM WEB SHALL BE 1.5 TIMES THE BOLT DIAMETER.
   C. THE MINIMUM NUMBER OF BOLT ROWS PER DOUBLE ANGLE CONNECTIONS SHALL BE AS INDICATED BELOW:

BOLTS

BEAM SIZE	NO. OF ROWS (TYP)	MIN CLIP ANGLE THICKNESS
W36	10	½"
W33	9	½"
W30	8	½"
W27, W24	7	½"
W21	6	½"
W18	5	½"
W16	4	⅜"
W14	3	⅜"
C12 OR W12	3	⅜"
C10 OR W10	3	⅜"
W10 (PLF < = 30)	2	⅜"
C8 OR W8	2	⅜"
C6 OR W6, W5, W4	1 *	⅜"

* PROVIDE TWO BOLTS PER ANGLE LEG MINIMUM.

3. ALL BOLT HOLES SHALL BE DRILLED OR PUNCHED. BURNING OF HOLES IS NOT PERMITTED IN THE SHOP OR IN THE FIELD.

ANCHOR BOLTS

1. ANCHOR BOLTS SHALL CONFORM TO ASTM F1554, GRADE 36 (UON).
2. ADHESIVE ANCHORS SHALL BE "HILTI HIT-HY 200R V3 ADHESIVE ANCHOR SYSTEMS", UON, OR ENGINEER APPROVED EQUAL.

GROUTING

1. GROUT UNDER ALL COLUMN BASE PLATES.
2. UNLESS OTHERWISE NOTED, BASE PLATES SHALL BE SHIMMED WITH STEEL SHIMS BEFORE GROUTING. LEVELING NUTS SHALL NOT BE USED WITHOUT PRIOR APPROVAL BY ENGINEER.
3. GROUTING SHALL TAKE PLACE IMMEDIATELY AFTER THE FIRST TIER FRAMING HAS BEEN PLUMBED AND BOLTED.
4. GROUT SHALL BE A NONSHRINK, NONCORROSIVE, NONSTAINING, NATURAL AGGREGATE (NONMETALLIC) GROUT AND SHALL BE A PREMIXED, PACKAGED TYPE, INSTALLED IN STRICT ACCORDANCE WITH THE MANUFACTURER'S DIRECTIONS. GROUT SHALL HAVE A MINIMUM COMPRESSIVE STRENGTH OF 5,000 PSI AT 7 DAYS.

ACCEPTABLE GROUTS

SEALTIGHT 588 GROUT	BY R.W. MEADOWS, INC
FIVE STAR GROUT	BY FIVE STAR PRODUCTS
EUCO NS GROUT	BY EUCLID CHEMICAL Co.
SIKAGROUT 212	BY SIKA CORPORATION
MASTERFLOW 928 GROUT	BY BASF
EDOCO NON-FERROUS, NON-SHRINK GROUT	BY DAYTON SUPERIOR

TEST REPORTS

TWO COPIES OF CERTIFIED MILL TEST REPORTS ON ALL ASTM MATERIALS USED IN THIS WORK SHALL BE FURNISHED TO THE ENGINEER.

SHOP DRAWINGS

SHOP DRAWINGS SHALL BE SUBMITTED TO THE ENGINEER FOR APPROVAL BEFORE THE START OF FABRICATION. CONTRACTOR'S LICENSED PROFESSIONAL ENGINEER SHALL CONFIRM IN WRITING THAT THE SHOP AND ERECTION DRAWINGS PROPERLY INCORPORATE THE CONNECTIONS DESIGNED BY THE CONTRACTOR'S ENGINEER.

WELDING

1. WELDING SHALL BE PERFORMED IN ACCORDANCE WITH AWS D1.1 "STRUCTURAL WELDING CODE - STEEL."
2. WELDER CERTIFICATION PROCEDURES SHALL BE AS FOLLOWS:
   A. ALL WELDERS SHALL BE CURRENTLY CERTIFIED AND REGISTERED BY THE LOCAL BUILDING OFFICIALS AND/OR THE AMERICAN WELDING SOCIETY AND, IF REQUIRED, ALL WELDERS SHALL HAVE THEIR CERTIFICATION AVAILABLE TO THE ENGINEER.
   B. A COPY OF CERTIFIED WELDING PROCEDURES NOT PREQUALIFIED BY AWS SHALL BE SUBMITTED FOR INFORMATION.
3. ALL BUTT WELDS SHALL BE COMPLETE PENETRATION WELDS, UON.
4. WHERE SIZE OF THE FILLET WELD OR PARTIAL PENETRATION WELD IS NOT SHOWN, IT SHALL BE IN ACCORDANCE WITH AISC 360, SECTION J2.
5. WELDING PROCEDURE AND SEQUENCES SHALL BE PLANNED TO MINIMIZE WELD SHRINKAGE THAT COULD RESULT IN LAMELLAR TEARING.
6. ALL GROOVE WELDS SHALL BE COMPLETE PENETRATION WELDS.
7. FIELD WELDING WILL BE PERMITTED ONLY WHERE INDICATED ON THE DRAWINGS.
8. EXISTING AND NEW STEEL SURFACES TO BE WELDED SHALL BE CLEANED OF PAINT, GREASE, SCALE OR OTHER FOREIGN MATERIAL.
9. ALL FIELD WELDS SHALL BE WIRE BRUSHED AND CLEANED, THEN PRIMED.
10. NO WELDING WILL BE PERMITTED TO EXISTING BEAM OR COLUMN FLANGES EXCEPT AS INDICATED ON THE DRAWINGS.

REV.	DATE	DESCRIPTION	BY
0	03/18/26	ISSUED FOR BID	DB

STATE OF LOUISIANA — DEAN A. BROOKINS — License No. 38750 — PROFESSIONAL ENGINEER — CIVIL ENGINEERING — 03/18/26

ENGINEER: DEAN BROOKINS
LICENSE #: 38750

WSP USA INC.
ONE PENN PLAZA, 4TH FLOOR,
NEW YORK, NY 10119
CERTIFICATE OF REGISTRATION # EF 0000023

DATE	11/25/2025	JOB NO.	0247759

DESIGNED BY: D. BROOKINS
FILE NAME: S00-02.dwg

SEWERAGE AND WATER BOARD OF NEW ORLEANS

CONTRACT No. 1444

WEST POWER COMPLEX @ CWTP
FUEL OIL DELIVERY SYSTEM

STRUCTURAL

STEEL GENERAL NOTES

DR:	M. BESCHNETT
CK:	D. BROOKINS
AP:	D. BROOKINS
LAST EDIT:	
SCALE:	AS NOTED
DATE:	12/05/2025

A/E DWG NO. S00-02

DWG. No. 12196-W-24

SET NO: SHEET NO: 37 OF 72

3/18/2026 11:30:27 AM

BID PACKAGE - NOT FOR CONSTRUCTION

GENERAL STEEL NOTES (CONTINUED):

STEEL COATING

GENERAL

1. EXPOSED STEEL LOCATED INSIDE BUILDINGS (INCLUDING LADDERS, HANDRAIL, GUARDRAIL, TOE PLATE AND SAFETY GATES) SHALL BE HOT-DIPPED GALVANIZED AFTER FABRICATION.
2. STEEL EXPOSED TO WEATHER (INCLUDING LADDERS, HANDRAIL, GUARDRAIL, TOE PLATE AND SAFETY GATES) SHALL BE HOT-DIP GALVANIZED, UON.
3. STEEL ENCASED IN CONCRETE OR TO RECEIVE FIREPROOFING SHALL NOT BE PAINTED.

GALVANIZING

1. STEEL SURFACES TO BE GALVANIZED SHALL BE CLEANED IN ACCORDANCE WITH SSPC SP 6.
2. MATERIAL SPECIFIED TO BE GALVANIZED SHALL BE HOT-DIP GALVANIZED AFTER FABRICATION ON THE SAME DAY THE SURFACE IS SANDBLASTED OR PICKLED. GALVANIZING SHALL OCCUR BEFORE ASSEMBLY BY BOLTING. GALVANIZING PROCEDURES SHALL BE IN ACCORDANCE WITH ASTM A123, A153 AND A385.
3. IF A BOLTED JOINT IS SPECIFIED AS A SLIP-CRITICAL CONNECTION, THE CONNECTION FAYING SURFACES SHALL BE LEFT UNCOATED OR GALVANIZED FAYING SURFACES SHALL BE ROUGHENED BY HAND WIRE BRUSHING PER THE REQUIREMENTS OF RCSC "SPECIFICATION FOR STRUCTURAL JOUNTS", SECT 3.2.2.(3).
4. CLIPS AND OTHER STRUCTURAL COMPONENTS THAT ARE TO RECEIVE WELDING SHALL NOT BE COATED UNTIL AFTER WELDING IS COMPLETE.
5. REPAIR DAMAGED AND UNCOATED AREAS OF HOT-DIP GALVANIZING IN ACCORDANCE WITH ASTM A780.

STEEL GRATING

1. STEEL GRATING SHALL CONFORM TO NAAMM MBG 531, "METAL BAR GRATING MANUAL FOR STEEL, STAINLESS STEEL, AND ALUMINUM GRATINGS AND STAIR TREADS."
2. STEEL FOR RECTANGULAR SECTION BEARING BARS, CROSS BARS AND CONNECTING BARS SHALL CONFORM TO ASTM A1011 TYPE B.
3. WIRE ROD FOR GRATING CROSS BARS SHALL CONFORM TO ASTM A510.
4. FLOOR GRATING SHALL BE PROVIDED AS INDICATED ON THE CONTRACT DRAWINGS. WELD BANDING BARS TO PERIMETER OF ALL GRATINGS.
5. FOR THOSE ITEMS INDICATED TO BE GALVANIZED, APPLY COATING BY THE HOT-DIP PROCESS IN ACCORDANCE WITH ASTM A123. HOT-DIP GALVANIZE WITH A COATING WEIGHT OF NOT LESS THAN 1.8 OZ/SQ FT OF COATED SURFACE.
6. FLOOR GRATING SHALL BE FASTENED TO STRUCTURAL MEMBERS SO AS TO PERMIT REMOVAL. PROVIDE FOR EACH GRATING A MINIMUM OF FOUR 16 GAGE GALVANIZED SADDLE CLIPS SECURED WITH HEX-HEAD Dp5 SELF DRILLING SCREW, OR ENGINEER APPROVED ALTERNATE FASTENERS.
7. FABRICATE CUTOUTS IN GRATING SECTIONS FOR PENETRATIONS INDICATED. ARRANGE CUTOUTS TO PERMIT GRATING REMOVAL WITHOUT DISTURBING ITEMS PENETRATING GRATINGS. EDGE-BAND OPENINGS IN GRATING THAT INTERRUPT FOUR OR MORE BEARING BARS WITH BARS OF THE SAME SIZE AND MATERIAL AS BEARING BARS.
8. BAND ALL EDGES OF GRATING UNLESS OTHERWISE NOTED.
9. DO NOT NOTCH BEARING BARS AT SUPPORTS TO MAINTAIN ELEVATION.
10. PROVIDE ¼" CLEARANCE BETWEEN SECTIONS OF GRATING AND ¼" CLEARANCE AT HANDRAIL TOE PLATE.

STEEL ERECTION

1. TOLERANCES FOR ERECTION OF THE STRUCTURAL STEEL SHALL CONFORM TO THE "SPECIFICATION FOR STRUCTURAL STEEL BUILDINGS" (AISC 360-16) "CODE OF STANDARD PRACTICE FOR STRUCTURAL STEEL BUILDINGS AND BRIDGES" (AISC 303-16).

TABLE 1

LIST OF TESTS AND SPECIAL INSPECTIONS

IN ACCORDANCE WITH THE INTERNATIONAL BUILDING CODE (IBC) 2021, SECTION 1705.2, THE FOLLOWING MEANS AND METHODS OF CONSTRUCTION ARE SUBJECT TO SPECIAL INSPECTIONS:

VERIFICATION AND INSPECTION TASK	REFERENCED STANDARD
MATERIAL TEST REPORTS AND CERTIFICATIONS	
A. MATERIAL TEST REPORTS AND CERTIFICATIONS FOR ALL STRUCTURAL STEEL ELEMENTS, FASTENERS, WELDING MATERIALS, WELDING PROCEDURES, WELDING PROCEDURE QUALIFICATION RECORDS, WELDER QUALIFICATION RECORDS, QUALITY CONTROL MANUALS AND QUALITY CONTROL INSPECTOR QUALIFICATIONS	AISC 360-16, SECTION N3.2
INSPECTION OF WELDING	
A. INSPECTION PRIOR TO WELDING	AISC 360-16, TABLE N5.4-1
B. INSPECTION DURING WELDING	AISC 360-16, TABLE N5.4-2
C. INSPECTION AFTER WELDING	AISC 360-16, TABLE N5.4-3
D. NONDESTRUCTIVE TESTING OF WELDED JOINTS	AISC 360-16, SECTION N5.5
INSPECTION OF HIGH-STRENGTH BOLTING	
A. INSPECTION PRIOR TO BOLTING	AISC 360-16, TABLE N5.6-1
B. INSPECTION DURING BOLTING	AISC 360-16, TABLE N5.6-2
C. INSPECTION AFTER BOLTING	AISC 360-16, TABLE N5.6-3
INSPECTION OF GALVANIZED STRUCTURAL STEEL MAIN MEMBERS	
A. INSPECTION OF CUT SURFACES OF GALVANIZED STRUCTURAL STEEL MAIN MEMBERS AND EXPOSED CORNERS OF RECTANGULAR HSS FOR CRACKS SUBSEQUENT TO GALVANIZING	AISC 360-16, SECTION N5.7
INSPECTION OF STEEL FRAMES	
A. INSPECTION OF FABRICATED OR ERECTED STEEL FRAMES TO VERIFY COMPLIANCE WITH DETAILS SHOWN ON CONSTRUCTION DOCUMENTS, INCLUDING; BRACES, STIFFENERS, MEMBER LOCATIONS, AND PROPER APPLICATION OF JOINT DETAILS AT EACH CONNECTION	AISC 360-16, SECTION N5.8
INSPECTION OF COLD-FORMED STEEL DECK	
A. PERIODIC INSPECTION OF MARKINGS TO CONFORM TO ASTM STANDARDS SPECIFIED IN THE APPROVED CONSTRUCTION DOCUMENTS	APPLICABLE ASTM MATERIAL STANDARDS
B. PERIODIC INSPECTION OF MANUFACTURER'S CERTIFIED TEST REPORTS	
C. PERIODIC INSPECTION OF FLOOR AND ROOF DECK WELDS	AWS D1.3

REV.	DATE	DESCRIPTION	BY
0	03/18/26	ISSUED FOR BID	DB

STATE OF LOUISIANA
DEAN A. BROOKINS
License No. 38750
PROFESSIONAL ENGINEER
CIVIL ENGINEERING
03/18/26

ENGINEER: DEAN BROOKINS
LICENSE #: 38750

wsp
WSP USA INC.
ONE PENN PLAZA, 4TH FLOOR,
NEW YORK, NY 10119
CERTIFICATE OF REGISTRATION # EP 0000620

DATE	11/25/2025	JOB NO.	0247759

DESIGNED BY: D. BROOKINS
FILE NAME: S00-03.dwg

SEWERAGE AND WATER BOARD OF NEW ORLEANS

CONTRACT No. 1444

WEST POWER COMPLEX @ CWTP
FUEL OIL DELIVERY SYSTEM

STRUCTURAL

STEEL GENERAL NOTES

DR.	M. BESCHNETT
CK:	D. BROOKINS
AP:	D. BROOKINS
LAST EDIT:	
SCALE:	AS NOTED
DATE:	12/05/2025

A/E DWG NO. S00-03

DWG. No. 12196-W-24

SET NO: SHEET NO: 38 OF 72

3/18/2026 11:33:52 AM

BID PACKAGE - NOT FOR CONSTRUCTION

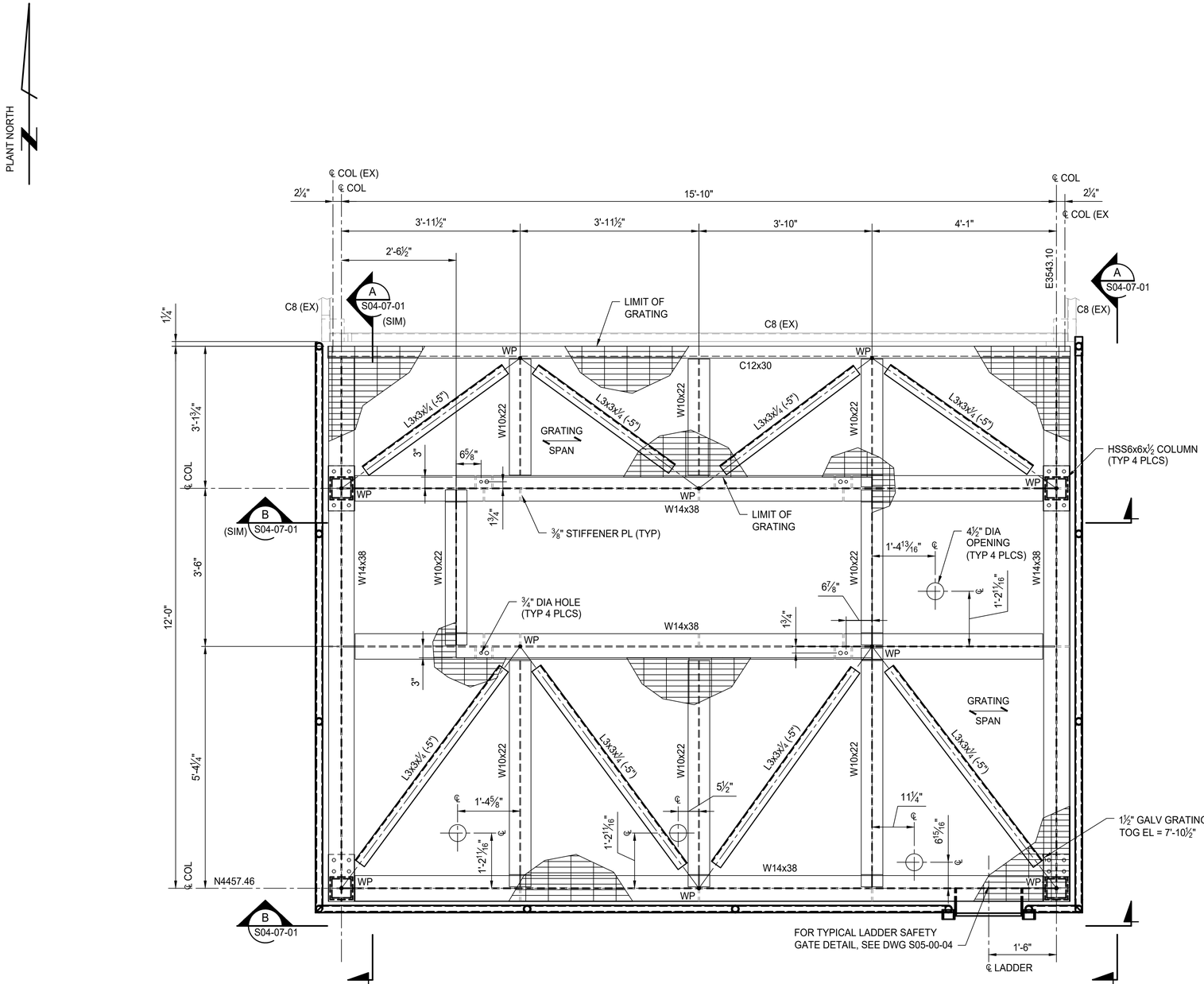

FUEL FORWARDING PUMP PLATFORM PLAN TOS EL = 7'-9" (UON)

SCALE 3/4" = 1'-0"

NOTES

1. FOR STRUCTURAL GENERAL NOTES, SEE DRAWING S00-01.
2. FOR STEEL GENERAL NOTES, SEE DRAWING S00-02 AND S00-03.
3. FOR HORIZONTAL AND VERTICAL BRACING CONNECTION DETAILS, SEE DRAWING S05-00-01.
4. FOR GUARDRAIL DETAILS, SEE DRAWING S05-00-02.
5. FOR GRATING DETAILS, SEE DRAWING S05-00-03.
6. FOR LADDER DETAILS, SEE DRAWING S05-00-04.
7. CONTRACTOR TO PERFORM NON-DESTRUCTIVE TESTING TO LOCATE EXISTING POST TENSION CABLES. NOTIFY ENGINEER IF POST TENSION CABLE LOCATION(S) INTERFERE WITH PROPOSED COLUMN ANCHOR BOLT LOCATIONS.
8. EXISTING FUEL STORAGE CONTAINMENT WALL TOC = 7'-10½". FUEL POLISHER PLATFORM TOP OF GRATING = 7'-10½".

0 1 2 3 FEET

3/4" = 1'- 0"

REV:	DATE	DESCRIPTION	BY
0	03/18/26	ISSUED FOR BID	DB

STATE OF LOUISIANA
DEAN A. BROOKINS
License No. 38750
PROFESSIONAL ENGINEER
IN
CIVIL ENGINEERING
03/18/26

ENGINEER: DEAN BROOKINS
LICENSE #: 38750

WSP USA INC.
ONE PENN PLAZA, 4TH FLOOR,
NEW YORK, NY 10119
CERTIFICATE OF REGISTRATION # EF 2000623

DATE 09/10/25 JOB NO. 0247759

DESIGNED BY: D. BLANCHE
FILE NAME: S03-07-01.dwg

SEWERAGE AND WATER BOARD OF NEW ORLEANS

CONTRACT No. 1444

WEST POWER COMPLEX @ CWTP
FUEL OIL DELIVERY SYSTEM

STRUCTURAL

FUEL FORWARDING PUMP PLATFORM FRAMING PLAN

DR:	M. BESCHNETT
CK:	D. BROOKINS
AP:	D. BROOKINS
LAST EDIT:	
SCALE:	AS NOTED
DATE:	12/05/2025

A/E DWG NO. S03-07-01

DWG. No. 12196-W-24

SET NO: 39 OF 72

BID PACKAGE - NOT FOR CONSTRUCTION

3/18/2026 11:48:51 AM

NOTES

1. FOR STRUCTURAL GENERAL NOTES, SEE DRAWING S00-01.
2. FOR STEEL GENERAL NOTES, SEE DRAWING S00-02 AND S00-03.
3. FOR HORIZONTAL AND VERTICAL CONNECTION DETAILS, SEE DRAWING S05-00-01.
4. FOR GUARDRAIL DETAILS, SEE DRAWING S05-00-02.
5. FOR GRATING DETAILS, SEE DRAWING S05-00-03.
6. FOR LADDER DETAILS, SEE DRAWING S05-00-04.
7. EXISTING FUEL STORAGE CONTAINMENT WALL TOC = 7'-10½". FUEL POLISHER PLATFORM TOP OF GRATING = 7'-10½".

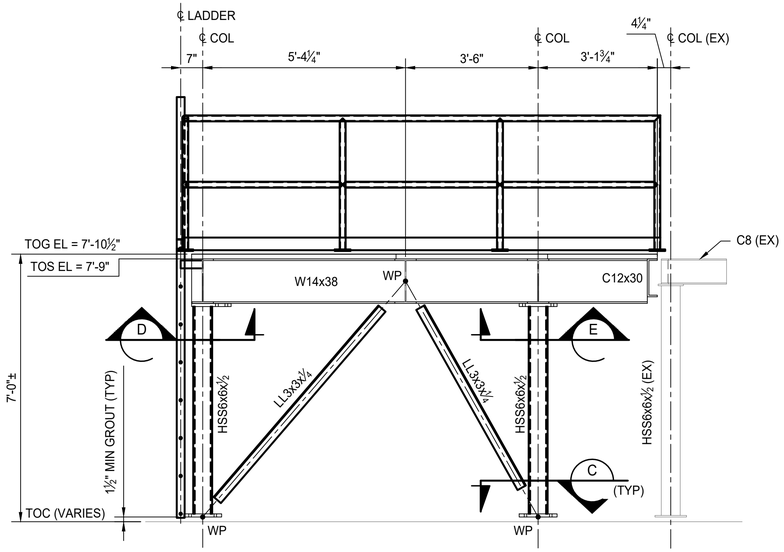

SECTION A
SCALE: 1/2"=1'-0"

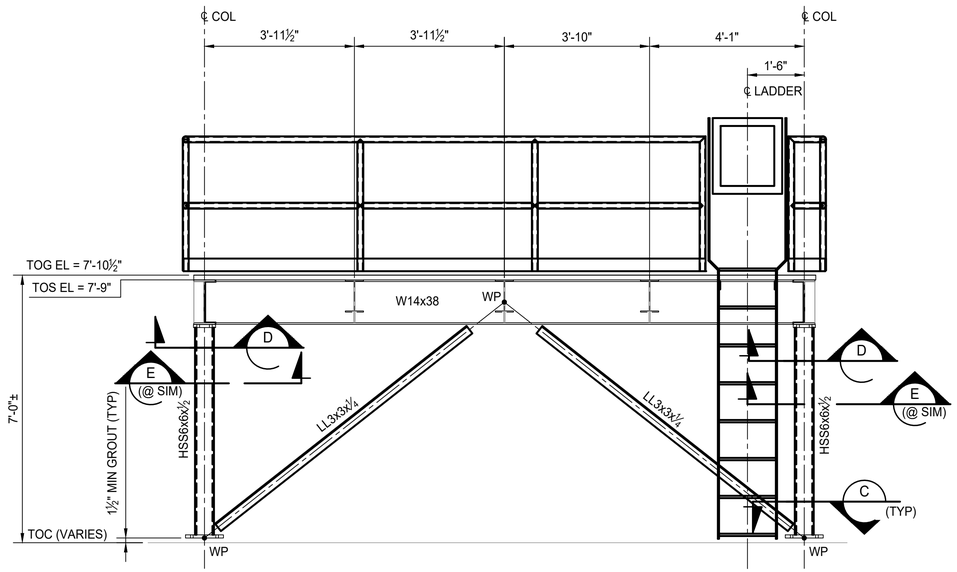

SECTION B
SCALE: 1/2"=1'-0"

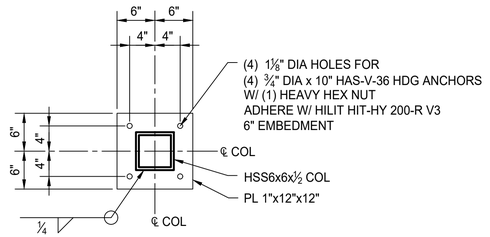

SECTION C
SCALE: 1"=1'-0"
(TYP 4 PLCS)

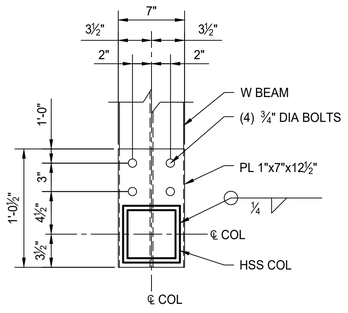

SECTION D
SCALE: 1-1/2"=1'-0"
(TYP 2 PLCS)

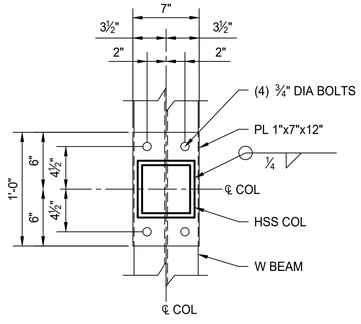

SECTION E
SCALE: 1-1/2"=1'-0"
(TYP 2 PLCS)

0 1 2 3 FEET
3/4" = 1'- 0"

REV:	DATE	DESCRIPTION	BY
0	03/18/26	ISSUED FOR BID	DB

DEAN A. BROOKINS
License No. 38750
PROFESSIONAL ENGINEER
IN
CIVIL ENGINEERING
STATE OF LOUISIANA
03/18/26

ENGINEER: DEAN BROOKINS
LICENSE #: 38750

WSP USA INC.
ONE PENN PLAZA, 4TH FLOOR,
NEW YORK, NY 10119
CERTIFICATE OF REGISTRATION # EF 2000623

DATE	09/10/25	JOB NO.	0247759

DESIGNED BY: D. BLANCHE
FILE NAME: S04-07-01.dwg

SEWERAGE AND WATER BOARD OF NEW ORLEANS

CONTRACT No. 1444
WEST POWER COMPLEX @ CWTP
FUEL OIL DELIVERY SYSTEM

STRUCTURAL

FUEL FORWARDING PUMP PLATFORM FRAMING SECTIONS

DR:	M. BESCHNETT
CK:	D. BROOKINS
AP:	D. BROOKINS
LAST EDIT:	
SCALE:	AS NOTED
DATE:	12/05/2025

A/E DWG NO.
S04-07-01

DWG. No. 12196-W-24

SET NO: SHEET NO: 40 OF 72

3/18/2026 11:49:22 AM

BID PACKAGE - NOT FOR CONSTRUCTION

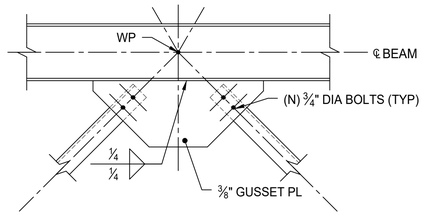

DETAIL 1
SCALE: NTS

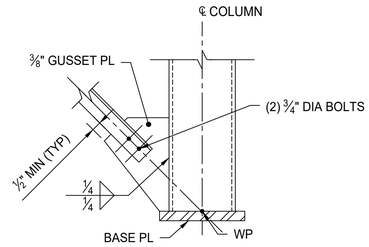

BRACING CONNECTION

DETAIL 2
SCALE: NTS

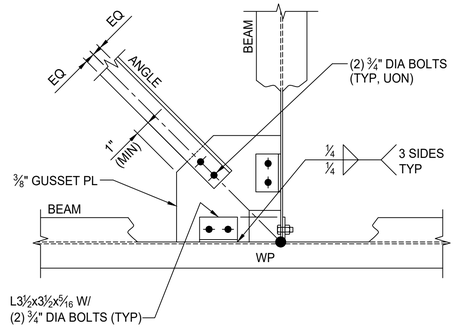

DETAIL 3
SCALE: NTS

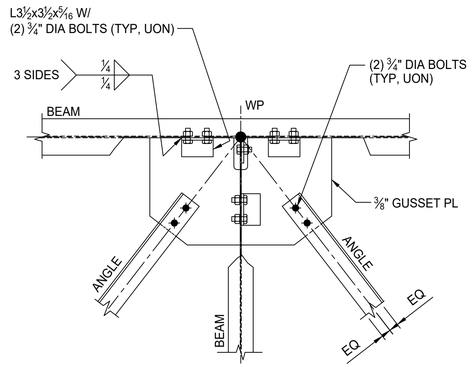

DETAIL 4
SCALE: NTS

REV.	DATE	DESCRIPTION	BY
0	03/18/26	ISSUED FOR BID	DB

STATE OF LOUISIANA
DEAN A. BROOKINS
License No. 38750
PROFESSIONAL ENGINEER
CIVIL ENGINEERING
03/18/26

ENGINEER: DEAN BROOKINS
LICENSE #: 38750

wsp
WSP USA INC.
ONE PENN PLAZA, 4TH FLOOR,
NEW YORK, NY 10119
CERTIFICATE OF REGISTRATION # EF.0000023

DATE	11/25/2025	JOB NO.	0247759

DESIGNED BY: D. BROOKINS
FILE NAME: S05-00-01.dwg

SEWERAGE AND WATER BOARD OF NEW ORLEANS

CONTRACT No. 1444
WEST POWER COMPLEX @ CWTP
FUEL OIL DELIVERY SYSTEM

STRUCTURAL

HORIZONTAL AND VERTICAL BRACING CONNECTION DETAILS

DR:	M. BESCHNETT
CK:	D. BROOKINS
AP:	D. BROOKINS
LAST EDIT:	
SCALE:	AS NOTED
DATE:	12/05/2025

A/E DWG NO.
S05-00-01

DWG. No. 12196-W-24

SET NO: SHEET NO: 41 OF 72

BID PACKAGE - NOT FOR CONSTRUCTION

3/18/2026 11:49:57 AM

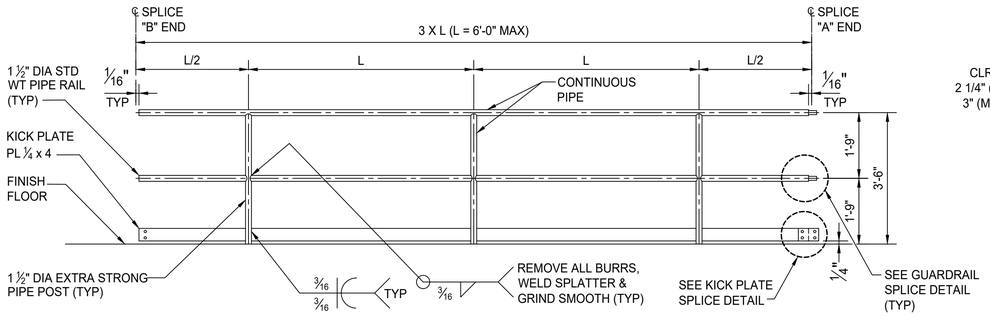

TYPICAL GUARDRAIL ELEVATION

SCALE: NTS

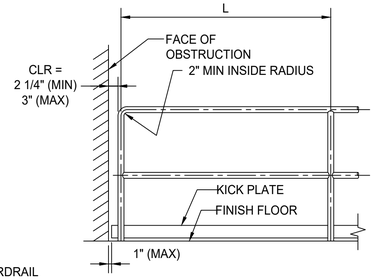

NOTE:
FOR INFO NOT SHOWN
SEE TYP GUARDRAIL ELEVATION

ALT GUARDRAIL END ELEVATION

SCALE: NTS

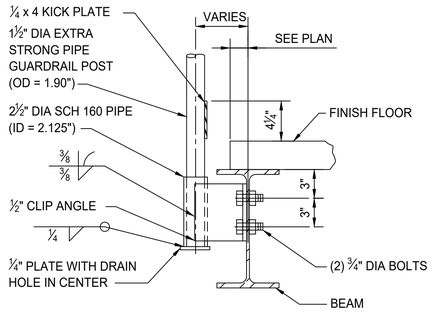

REMOVABLE GUARDRAIL

DETAIL 1/-

SCALE: NTS

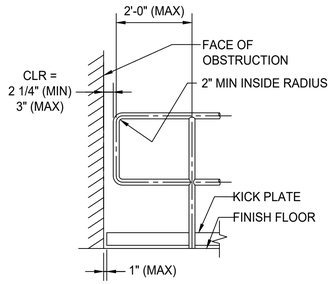

NOTE:
FOR INFO NOT SHOWN
SEE TYP GUARDRAIL ELEVATION

ALT GUARDRAIL END ELEVATION

SCALE: NTS

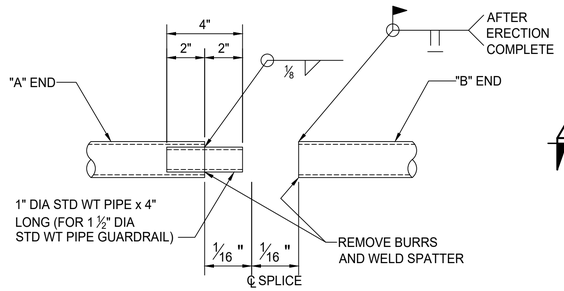

AS SHOWN OR USE APPROVED COMMERCIAL CONNECTION

GUARDRAIL SPLICE DETAIL

SCALE: NTS

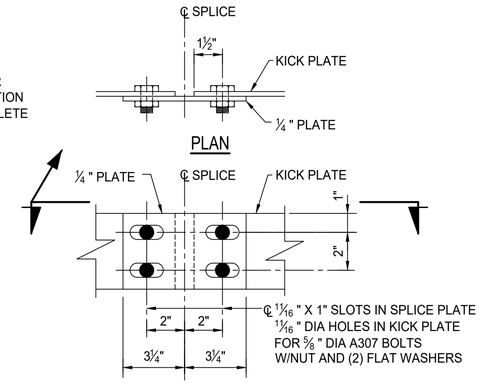

ELEVATION

KICK PLATE SPLICE DETAIL

SCALE: NTS

REV:	DATE	DESCRIPTION	BY
0	03/18/26	ISSUED FOR BID	DB

STATE OF LOUISIANA
DEAN A. BROOKINS
License No. 38750
PROFESSIONAL ENGINEER
IN
CIVIL ENGINEERING
03/18/26

ENGINEER: DEAN BROOKINS
LICENSE #: 38750

WSP USA INC.
ONE PENN PLAZA, 4TH FLOOR,
NEW YORK, NY 10119
CERTIFICATE OF REGISTRATION # EF.0000623

DATE 11/25/2025 JOB NO. 0247759

DESIGNED BY: D. BROOKINS
FILE NAME: S05-00-02.dwg

SEWERAGE AND WATER BOARD
OF NEW ORLEANS

CONTRACT No. 1444
WEST POWER COMPLEX @ CWTP
FUEL OIL DELIVERY SYSTEM

STRUCTURAL

GUARDRAIL DETAILS

DR. M. BESCHNETT
CK: D. BROOKINS
AP: D. BROOKINS
LAST EDIT:
SCALE: AS NOTED
DATE: 12/05/2025

A/E DWG NO.
S05-00-02

DWG. No. 12196-W-24

SET NO: SHEET NO: 42 OF 72

3/18/2026 11:50:29 AM

BID PACKAGE - NOT FOR CONSTRUCTION

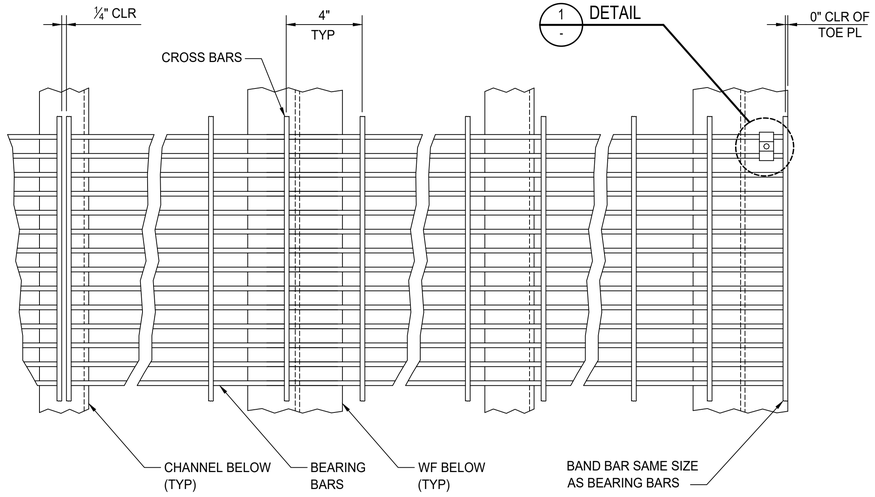

NOTE: BAND ALL EDGES UNLESS OTHERWISE NOTED.

PLAN

SCALE: NTS

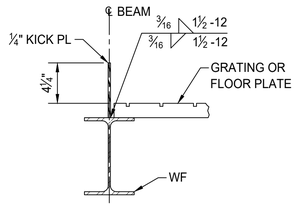

TYPE 1

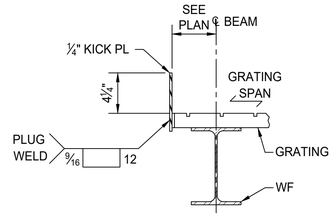

TYPE 1

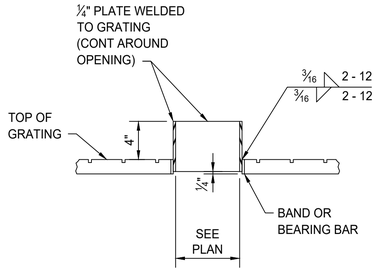

TYPICAL GRATING PENETRATION

DETAIL 4 / -

SCALE: NTS

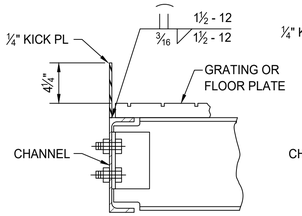

TYPE 2

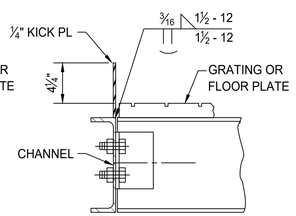

TYPE 3

GRATING OR FLOOR PLATE @ FLOOR EDGE

DETAIL 2 / -

SCALE: NTS

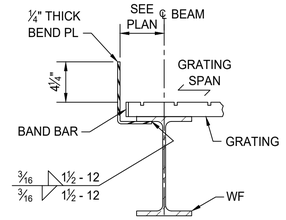

TYPE 2

GRATING CANTILEVER

DETAIL 3 / -

SCALE: NTS

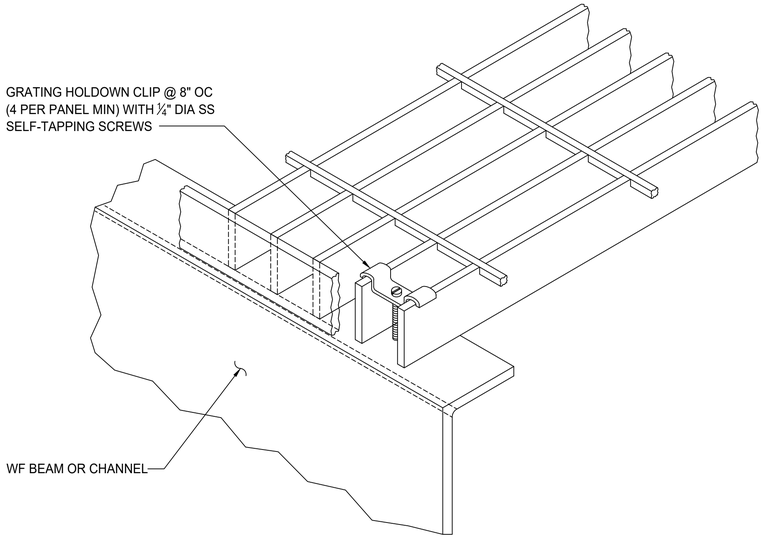

TYPICAL CONNECTION AT GRATING SUPPORT

DETAIL 1 / -

SCALE: NTS

REV.	DATE	DESCRIPTION	BY
0	05/11/26	ISSUED FOR BID	DB

STATE OF LOUISIANA
DEAN A. BROOKINS
License No. 38750
PROFESSIONAL ENGINEER
IN
CIVIL ENGINEERING
5/11/2026

ENGINEER: DEAN BROOKINS
LICENSE #: 38750

WSP USA INC.
ONE PENN PLAZA, 17th FLOOR,
NEW YORK, NY 10119
CERTIFICATE OF REGISTRATION # EF 3000023

DESIGNED BY: D. BROOKINS
FILE NAME: S05-00-03.dwg

SEWERAGE AND WATER BOARD OF NEW ORLEANS

CONTRACT No. 1444

WEST POWER COMPLEX @ CWTP
FUEL OIL DELIVERY SYSTEM

STRUCTURAL

GRATING DETAILS

DR.	M. BESCHNETT
CK:	D. BROOKINS
AP:	D. BROOKINS
LAST EDIT:	
SCALE:	AS NOTED
DATE:	12/05/2025
DATE	11/25/2025
JOB NO.	0247759
A/E DWG NO.	S05-00-03
DWG. No.	12196-W-24
SET NO:	
SHEET NO:	OF

5/11/2026 6:38:12 PM

BID PACKAGE - NOT FOR CONSTRUCTION

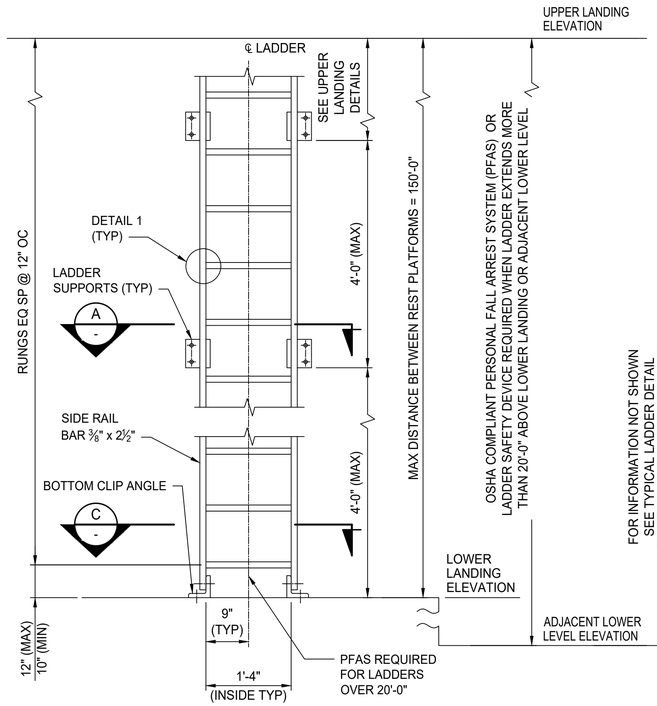

TYPICAL LADDER DETAIL

SCALE: NTS

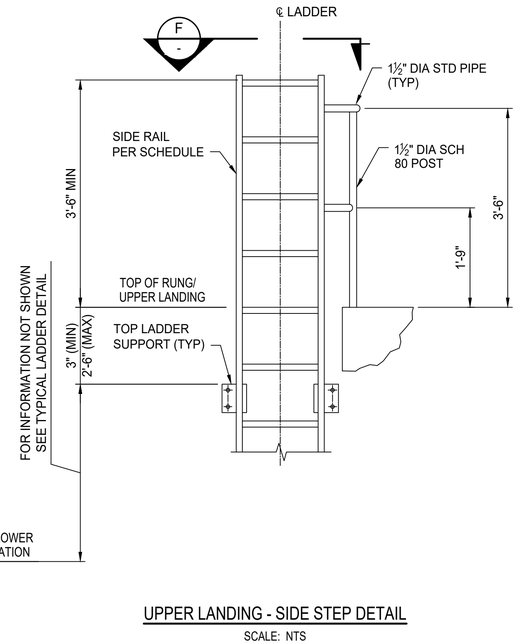

UPPER LANDING - SIDE STEP DETAIL

SCALE: NTS

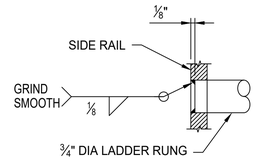

DETAIL 1

SCALE: NTS

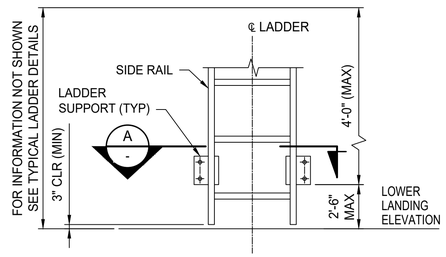

ALTERNATE LOWER LANDING DETAIL

SCALE: NTS

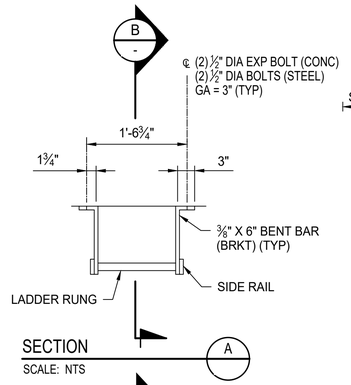

SECTION B

SCALE: NTS

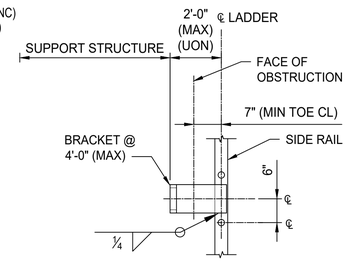

SECTION A

SCALE: NTS

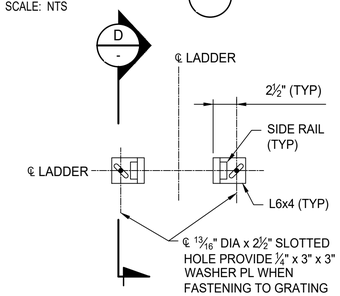

SECTION C

SCALE: NTS

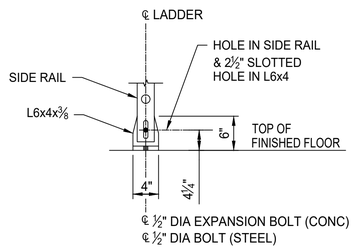

SECTION D

SCALE: NTS

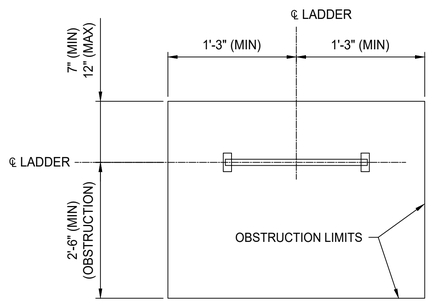

TYPICAL LADDER CLEARANCE W/O CAGE

SCALE: NTS

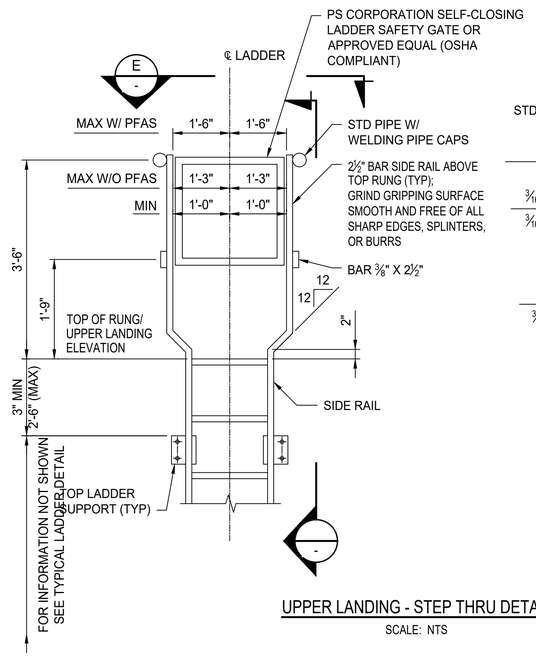

UPPER LANDING - STEP THRU DETAIL

SCALE: NTS

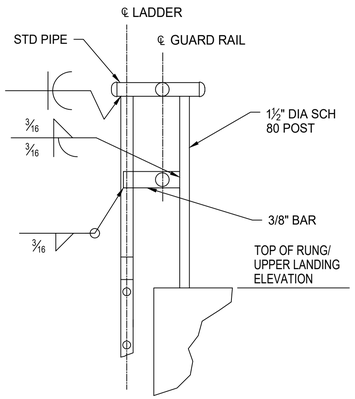

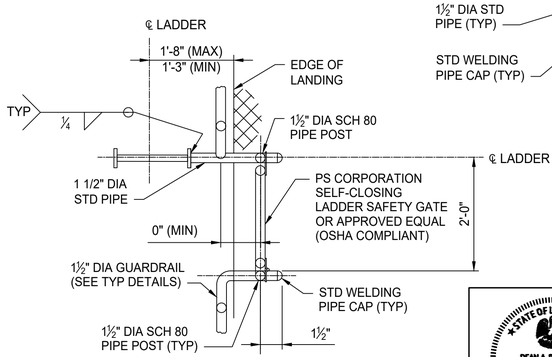

SECTION F

SCALE: NTS

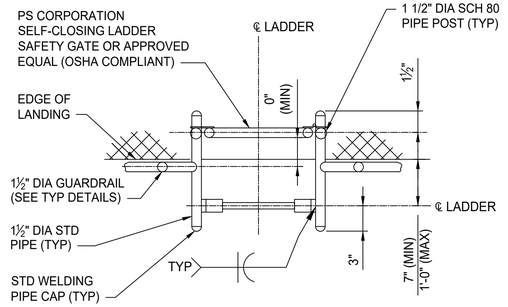

SECTION E

SCALE: NTS

REV.	DATE	DESCRIPTION	BY
0	03/18/26	ISSUED FOR BID	DB

SEWERAGE AND WATER BOARD OF NEW ORLEANS

CONTRACT No. 1444

WEST POWER COMPLEX @ CWTP
FUEL OIL DELIVERY SYSTEM

STRUCTURAL

LADDER DETAILS

STATE OF LOUISIANA
DEAN A. BROOKINS
License No. 38750
PROFESSIONAL ENGINEER
CIVIL ENGINEERING
03/18/26

ENGINEER: DEAN BROOKINS
LICENSE #: 38750

WSP USA INC.
ONE PENN PLAZA, 4TH FLOOR,
NEW YORK, NY 10119
CERTIFICATE OF REGISTRATION # EF.0000023

DATE	11/25/2025	JOB NO.	0247759

DESIGNED BY: D. BROOKINS
FILE NAME: S05-00-04.dwg

DR.	M. BESCHNETT
CK:	D. BROOKINS
AP:	D. BROOKINS
LAST EDIT:	
SCALE:	AS NOTED
DATE:	12/05/2025

A/E DWG NO. S05-00-04

DWG. No. 12196-W-24

SET NO: SHEET NO: 44 OF 72

BID PACKAGE - NOT FOR CONSTRUCTION

3/18/2026 11:48:14 AM

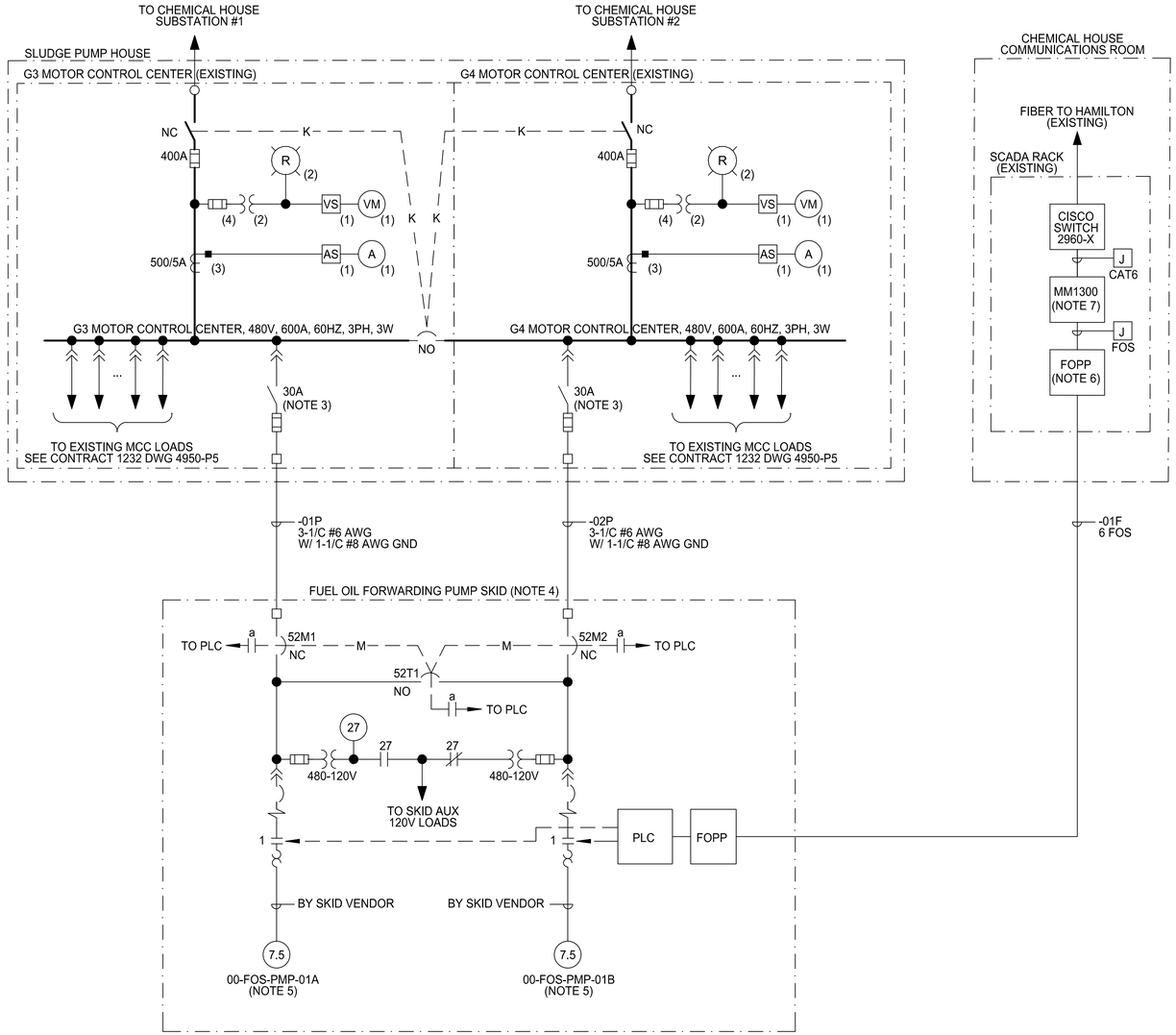

NOTES:

1. ALL CABLES ARE PREFIXED WITH CWPFG00ELAMTR01 UNLESS OTHERWISE NOTED.
2. CONDUCTORS FOR 480V POWER CABLES SHALL BE COLOR CODED AS FOLLOWS:
   PHASE 1: BROWN
   PHASE 2: ORANGE
   PHASE 3: YELLOW
   GROUND CONDUCTORS SHALL BE TAPED GREEN AT BOTH ENDS. WHERE COLORS OF A MULTICONDUCTOR CABLE DO NOT MATCH THIS REQUIREMENT, TAPE BOTH ENDS OF THE CABLE AS REQUIRED.
3. 30A FUSED SWITCHES ARE EXISTING SPARES ON MCC G3 AND G4.
4. FUEL OIL FORWARDING SKID AND ALL ASSOCIATED COMPONENTS SHALL BE PROCURED BY CONTRACTOR. CONTRACTOR SHALL COORDINATE THE DESIGN WITH THE FINAL SKID CONFIGURATION AS DETERMINED BY PUMP SKID SUPPLIER.
5. MOTOR HORSEPOWER IS ESTIMATED. FINAL VALUE SHALL BE DETERMINED BY PUMP SKID SUPPLIER.
6. PORT SHALL BE ASSIGNED ON EXISTING PATCH PANEL(S). CONTRACTOR SHALL COORDINATE WITH SWBNO.
7. CONTRACTOR SHALL PROVIDE A SINGLE MODE MEDIA CONVERTER, BLACK BOX P/N LHC043A-R3, AND INSTALL IN THE EXISTING RACKMOUNT POWER TRAY. MM1300 WILL CONNECT TO EXISTING CISCO SWITCH VIA A CAT6 CONNECTION. CONTRACTOR SHALL COORDINATE PORT ASSIGNMENT WITH SWBNO.

LEGEND:

FOPP	FIBER OPTIC PATCH PANEL
FOS	SINGLE MODE (9 MICRON) FIBER OPTIC CABLE
NO	NORMALLY OPEN
NC	NORMALLY CLOSED
52M1	MAIN BREAKER, WHERE '1' REPRESENTS THE BREAKER NUMBER
52T1	TIE BREAKER, WHERE '1' REPRESENTS THE BREAKER NUMBER
[J]	JUMPER BY CONTRACTOR
— —K— —	KEY INTERLOCK
— —M— —	MECHANICAL INTERLOCK

REV.	DATE	DESCRIPTION	BY
0	03/13/2026	ISSUED FOR BID	MV

STATE OF LOUISIANA
JOSEPH K. BONDANK
License No. 36160
PROFESSIONAL ENGINEER
5/16 / 2026

ENGINEER: JOSEPH K. BONDANK
LICENSE #: PE # 36160

wsp
WSP USA INC.
ONE PENN PLAZA, 5TH FLOOR,
NEW YORK, NY 10119
CERTIFICATE OF REGISTRATION # EF 2030023

DATE	03/13/2026	JOB NO.	174602

DESIGNED BY: M. VILLALTA
FILE NAME: E01-40.dwg

SEWERAGE AND WATER BOARD OF NEW ORLEANS

CONTRACT No. 1444

WEST POWER COMPLEX @ CWTP
FUEL OIL DELIVERY SYSTEM

ELECTRICAL

ONE LINE DIAGRAM - MCC G3/G4 & FUEL OIL FORWARDING SKID

DR.	M. VILLALTA
CK:	R. WHIPPLE
AP:	J. BONDANK
LAST EDIT:	
SCALE:	NONE
DATE:	03/13/2026

A/E DWG NO.
E01-40

DWG. No. 12196-W-24

SET NO:
SHEET NO: 45 OF 72

BID PACKAGE - NOT FOR CONSTRUCTION

3/13/2026
10:12:19 AM

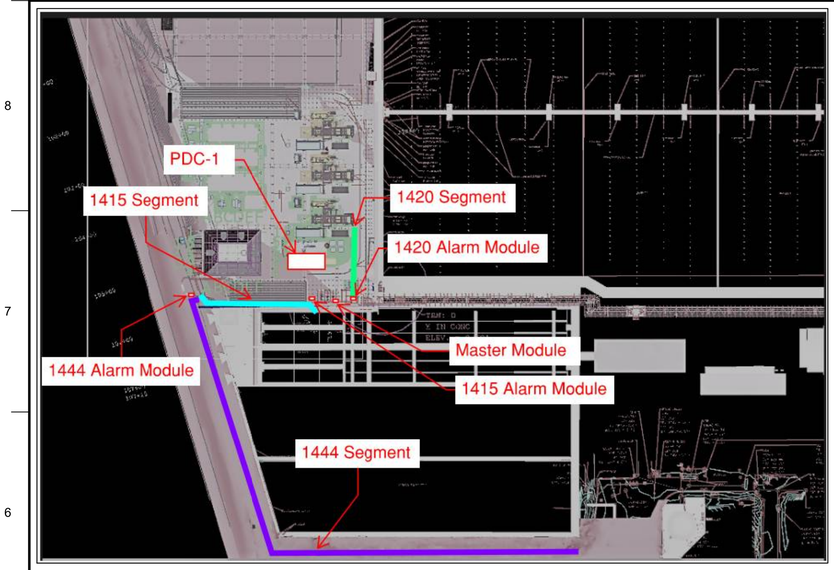

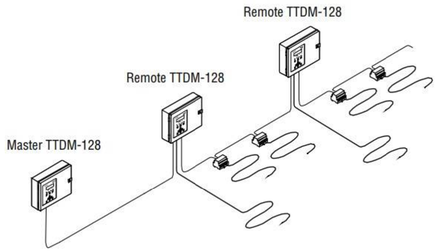

Master TTDM-128 WITH NETWORK SYSTEM (Multiple Remote TTDM-128s and SIMS)

(SEE QUICK SETUP SECTION)

- The same as the single TTDM-128 network system, except with additional TTDM-128's acting as remote modules, and one TTDM-128 acting as Master.
- Additional TTSIM and TT-NRM modules can be installed on the network, up to a total of 127 modules (including TTDM-128's).
- Modbus interface to a host computer is only available at the Master TTDM-128 in this configuration.

NOTES:

(1) A PARTIAL LEAK DETECTION SYSTEM HAS BEEN FURNISHED AND INSTALLED UNDER PREVIOUS CONTRACT 1415 AND 1420. THE INTENT OF THIS DRAWING IS TO SHOW THE REQUIREMENTS FOR THIS CONTRACT 1444, TO EXPAND AND CONNECT THE 1415 & 1420 LEAK DETECTION SYSTEMS FOR THE FUEL OIL PIPING TO BE INSTALLED UNDER THIS CONTRACT 1444. INTEGRATION OF THE OVERALL LEAK DETECTION SYSTEM INTO THE EXISTING PLANT BOP PLC IS DESCRIBED IN OTHER 1444 DOCUMENTS.

(2) THE PARTIAL LEAK DETECTION SYSTEM PROVIDED BY CONTRACT 1415 & 1420 IS A RAYCHEM SYSTEM. THE EXPANDED DESIGN SHOWN ON THIS DRAWING IS BASED ON A RAYCHEM SYSTEM. CONTRACTOR SHALL PROVIDE RAYCHEM SYSTEM COMPONENTS TO EXPAND THE SYSTEM OR AN APPROVED EQUIVALENT SUPPLIER / SYSTEM THAT CAN INTEGRATE SEEMLESSLY WITH THE EXISTING EQUIPMENT. THE FINAL LEAK DETECTION SYSTEM SHALL ACT AS ONE SYSTEM AND NOT SEPARATE SYSTEMS.

(3) A SINGLE TA-SIM-2-120 ALARM MODULE HAS PREVIOUSLY BEEN PROVIDED UNDER CONTRACTS 1415 AND 1420. ONE ADDITIONAL ALARM MODULE SHALL BE PROVIDED UNDER THIS CONTRACT 1444. THE ALARM MODULES SHALL BE PROVIDED WITH ALL REQUIRED INSTALLATION HARDWARE NECESSARY FOR THE PROPER INSTALLATION OF THE FUEL LEAK DETECTION SYSTEM.

(4) A TTDM-128 LEAK DETECTION MASTER HAS PREVIOUSLY BEEN PROVIDED UNDER CONTRACT 1420 TO CONNECT THE ENTIRE LEAK DETECTION NETWORK.

(5) A JUMPER CABLE WILL MAKE THE CONNECTION FROM THE SENSOR CABLE LOCATED IN THE DOUBLE WALLED PIPE TO THE MODULES.

(6) PROVISIONS SHALL BE MADE FOR THE MODULES BE SUITED FOR OUTDOOR USE.
EXAMPLE: INSTALLED IN A NEMA 4X JUNCTION BOX.

(7) CONTRACTOR SHALL COMPLETE FINAL LEAK DETECTION SYSTEM CONNECTIONS BETWEEN SENSOR MODULES AND THE MASTER MODULE, AND THE EXISTING PLANT BOP PLC. CONTRACTOR SHALL COMPLETE THE INTEGRATION AND COMMISSIONING OF THE SYSTEM.

(8) THE TTDM-128 SHALL BE CONNECTED TO THE BOP PLC FOR ALARM PURPOSES.

(9) COMMUNICATION AND POWER CABLES SHALL BE ROUTED IN SEPARATE CONDUITS. WIRING TO TO PDC-1 SHOULD BE ROUTED THROUGH ESTABLISHED CONDUITS. REFER TO DRAWINGS E06-14 & E06-03.

(10) THE FUEL OIL DOUBLE-WALL LEAK DETECTION INFRASTRUCTURE CONTROL PANELS THAT REQUIRE 1P 120VAC POWER SHALL BE SUPPLIED FROM WPCAUX-0-ELP60-PP-501 60Hz 208/120VAC POWER PANEL LOCATED IN PDC-1 (WPCAUX-0-ENCL-PDC-01).

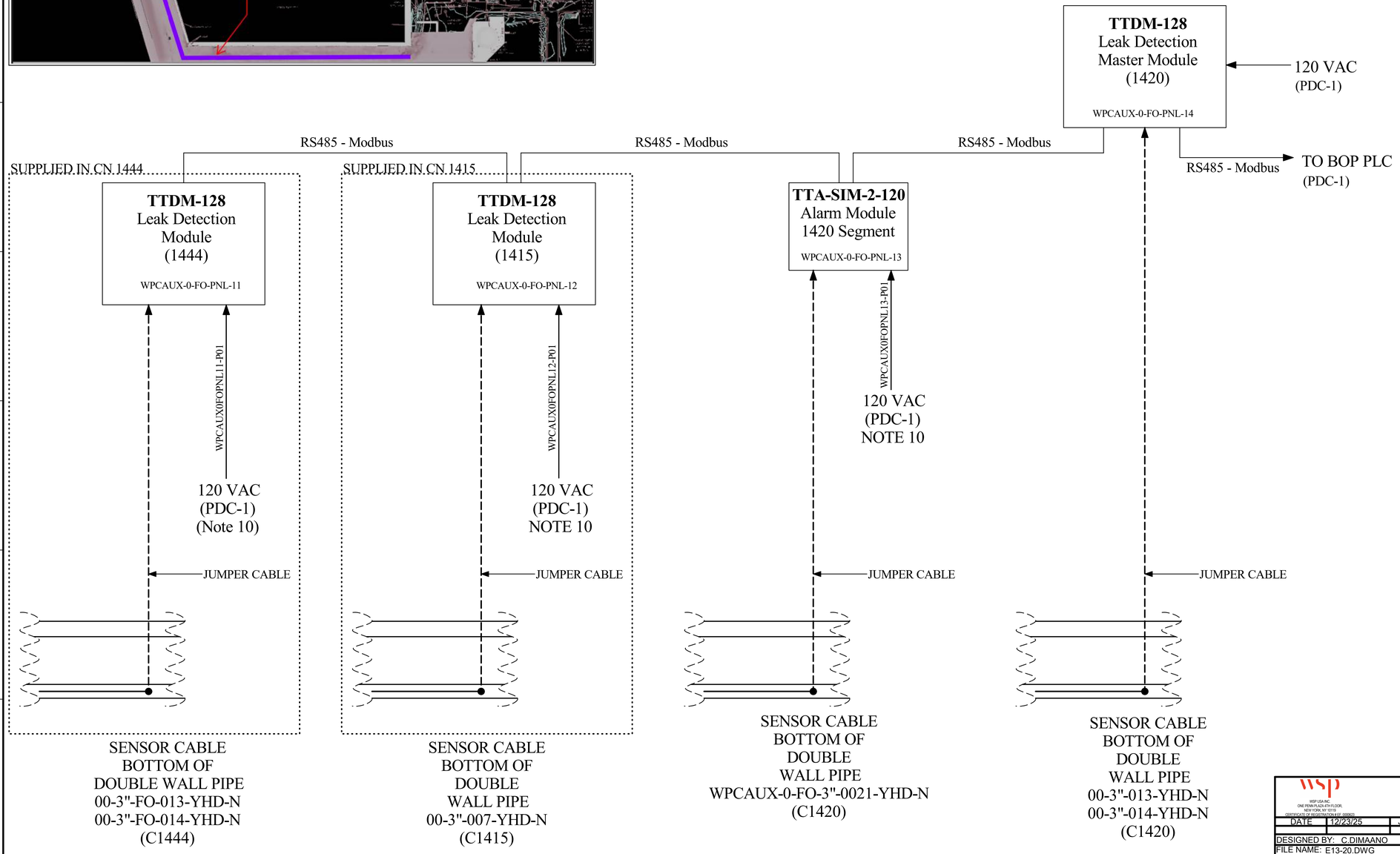

REV.	DATE	DESCRIPTION	BY
0	03/11/25	ISSUED FOR BID	CD

STATE OF LOUISIANA
JOSEPH K. BONDANK
License No. 36160
PROFESSIONAL ENGINEER

WSP USA INC
ONE PENN PLAZA 4TH FLOOR
NEW YORK, NY 10119
CERTIFICATE OF AUTHORIZATION # 001-000923

SEWERAGE AND WATER BOARD OF NEW ORLEANS

CONTRACT No. 1444
WEST POWER COMPLEX
PHASE 1 INSTALLATION AND COMMISSIONING

ELECTRICAL

BLOCK DIAGRAM
FUEL OIL LEAK DETECTION SYSTEM

DR:	C.DIMAANO
CK:	C.DIMAANO
AP:	J.BONDANK
LAST EDIT:	
SCALE:	NTS
DATE:	12/23/25
DATE	12/23/25
JOB NO.	174602
DESIGNED BY:	C.DIMAANO
FILE NAME:	E13-20.DWG
WE DWG NO.	E13-20
DWG. No.	12196-W-24
SET NO:	
SHEET NO.	OF

BID PACKAGE NOT FOR CONSTRUCTION

ELECTRICAL GENERAL NOTES

ELECTRICAL GENERAL NOTES (SUPPLEMENTAL TO SCOPE OF WORK):

1. COORDINATE WITH LOCAL UTILITIES SERVING THIS PROJECT FOR POWER, TELEPHONE AND CABLE TV. CONTRACTOR SHALL INCLUDE IN BASE BID ALL COSTS FOR TRENCHING; BACKFILL, CONDUIT AND CABLING AS REQUIRED FOR COMPLETE AND OPERABLE INSTALLATION OF ALL UTILITY SYSTEMS AND EQUIPMENT.

2. ALL WORK FOR UTILITY COMPANY INSTALLATION SHALL COMPLY WITH UTILITY COMPANY STANDARDS AND REGULATIONS. CONTRACTOR SHALL INSTALL ALL UTILITY COMPANY CONDUITS, STRUCTURES, VAULTS AND PADS, ETC. AS INDICATED ON THE UTILITY COMPANY SERVICE DRAWINGS FOR THIS PROJECT. OBTAIN A COPY OF ALL FINAL UTILITY SERVICE DRAWINGS AND PROVIDE ALL EQUIPMENT AND WIRING AS INDICATED. CONTRACTOR IS RESPONSIBLE FOR ALL INSTALLATION COSTS AND INSPECTION FEES FOR UTILITY COMPANY.

3. THE TERM "PROVIDE" MEANS TO FURNISH AND INSTALL.

4. COMPLY WITH ALL NATIONAL, STATE, COUNTY, CITY, AND LOCAL CODES AND ORDINANCES HAVING JURISDICTION, INCLUDING RULES AND REQUIREMENTS OF UTILITY SERVING AGENCIES.

5. INCORPORATE ALL CODES AND ORDINANCES INTO THE BASE BID AND INSTALLATION OF WORK. NO ADDITIONAL FUNDS WILL BE ALLOCATED FOR WORK REQUIRED TO CONFORM TO REGULATIONS AND REQUIREMENTS AND/OR TO OBTAIN APPROVAL OF WORK.

6. OBTAIN AND PAY FOR ALL REQUIRED PERMITS AND LICENSES.

7. ALL INSTALLATIONS, AT A MINIMUM, SHALL COMPLY WITH THE FOLLOWING CODES AND STANDARDS:

   A. NATIONAL ELECTRIC CODE.
   B. APPLICABLE NFPA STANDARDS.
   C. HEALTH CODES.
   D. FIRE CODE AS ADOPTED BY AUTHORITY HAVING JURISDICTION.
   E. THE NATIONAL ELECTRICAL MANUFACTURER'S ASSOCIATION STANDARDS.
   F. AMERICAN NATIONAL STANDARDS INSTITUTE.
   G. ALL LOCALLY ADOPTED AMENDMENTS, CODES AND ORDINANCES IN THE JURISDICTION OF THIS PROJECT.
   H. ALL ELECTRICAL COMPONENTS AND DEVICES SHALL BE UL LISTED OR LISTED BY OTHER APPROVED TESTING AGENCY.

8. ALL CODES AND STANDARDS SHALL BE THE LATEST EDITIONS AS ADOPTED BY THE AUTHORITY HAVING JURISDICTION FOR THIS PROJECT. CODES AND STANDARDS AS ADOPTED BY THE STATE OF LOUISIANA SHALL BE THE MINIMUM STANDARDS FOR THIS PROJECT. OBTAIN CURRENT COPIES OF ALL LOCALLY ADOPTED CODES AND ORDINANCES PRIOR TO BID AND INCLUDE ALL COSTS TO COMPLY WITH CODES AND ORDINANCES IN BASE BID.

9. DESIGN DRAWINGS ARE DIAGRAMMATIC AND ARE ONLY INTENDED TO DEFINE THE BASIC FUNCTIONS REQUIRED. PROVIDE ALL MATERIAL, ETC. NECESSARY TO ACCOMPLISH THESE REQUIREMENTS. MINOR DEVIATIONS FROM THE DESIGN LAYOUT ARE ANTICIPATED AND ARE A PART OF THE WORK INCLUDED. HOWEVER, NO CHANGES THAT ALTER THE CHARACTER OF THE WORK WILL BE PERMITTED. DO NOT SCALE THE DRAWINGS.

10. IF A CONFLICT OCCURS BETWEEN THE DESIGN DRAWINGS AND SPECIFICATIONS, BRING ANY ISSUES TO THE ATTENTION OF THE ENGINEER.

11. PROVIDE SHOP DRAWING LAYOUT OF ALL ROOMS WITH ELECTRICAL DISTRIBUTION EQUIPMENT. LAYOUT SHALL SHOW LOCATIONS OF ELECTRICAL EQUIPMENT AND SHALL BE DRAWN TO SCALE.

12. MAINTAIN ACCURATE CONTINUOUS RECORDS OF ANY AND ALL CHANGES FROM THE CONTRACT DOCUMENTS AND SHOP DRAWINGS. UPON COMPLETION OF THE PROJECT, DELIVER TO THE OWNER, ONE (1) SET OF LEGIBLE AND REPRODUCIBLE COPIES OF THESE "AS-BUILT" RECORD DRAWINGS.

13. ALL TERMINATIONS AND DEVICES SHALL BE LISTED FOR 75 DEGREES C FOR 100 AMPERE RATED EQUIPMENT AND 60 DEGREES C FOR LESS THAN 100 AMPERE UNLESS NOTED OTHERWISE.

14. ALUMINUM CONDUCTORS SHALL NOT BE USED.

15. THE FOLLOWING CONDUCTOR SIZES SHALL BE PROVIDED FOR 20A, 1PH BRANCH CIRCUITS (HOT, NEUTRAL & GROUND); BASED ON ACTUAL CIRCUIT LENGTH, UPSIZE RACEWAYS ACCORDINGLY.

CONDUCTOR SIZE	120V	208V	277V	480V
#12 AWG	0-70FT.	0-135FT.	0-175FT.	0-300FT.
#10 AWG	71-110FT.	136-200FT.	176-275FT.	301-500FT.
#8 AWG	111-180FT.	201-300FT.	276-455FT.	501-760FT.
#6 AWG	181-300FT.	301-500FT.	456-650FT.	761-1000FT.

16. ALL LIGHTING FIXTURES SHALL BE LED TYPE AND U.L. LISTED OR LISTED BY RECOGNIZED TESTING AGENCY.

17. ALL LAMPS SHALL BE BY THE SAME MANUFACTURER AND FURNISHED BY THE CONTRACTOR UNLESS NOTED OTHERWISE ON THE DRAWINGS. ALL BALLASTS SHALL BE LOW HARMONIC TYPE, THD<10%.

18. PROVIDE SEPARATE NEUTRAL CONDUCTORS FOR ALL GFCI RECEPTACLES OR GFCI CIRCUITS, FOR ALL DIMMING CONTROLLED LIGHTING CIRCUITS, ELECTRONIC EQUIPMENT WITH SWITCHING POWER SUPPLIES AND ALL GAMING BRANCH CIRCUITS.

19. ALL WORK SHALL BE PROPERLY SUPPORTED FROM THE BUILDING STRUCTURE IN AN APPROVED MANNER AND FASTENED TO BUILDING CONSTRUCTION WITH APPROVED SUPPORTS.

20. COORDINATE ELECTRICAL WORK WITH OTHER TRADES PRIOR TO SUBMITTING BID.

21. REFER TO DRAWINGS FOR LOCATION OF ELECTRICAL DEVICES. IF LOCATIONS ARE NOT DEPICTED ON DRAWINGS, OBTAIN APPROVAL OF ENGINEER/OWNER PRIOR TO ROUGH-IN.

22. ALL ELECTRICAL DISTRIBUTION EQUIPMENT SHALL BE OF THE SAME MANUFACTURER, INCLUDING: PANELBOARDS, TRANSFORMERS, DISTRIBUTION PANELS, SWITCHBOARDS, DISCONNECTS, MOTOR STARTERS, ETC.

23. RACEWAYS SHALL BE INSTALLED CONCEALED, UNLESS NOTED OTHERWISE.

24. PROVIDE 200 LB. NYLON PULL STRING IN ALL EMPTY RACEWAYS.

25. RACEWAYS AND OUTLETS PASSING THROUGH OR INSTALLED IN FIRE RATED CONSTRUCTION SHALL BE SEALED WITH U.L. LISTED FIRE RATED SEALANT IN ACCORDANCE WITH SEALANT MANUFACTURERS' RECOMMENDATIONS. WHERE ELECTRICAL RACEWAYS ARE INSTALLED THROUGH RATED FLOORS OR WALLS, THE CONTRACTOR SHALL PROVIDE APPROPRIATE FITTINGS APPROVED BY ALL REQUIRED LOCAL AUTHORITIES FOR THE INTENDED APPLICATION.

26. PROVIDE SEPARATE RACEWAYS FOR ALL "EMERGENCY" SYSTEM WIRING AND "NORMAL" SYSTEM WIRING. ALL EMERGENCY FEEDERS SHALL BE INSTALLED IN COMPLIANCE WITH NEC 700.9(D) AS ADOPTED BY AUTHORITY HAVING JURISDICTION.

27. ALL RACEWAYS AND CONDUCTOR SIZES SHOWN ARE TO BE INSTALLED WITHIN THE BUILDING STRUCTURE NOT EXPOSED TO OUTDOOR OR EXTREME AMBIENT CONDITIONS. IF RACEWAYS AND CONDUCTORS ARE ROUTED EXPOSED TO OUTDOOR AMBIENT CONDITIONS, CONTRACTOR SHALL DERATE CONDUCTORS AND UPSIZE RACEWAYS BASED ON ENVIRONMENT INSTALLED.

28. RACEWAYS PENETRATING THROUGH ROOF SHALL HAVE ROOF PITCH POCKETS AND FLASHING WITH CAULKING AND PIPE SLEEVE. INSTALLATION SHALL BE WATERTIGHT.

29. PROVIDE EXPANSION AND DEFLECTION FITTINGS FOR CONDUITS CROSSING EXPANSION JOINTS. PROVIDE BONDING JUMPERS FOR ALL EXPANSION FITTINGS.

30. PROVIDE SEPARATE BOXES AND RACEWAYS FOR DIFFERENT VOLTAGE SYSTEMS.

31. DO NOT COMBINE HOMERUNS, EXCEPT AS INDICATED ON THE DRAWINGS.

32. CONTRACTOR SHALL "BALANCE" THE LOADS IN ALL PANELBOARDS TO LESS THAN 10% IMBALANCE BETWEEN THE PHASES.

33. PROVIDE TYPEWRITTEN PANELBOARD SCHEDULES TO PANELBOARD DOORS DEPICTING THE FINAL AS-BUILT CONDITIONS AT PROJECT COMPLETION. INDICATE DIVIDE AND ROOM NAME LOCATION (IE: LIGHTING AT LOBBY BAR).

34. ALL ELECTRICAL SYSTEMS, EQUIPMENT AND COMPONENTS SHALL BE GROUNDED IN ACCORDANCE WITH THE NATIONAL ELECTRIC CODE (NEC) ARTICLE 250 AND AS INDICATED ON DOCUMENTS.

35. ALL FLOOR MOUNTED ELECTRICAL DISTRIBUTION EQUIPMENT SHALL HAVE A 4" HIGH HOUSEKEEPING PAD EXTENDING 4" OUTSIDE THE EQUIPMENT FOOTPRINT IN ALL DIRECTIONS.

36. ALL ELECTRICAL DISTRIBUTION EQUIPMENT SHALL BE INSTALLED IN COMPLIANCE WITH NEC 110.26 CLEAR WORKING SPACE REQUIREMENTS.

37. VERIFY WITH PROJECT STRUCTURAL ENGINEER OR RETAIN THE SERVICES OF LICENSED STRUCTURAL ENGINEER TO PROVIDE ANY MOUNTING DIAGRAMS OR CALCULATIONS REQUIRED FOR MOUNTING OF ELECTRICAL EQUIPMENT PRIOR TO ROUGH-IN. ALL COSTS ARE TO BE INCLUDED IN BASE BID.

38. PROVIDE ALL NECESSARY MOUNTING SUPPORTS FOR LIGHTING FIXTURES. WHERE FIXTURES ARE INSTALLED IN SUSPENDED CEILING SYSTEMS, SECURE FIXTURES TO CEILING FRAME SYSTEM AND PROVIDE FIXTURE SUPPORTS INDEPENDENT OF CEILING SUSPENSION SYSTEM AS REQUIRED PER APPLICABLE CODE.

39. RECESSED FIXTURES IN FIRE RATED CEILINGS AND RETURN AIR PLENUMS SHALL BE RATED FOR THE FIRE RATING OF THE CEILING OR SHALL BE FULLY ENCLOSED IN A FIRE RATED HOUSING ACCEPTABLE TO AUTHORITY HAVING JURISDICTION.

40. VERIFY TYPE OF MOUNTING REQUIRED FOR ALL LIGHTING FIXTURES AND PROVIDE ALL MOUNTING HARDWARE REQUIRED FOR A COMPLETE INSTALLATION.

41. ALL ADJUSTABLE FIXTURES SHALL BE LOCATED AND PROPERLY AIMED AS DIRECTED BY THE ARCHITECT OR LIGHTING DESIGNER. ALL AIMING OF BUILDING FACADE LIGHTING SHALL BE PERFORMED BY CONTRACTOR AT NIGHT.

42. CONTRACTOR SHALL BE RESPONSIBLE FOR CORRECT SIZING AND INSTALLATION OF ALL OUTLET, PULL AND JUNCTION BOXES IN ACCORDANCE WITH NFPA 70. ALL BOXES SHALL BE RECESSED WITH COVER PLATE TO SUIT THE INTENDED APPLICATION.

43. ALL ELECTRICAL EQUIPMENT SHALL HAVE SUFFICIENT CONDUIT AND GUTTER SPACE LUGS AND KNOCKOUTS TO ACCOMMODATE QUANTITY AND SIZE OF CONDUCTORS AND CONDUIT REQUIRED. PROVIDE EQUIPMENT WITH OVERSIZED ENCLOSURES WHERE REQUIRED.

44. WHERE MOTORS ARE INSTALLED IN HUNG CEILINGS, PROVIDE DISCONNECT SWITCH IN HUNG CEILING, WITHIN REACH FROM ACCESS POINT.

45. SIZING OF MOTOR-RELATED ELECTRICAL COMPONENTS, INCLUDING FEEDERS, BRANCH CIRCUITS AND OVER-CURRENT PROTECTION ARE BASED ON RATINGS INDICATED. VERIFY "ACTUAL" MOTOR AND APPLIANCE RATINGS AND LOADS AND PROVIDE CORRECTLY SIZED MOTOR-RELATED ELECTRICAL COMPONENTS. REFLECT ALL CHANGES IN THE RECORD DRAWINGS.

46. ALL WIRE AND CONDUIT CALL OUTS SHOWN ARE FOR THE ENTIRE CIRCUIT LENGTH UNLESS SPECIFICALLY NOTED OTHERWISE.

47. PROVIDE ALL REQUIRED SUPPORTS FOR CONDUCTORS IN VERTICAL RACEWAYS PER NEC 300.19.

48. COORDINATE ALL AUXILIARY WORK WITH OWNER'S NETWORK ADMINISTRATOR, OWNER'S SELECTED TELE/DATA CONSULTANTS, TELEPHONE VENDOR, OWNER'S A/V CONSULTANT, FIRE ALARM DESIGN/BUILD CONTRACTOR, OWNER'S SECURITY CONSULTANT AND THEIR ASSOCIATED DRAWINGS PRIOR TO BID AND ROUGH-IN. INCLUDE ALL COSTS FOR SYSTEMS BASE BID.

49. COORDINATE ALL LIGHTING, LIGHT FIXTURE TYPES AND LOCATIONS, ELECTRICAL DEVICES, AND TELE/DATA DEVICES WITH LIGHTING CONSULTANTS, KITCHEN CONSULTANTS, ARCHITECT AND INTERIOR DESIGN CONSULTANTS PRIOR TO SUBMITTING BID AND ROUGH-IN. INCLUDE ALL COSTS FOR IN BASE BID.

50. PROVIDE ALL REQUIRED MOTOR STARTERS, OVER-CURRENT AND DISCONNECTION MEANS FOR EQUIPMENT SPECIFIED BY OTHER DISCIPLINES, WHETHER SPECIFICALLY INDICATED ON THESE DRAWINGS OR NOT. DEVICE WILL HAVE APPROPRIATE SIZE, NUMBER OF POLES AND NEMA RATING FOR INTENDED APPLICATION.

51. PROVIDE HACR TYPE CIRCUIT BREAKERS FOR HVAC EQUIPMENT. VERIFY SIZE WITH MECHANICAL EQUIPMENT SUPPLIER AND/OR MANUFACTURER.

52. PROVIDE UL LISTED FIRESTOP SYSTEMS AT ALL FIRE, DRAFT AND SMOKE WALLS, CEILINGS, FLOORS AND BARRIERS. COORDINATE WITH OTHER CONTRACTORS TO MINIMIZE PENETRATIONS. PROVIDE UL COMPLIANCE SHEETS FOR TYPES OF SYSTEMS USED.

53. ALL CONDUIT SHALL BE RIGID ALUMINUM UNO. EMT CONDUIT IS NOT ALLOWED. PROVIDE EXPANSION FITTINGS IN CONDUIT FOR EACH 100 FEET OF STRAIGHT CONDUIT.

REV.	DATE	DESCRIPTION	BY
0	03/11/2026	ISSUED FOR BID	JCL

STATE OF LOUISIANA
JOHN C. LAWRENCE
REG. NO. 27941
REGISTERED PROFESSIONAL ENGINEER IN ELECTRICAL ENGINEERING
3-11-2026

wsp USA Inc.
ONE PENN PLAZA, 11TH FLOOR,
NEW YORK, NY 10119
CERTIFICATE OF RECORDATION # EF.2000623

FIRM No: LA - EF. 0003709
Infinity Engineering Consultants, LLC
Civil | Structural | Mechanical | Electrical | Marine | Transportation
New Orleans, LA www.infinityec.com 504.304.0568

DATE	03/11/2026	JOB NO.	22-017

DESIGNED BY: J. LAWRENCE
FILE NAME: E1.00 GENERAL NOTES.dwg

SEWERAGE AND WATER BOARD OF NEW ORLEANS

CONTRACT No. 1444

WEST POWER COMPLEX @ CWPT
FUEL OIL DELIVERY SYSTEM

ELECTRICAL

GENERAL NOTES

DR.	R. BOUDREAUX
CK:	J. LAWRENCE
AP:	J. LAWRENCE
LAST EDIT:	
SCALE:	AS NOTED
DATE:	03/11/2026

A/E DWG NO.
E1.00

DWG. No. 12196-W-24

SET NO: SHEET NO: 47 OF 72

BID PACKAGE - NOT FOR CONSTRUCTION

ONE-LINE DIAGRAM LEGEND

- STATUS INDICATING LIGHT COLOR AND FUNCTION AS NOTED
- THERMAL MAGNETIC CIRCUIT BREAKER AMPS FRAME, TRIP, AND POLES AS NOTED
- MCP — MOTOR CIRCUIT PROTECTOR TYPE CIRCUIT BREAKER AMPS FRAME, CONTINUOUS, MAG TRIP, AND POLES AS NOTED
- 10 — MOTOR – HORSEPOWER AS NOTED
- 600/5 3 — METERING CURRENT TRANSFORMER RATIO AND QUANTITY AS NOTED
- ELECTRICAL EQUIPMENT ENCLOSURE FUNCTION AS NOTED
- H O A — MAINTAINED 3 POSITION SELECTOR SWITCH
- MOMENTARY PUSHBUTTON SWITCH
- POWER TRANSFORMER VOLTAGE AND RATING AS NOTED
- METERING POTENTIAL TRANSFORMER
- FUSED CONTROL POWER TRANSFORMER, 480VAC PRI, 120VAC SEC, VA RATING AS NOTED
- KWH — UTILITY METER
- POWER RECEPTACLE, RATING AND POLES AS NOTED
- ELECTRICAL GROUND
- LIGHTNING ARRESTOR
- CARTRIDGE TYPE FUSE, CLASS, VOLTS, AMPS AS NOTED
- FUSED CUTOUT SWITCH POLE MOUNTED
- PILOT DEVICE ENCLOSURE FUNCTION OR SYMBOL AS NOTED
- DISCONNECT SWITCH, RATING AND POLES AS NOTED
- POLE MOUNTED WEATHERHEAD TYPE SERVICE ENTRANCE
- DELTA CONNECTED TRANSFORMER WINDINGS
- WYE CONNECTED TRANSFORMER WINDINGS
- FVNR SIZE 1 — FULL VOLTAGE NON-REVERSING STARTER WITH THERMAL OVERLOAD (NEMA SIZE INDICATED)
- M — MOTOR STARTER COIL
- C — LIGHTING CONTACTOR COIL
- CONTACTOR SIZE 2 — LIGHTING CONTACTOR, SIZE AS SHOWN
- MOTOR SPACE HEATER
- DRAWOUT CIRCUIT BREAKER
- PE — PHOTOELECTRIC CELL

SCHEMATIC DIAGRAM LEGEND

- PUSH BUTTON NORMALLY CLOSED
- PUSH BUTTON NORMALLY OPEN
- 2 POSITION SELECTOR SWITCH
- 3 POSITION SELECTOR SWITCH
- PRESSURE SWITCH N.C. OPENS ON RISING PRESSURE
- PRESSURE SWITCH N.O. CLOSES ON RISING PRESSURE
- LEVEL SWITCH N.C. OPENS ON RISING LEVEL
- LEVEL SWITCH N.O. CLOSES ON RISING LEVEL
- TEMPERATURE SWITCH N.C. OPENS ON RISING TEMPERATURE
- TEMPERATURE SWITCH N.O. CLOSES ON RISING TEMPERATURE
- CONTACT NORMALLY OPEN
- CONTACT NORMALLY CLOSED
- O.L. — MOTOR OVERLOAD THERMAL CONTACT
- TIME DELAY ON ENERGIZE CONTACT (TIMED TO OPEN)
- TIME DELAY ON ENERGIZE CONTACT (TIMED TO CLOSE)
- TIME DELAY ON DE-ENERGIZE CONTACT (TIMED TO CLOSE)
- TIME DELAY ON DE-ENERGIZE CONTACT (TIMED TO OPEN)
- FLOW SWITCH N.C. OPENS ON FLOW
- FLOW SWITCH N.O. CLOSES ON FLOW
- LIMIT SWITCH N.C. OPENS AT LIMIT
- LIMIT SWITCH N.O. CLOSES AT LIMIT
- SPDT SWITCH
- SPST SWITCH
- SV — SOLENOID VALVE
- SPACE HEATER ELEMENT
- FUSE (SIZE INDICATED)
- SINGLE PHASE MAGNETIC CORE XFMR (VOLTS & RATING AS INDICATED)
- WIRE TAP
- WIRE CROSSING NO CONNECTION
- FIELD WIRING REMOTE FROM MOTOR STARTER
- OPERATING COILS- M=MOTOR STARTER COIL, TDR=TIME DELAY RELAY, CR=CONTROL RELAY, C=CONTACTOR
- PILOT LIGHT (COLOR INDICATED)
- TERMINAL BLOCK
- WIRING TERMINAL
- GROUND
- MOTOR POWER THERMAL OVERLOAD
- HORN
- SOLENOID VALVE OPERATOR
- FD — FIRE DETECTOR

GENERAL & PLAN LEGEND

- ABOVE GROUND CONDUIT
- UNDERGROUND CONDUIT
- T/C — TELEPHONE/COMMUNICATION AND DATA CONDUIT
- G — GROUND WIRE
- OHP — OVERHEAD POWER LINE
- SPECIAL PURPOSE RECEPTACLE
- ELECTRIC MOTOR
- CONDUIT UNION OR HUB CONNECTOR
- CONDUIT "T" FITTING
- CONDUIT "L" FITTING
- CONDUIT EXPANSION JOINT
- LIQUIDTIGHT FLEXIBLE METALLIC CORE CONDUIT
- CONDUIT CAP OR PLUG
- CONDUIT TURNING AWAY FROM VIEWER
- CONDUIT TURNING TOWARD & GOING PAST VIEWER
- GROUND WIRE LUGS AND CADWELD
- RECEPTACLE – SINGLE OUTLET 20A, 120V (U.N.O.)
- RECEPTACLE – DUPLEX 20A, 120V (U.N.O.)
- G — RECEPTACLE – DUPLEX G.F.C.I., 20A, 120V (U.N.O.)
- IG/SP — RECEPTACLE – DUPLEX ISOLATED GROUND SURGE SUPPRESSION
- STANCHION MOUNTED LIGHT FIXTURE
- PENDANT MOUNTED LIGHT FIXTURE
- BRACKET/WALL MOUNTED LIGHT FIXTURE
- CEILING MOUNTED LIGHT FIXTURE
- UTILITY POWER POLE
- ANTENNA
- XP — SINGLE RECEPTACLE (EXPLOSION PROOF)
- CONDUIT BOX, C-H TYPE "GUAC"
- CONDUIT BOX, C-H TYPE "GUAT"
- CONDUIT BOX, C-H TYPE "GUAX"
- FLOODLIGHT, C-H TYPE "FMVS"
- G — EYEWASH STATION LIGHTING C-H TYPE "EVBX" WITH 60W GREEN LAMP
- T — THERMOSTAT
- TELEPHONE OUTLET
- $ — SINGLE POLE TOGGLE SWITCH 20A, 120/277V, MTD 48" AFF
- $2 — DOUBLE POLE TOGGLE SWITCH 20A, 120/277V, MTD 48" AFF
- $3 — 3-WAY TOGGLE SWITCH 20A, 120/277V, MTD 48" AFF
- GROUND ROD
- GROUNDWELL
- N — AID TO NAVIGATION LIGHTING FIXTURE
- PB — PULL BOX
- LC — LIGHTING CONTROL CONTACTOR
- XFMR — TRANSFORMER
- PE — PHOTOELECTRIC CELL
- SAFETY SWITCH
- MOMENTARY CONTACT PUSHBUTTON CONTROL STATION
- SINGLE POLE BREAKER
- TWO POLE BREAKER
- THREE POLE BREAKER
- CABLE TRAY

ABBREVIATIONS

A – AMBER OR AMPERE
AC – AMPERE CONTINUOUS
AF – AMPERE FRAME
AM – AMPERE METER
AT – AMPERE TRIP
BOT – BOTTOM
C – CONTACTOT
CPT – CONTROL POWER TRANSFORMER
CR – CONTROL RELAY
CT – CURRENT TRANSFORMER
DPST – DOUBLE POLE SINGLE THROW
DPDT – DOUBLE POLE DOUBLE THROW
DS – DISCONNECT SWITCH
FBO – FURNISHED BY OTHERS
FVNR – FULL VOLTAGE NON-REVERSING
FVR – FULL VOLTAGE REVERSING
GFI – GROUND FAULT INTERRUPTOR
GFCI – GROUND FAULT CIRCUIT INTERRUPT
GND – GROUND
HOA – HAND-OFF-AUTO
JB or J-BOX – JUNCTION BOX
kWH – KILOWATT HOUR
LP – LIGHTING PANEL
LS* – LEVEL SWITCH
MCC – MOTOR CONTROL CENTER
MCP – MOTOR CIRCUIT PROTECTOR
MLO – MAIN LUGS ONLY
MS – MOTOR STARTER
N.C. – NORMALLY CLOSED
N.I.C. – NOT IN CONTRACT
N.O. – NORMALLY OPEN
NVR – NETWORK VIDEO RECORDER
PNL – PANEL
PC – PHOTOCELL CONTROL
PP – POWER PANEL
POE – POWER OVER ETHERNET
PS* – PRESSURE SWITCH
PT – POTENTIAL TRANSFORMER
S/N – SOLID NEUTRAL
S/S – START/STOP
SPST – SINGLE POLE SINGLE THROW
SPDT – SINGLE POLE DOUBLE THROW
SWRK – SWITCHRACK
T OR XFMR – TRANSFORMER
TDR – TIME DELAY RELAY
TOS – TOP OF SLAB/TOP OF STEEL
UNO – UNLESS NOTED OTHERWISE
TS* – TEMPERATURE SWITCH
TVSS – TRANSIENT VOLTAGE SURGE SUPPRESSOR
V – VOLT/VOLTAGE
VFD – VARIABLE FREQUENCY DRIVE
VM – VOLT METER
W – WATT/WATTAGE
* – L(LOW) OR H(HIGH)

CONDUIT & CABLE SCHEDULE LEGEND

- P-XXX — POWER CABLE & CONDUIT NUMBER
- C-XXX — CONTROL CABLE & CONDUIT NUMBER
- PC-XXX — POWER & CONTROL CABLE & CONDUIT NUMBER
- I-XXX — INSTRUMENT CABLE & CONDUIT NUMBER

CLOSED CIRCUIT TELEVISION (CCTV) SYSTEM

SYMBOL	BACKBOX	MOUNTING HEIGHT TO CENTERLINE	POWER	DESCRIPTION
SC	PER VENDOR DRAWINGS	CEILING	PER MFG SPEC	CEILING MOUNTED COLOR CAMERA w/PAN-TILT-ZOOM FOR GENERAL SECURITY
SC	PER VENDOR DRAWINGS	PER VENDOR DRAWINGS	PER MFG SPEC	WALL MOUNTED COLOR CAMERA w/PAN-TILT-ZOOM FOR GENERAL SECURITY
SC	PER VENDOR DRAWINGS	CEILING	PER MFG SPEC	CEILING MOUNTED FIXED COLOR CAMERA FOR GENERAL SECURITY
SC	PER VENDOR DRAWINGS	PER VENDOR DRAWINGS	PER MFG SPEC	WALL MOUNTED FIXED COLOR CAMERA FOR GENERAL SECURITY
PC	PER VENDOR DRAWINGS	CEILING	PER MFG SPEC	CEILING MOUNTED COLOR CAMERA w/VARIFOCAL LENSES FOR EXTERIOR BOUNDARY PENETRATION SECUIRTY
PC	PER VENDOR DRAWINGS	PER VENDOR DRAWINGS	PER MFG SPEC	WALL MOUNTED COLOR CAMERA w/VARIFOCAL LENSES FOR EXTERIOR BOUNDARY PENETRATION SECUIRTY
SM	PER VENDOR DRAWINGS	PER VENDOR DRAWINGS	120 VAC	COLOR MONITOR FOR GENERAL SECURITY OBSERVATION
SM	PER VENDOR DRAWINGS	PER VENDOR DRAWINGS	120 VAC	COLOR MONITOR FOR EXTERIOR BOUNDARY PENETRATION SECURITY OBSERVATION
SER	PER VENDOR DRAWINGS	N/S	120 VAC	SECURITY EQUIPMENT RACK
360°	PER VENDOR DRAWINGS	PER VENDOR DRAWINGS	PER MFG SPEC	SECURITY CEILING MOUNTED COLOR CAMERA, 360° CAMERA LENS FOR HIGH SECURITY

REV.	DATE	DESCRIPTION	BY
0	03/11/2026	ISSUED FOR BID	JCL

STATE OF LOUISIANA
JOHN C. LAWRENCE
REG. NO. 27941
REGISTERED PROFESSIONAL ENGINEER IN ELECTRICAL ENGINEERING
3-11-2026

WSP USA Inc.
ONE PENNSYLVANIA PLAZA 37TH FLOOR
NEW YORK, NY 10119
CERTIFICATE OF REGISTRATION # EF.0000623

Infinity Engineering Consultants, LLC
FIRM No: LA – EF. 0003709
Civil | Structural | Mechanical | Electrical | Marine | Transportation
Metairie, LA www.infinityec.com 504-304-0548

DATE	03/11/2026	JOB NO.	22-017

DESIGNED BY: J. LAWRENCE
FILE NAME: E1.00 GENERAL NOTES.dwg

SEWERAGE AND WATER BOARD OF NEW ORLEANS

CONTRACT No. 1444
WEST POWER COMPLEX @ CWPT
FUEL OIL DELIVERY SYSTEM

ELECTRICAL

GENERAL LEGEND & ABBREVIATIONS

DR:	R. BOUDREAUX
CK:	J. LAWRENCE
AP:	J. LAWRENCE
LAST EDIT:	
SCALE:	AS NOTED
DATE:	03/11/2026

A/E DWG NO. E1.10

DWG. No. 12196-W-24

SET NO: SHEET NO: 48 OF 72

BID PACKAGE - NOT FOR CONSTRUCTION

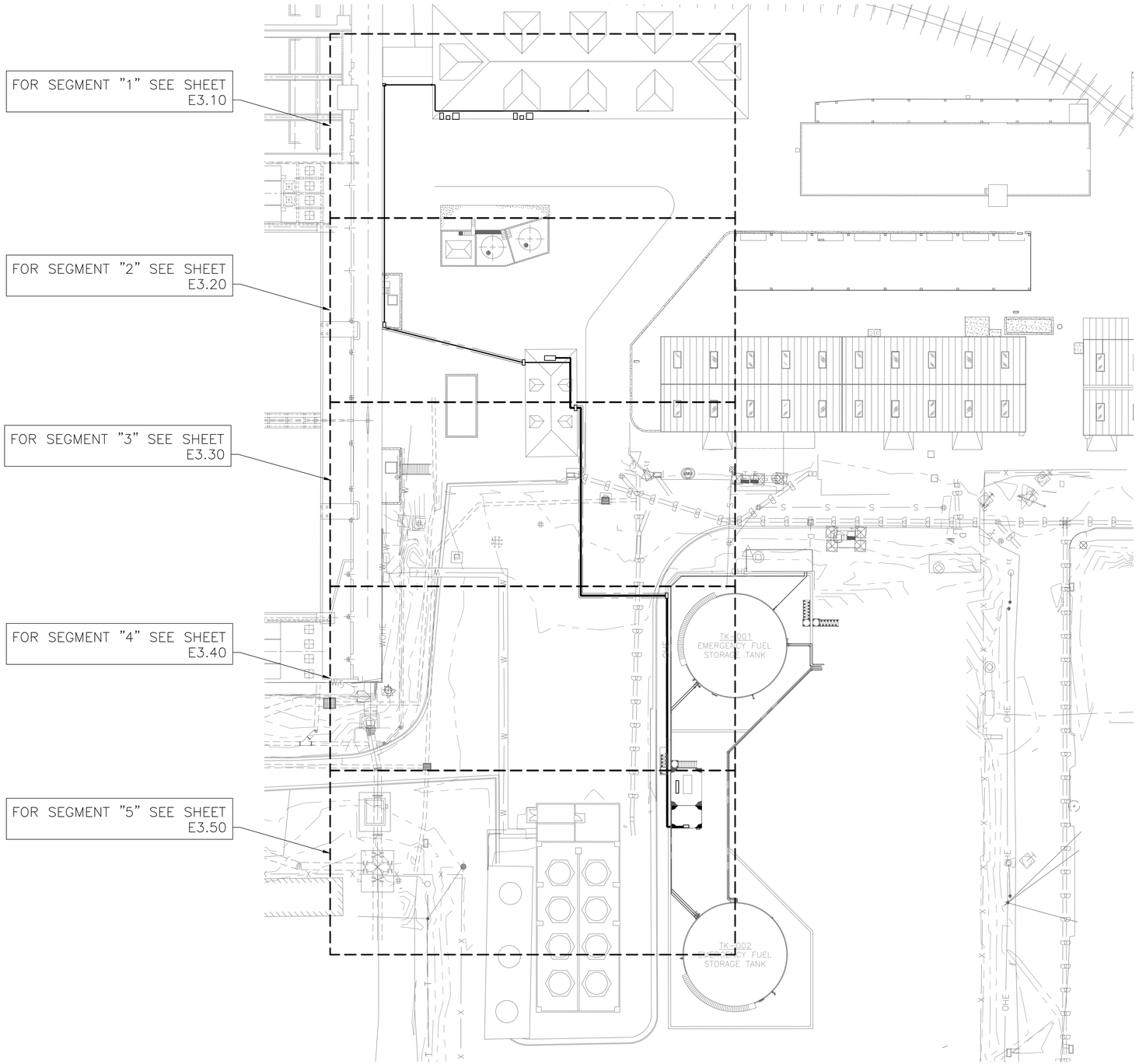

ELECTRICAL KEY PLAN

SCALE: 1/32" = 1'-0"

0 16' 32' 64'

SCALE: 1/32" = 1'-0"

BID PACKAGE - NOT FOR CONSTRUCTION

REV.	DATE	DESCRIPTION	BY
0	03/11/2026	ISSUED FOR BID	JCL

STATE OF LOUISIANA
JOHN C. LAWRENCE
REG. NO. 27941
REGISTERED PROFESSIONAL ENGINEER IN ELECTRICAL ENGINEERING
3-11-2026

WSP USA INC.
ONE PENN PLAZA, 4TH FLOOR,
NEW YORK, NY 10119
CERTIFICATE OF REGISTRATION # EF.0000923

Infinity Engineering Consultants, LLC
AEC Project No. 21-017
Civil | Structural | Mechanical | Electrical | Marine | Transportation
Metairie, LA www.infinityec.com 504-304-0548
FIRM No: LA – EF. 0003709

DATE	03/11/2026	JOB NO.	22-017
DESIGNED BY: J. LAWRENCE			
FILE NAME: E3.00 ELECTRICAL KEY PLAN.dwg			

SEWERAGE AND WATER BOARD OF NEW ORLEANS

CONTRACT No. 1444

WEST POWER COMPLEX @ CWPT
FUEL OIL DELIVERY SYSTEM

ELECTRICAL

ELECTRICAL KEY PLAN

DR.	R. BOUDREAUX
CK:	J. LAWRENCE
AP:	J. LAWRENCE
LAST EDIT:	
SCALE:	AS NOTED
DATE:	03/11/2026

A/E DWG NO. E3.00

DWG. No. 12196-W-24

SET NO: SHEET NO: 49 OF 72

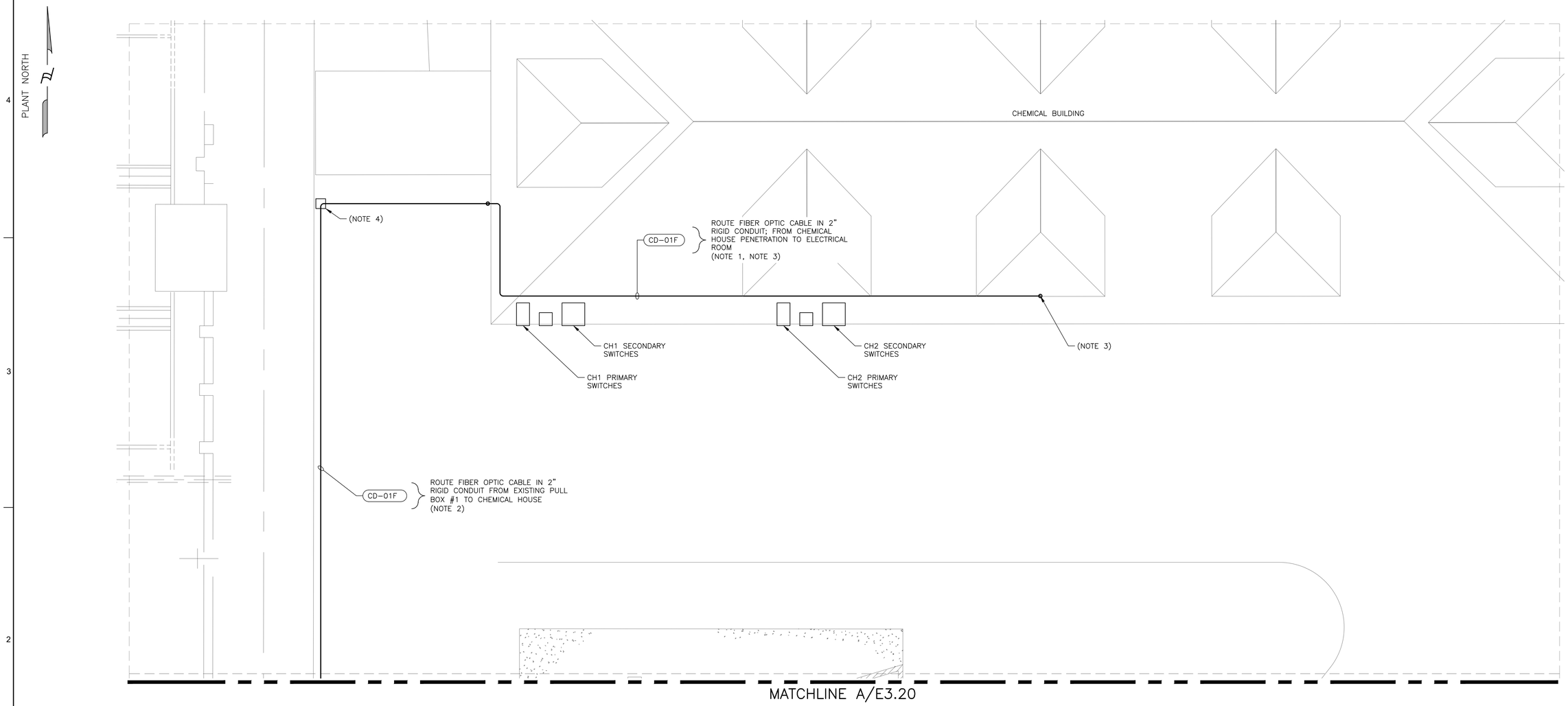

NOTES:

1. RUN CONDUIT OVERHEAD INSIDE BUILDING.
2. RUN ON OUTSIDE OF CONTAINMENT WALL.
3. RUN CONDUIT TO FIBER CABLE JUNCTION BOX LOCATED OUTSIDE ELECTRICAL ROOM; COORDINATE WITH OWNER'S IT GROUP FOR FIBER AND TERMINATIONS.
4. CONTRACTOR TO PROVIDE ADDITIONAL PULL BOXES AS REQUIRED.

ELECTRICAL PLAN 1

SCALE: 1/8" = 1'-0"

0 4' 8' 16'

SCALE: 1/8" = 1'-0"

REV.	DATE	DESCRIPTION	BY
0	03/11/2026	ISSUED FOR BID	JCL

STATE OF LOUISIANA
JOHN C. LAWRENCE
REG. NO. 27941
REGISTERED PROFESSIONAL ENGINEER IN ELECTRICAL ENGINEERING
3-11-2026

WSP USA INC.
ONE PENN PLAZA, 4TH FLOOR,
NEW YORK, NY 10119
CERTIFICATE OF REGISTRATION # EF.2000923

FIRM No: LA – EF. 0003109
Infinity Engineering Consultants, LLC
Civil | Structural | Mechanical | Electrical | Marine | Transportation
Metairie, LA www.infinityec.com 504-304-0548

DATE	03/11/2026	JOB NO.	22-017

DESIGNED BY: J. LAWRENCE
FILE NAME: E3.00 ELECTRICAL KEY PLAN.dwg

SEWERAGE AND WATER BOARD OF NEW ORLEANS

CONTRACT No. 1444

WEST POWER COMPLEX @ CWPT
FUEL OIL DELIVERY SYSTEM

ELECTRICAL

ELECTRICAL PLAN 1

DR:	R. BOUDREAUX
CK:	J. LAWRENCE
AP:	J. LAWRENCE
LAST EDIT:	
SCALE:	AS NOTED
DATE:	03/11/2026

A/E DWG NO. E3.10

DWG. No. 12196-W-24

SET NO: SHEET NO: 50 OF 72

BID PACKAGE - NOT FOR CONSTRUCTION

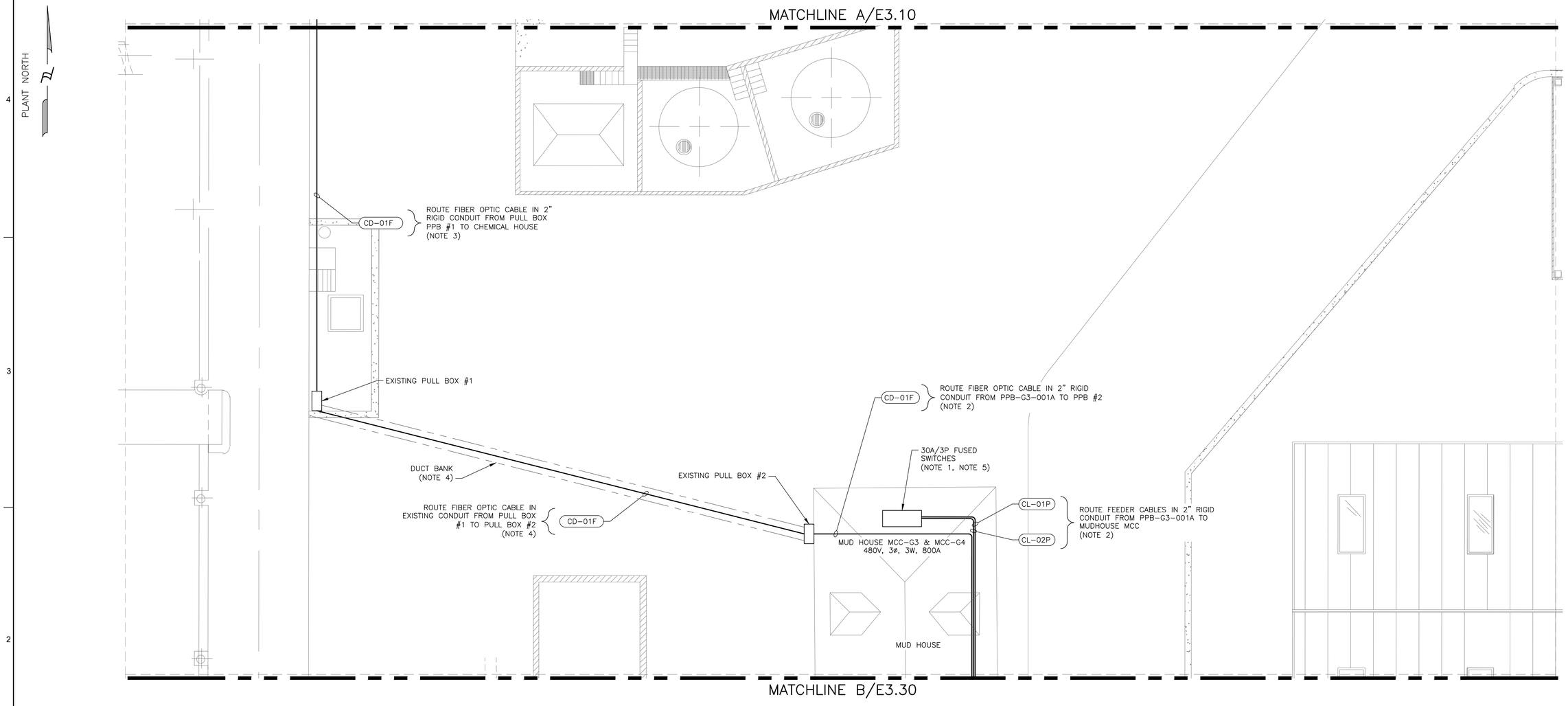

ELECTRICAL PLAN 2

SCALE: 1/8" = 1'-0"

0 4' 8' 16'

SCALE: 1/8" = 1'-0"

NOTES:

1. USE SPARE 30A/3PH SWITCHES IN EXISTING MCC-G3 & MCC-G4.
2. RUN OVERHEAD INSIDE OF BUILDING
3. RUN ON OUTSIDE OF CONTAINMENT WALL.
4. RUN FIBER OPTIC CABLE IN EXISTING UNDERGROUND DUCT BANK SPARE CONDUIT. DUCT BANK SHOWN IN APPROXIMATE LOCATION, CONTRACTOR TO VERIFY LOCATION AND CONDUIT AVAILABILITIES.

REV.	DATE	DESCRIPTION	BY
0	03/11/2026	ISSUED FOR BID	JCL

STATE OF LOUISIANA
JOHN C. LAWRENCE
REG. NO. 27941
REGISTERED PROFESSIONAL ENGINEER IN ELECTRICAL ENGINEERING
3-11-2026

WSP USA Inc.
ONE PENN PLAZA, 11TH FLOOR
NEW YORK, NY 10119
CERTIFICATE OF REGISTRATION # EF.0000023

FIRM No LA - EF. 0003109
Infinity Engineering Consultants, LLC
Civil | Structural | Mechanical | Electrical | Marine | Transportation
Metairie, LA www.infinityec.com 504-304-0148

DATE	03/11/2026	JOB NO.	22-017

DESIGNED BY: J. LAWRENCE
FILE NAME: E3.00 ELECTRICAL KEY PLAN.dwg

SEWERAGE AND WATER BOARD OF NEW ORLEANS

CONTRACT No. 1444

WEST POWER COMPLEX @ CWPT
FUEL OIL DELIVERY SYSTEM

ELECTRICAL

ELECTRICAL PLAN 2

DR:	R. BOUDREAUX
CK:	J. LAWRENCE
AP:	J. LAWRENCE
LAST EDIT:	
SCALE:	AS NOTED
DATE:	03/11/2026

A/E DWG NO. E3.20

DWG. No. 12196-W-24

SET NO: SHEET NO: 51 OF 72

BID PACKAGE - NOT FOR CONSTRUCTION

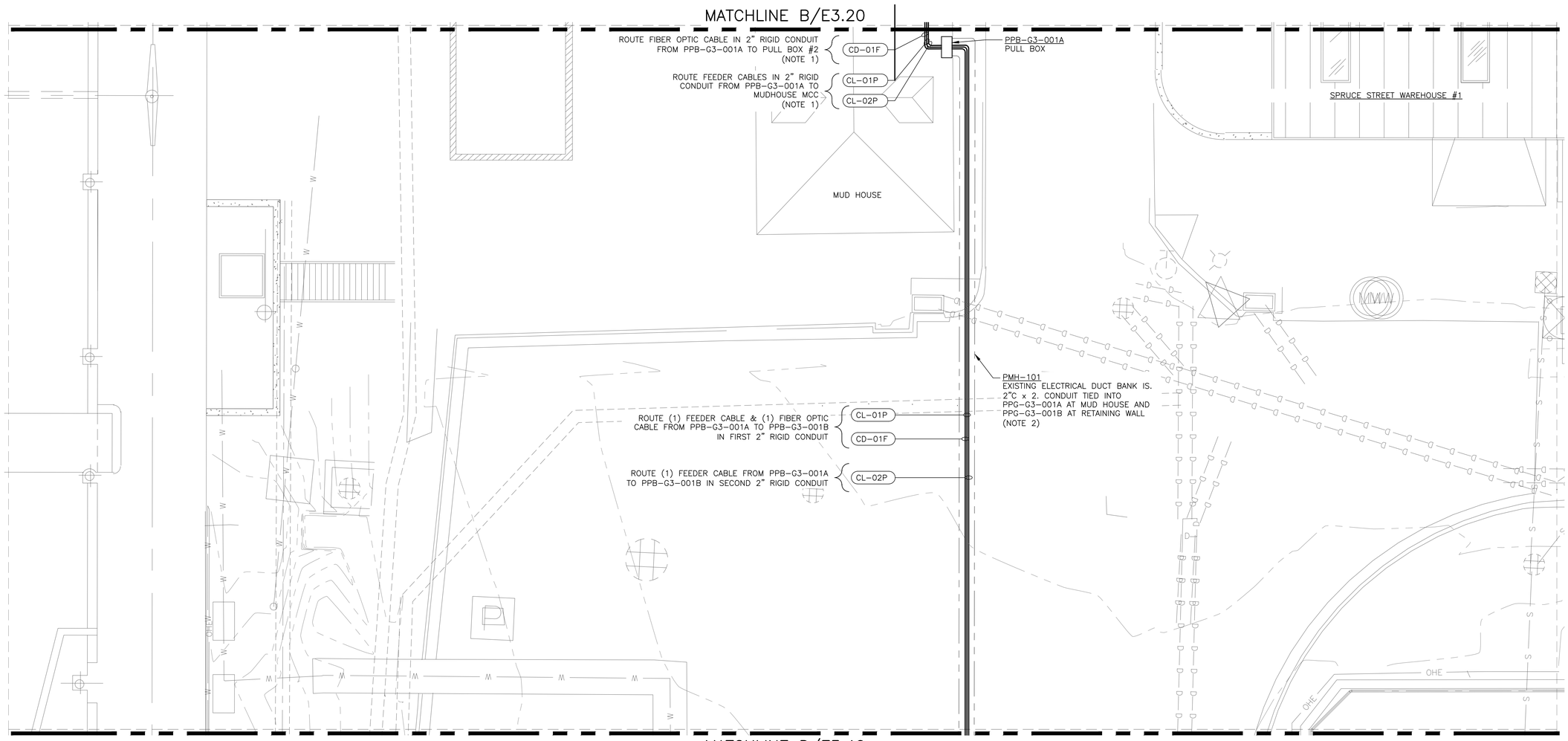

NOTES:
1. RUN OVERHEAD INSIDE BUILDING.
2. EXISTING UNDERGROUND CONCRETE ENCASED DUCT BANK APPROXIMATE LOCATION; CONTRACTOR TO VERIFY LOCATION AND CONDUIT AVAILABILITIES.

ELECTRICAL PLAN 3

SCALE: 1/8" = 1'-0"

0 4' 8' 16'

SCALE: 1/8" = 1'-0"

REV.	DATE	DESCRIPTION	BY
0	03/11/2026	ISSUED FOR BID	JCL

STATE OF LOUISIANA
JOHN C. LAWRENCE
REG. NO. 27941
REGISTERED PROFESSIONAL ENGINEER IN ELECTRICAL ENGINEERING
3-11-2026

WSP USA Inc.
ONE PENN PLAZA, 4TH FLOOR,
NEW YORK, NY 10119
CERTIFICATE OF REGISTRATION # EF.0000620

Infinity Engineering Consultants, LLC
FIRM No LA – EF. 0003709
Civil | Structural | Mechanical | Electrical | Marine | Transportation
Metairie, LA www.infinitieec.com 504-304-0548

DATE	03/11/2026
JOB NO.	22-017
DESIGNED BY:	J. LAWRENCE
FILE NAME:	E3.00 ELECTRICAL KEY PLAN.dwg

SEWERAGE AND WATER BOARD OF NEW ORLEANS

CONTRACT No. 1444

WEST POWER COMPLEX @ CWPT
FUEL OIL DELIVERY SYSTEM

ELECTRICAL

ELECTRICAL PLAN 3

DR.	R. BOUDREAUX
CK:	J. LAWRENCE
AP:	J. LAWRENCE
LAST EDIT:	
SCALE:	AS NOTED
DATE:	03/11/2026

A/E DWG NO. E3.30

DWG. No. 12196-W-24

SET NO: SHEET NO: 52 OF 72

BID PACKAGE - NOT FOR CONSTRUCTION

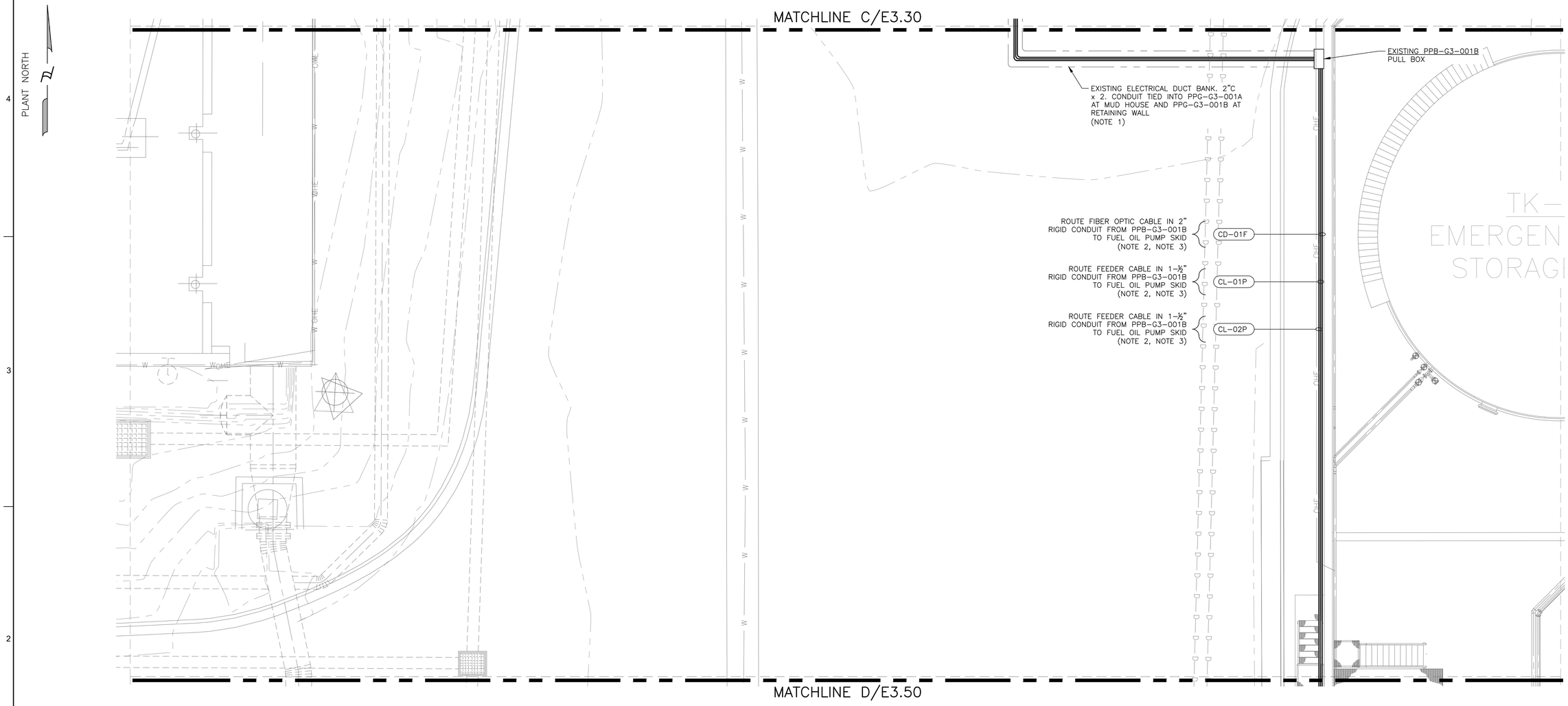

NOTES:

1. EXISTING UNDERGROUND CONCRETE ENCASED DUCT BANK APPROXIMATE LOCATION; CONTRACTOR TO VERIFY LOCATION AND CONDUIT AVAILABILITIES.
2. RUN ON OUTSIDE OF CONTAINMENT WALL.
3. CONDUITS SHALL NOT PENETRATE STORAGE TANK FLOOR INSIDE CONTAINMENT AREA. RUN CONDUITS EXPOSED ALONG CONTAINMENT WALLS.

ELECTRICAL PLAN 4

SCALE: 1/8" = 1'-0"

0 4' 8' 16'

SCALE: 1/8" = 1'-0"

REV.	DATE	DESCRIPTION	BY
0	03/11/2026	ISSUED FOR BID	JCL

STATE OF LOUISIANA
JOHN C. LAWRENCE
REG. NO. 27941
REGISTERED PROFESSIONAL ENGINEER IN ELECTRICAL ENGINEERING
3-11-2026

WSP USA Inc.
ONE PENN PLAZA, 4TH FLOOR,
NEW YORK, NY 10119
CERTIFICATE OF REGISTRATION # EF.2000623

FIRM No: LA – EF. 0003709
Infinity Engineering Consultants, LLC
Civil | Structural | Mechanical | Electrical | Marine | Transportation
Metairie, LA www.infinityec.com 504-304-0548

DATE	03/11/2026	JOB NO.	22-017

DESIGNED BY: J. LAWRENCE
FILE NAME: E3.00 ELECTRICAL KEY PLAN.dwg

SEWERAGE AND WATER BOARD OF NEW ORLEANS

CONTRACT No. 1444

WEST POWER COMPLEX @ CWPT
FUEL OIL DELIVERY SYSTEM

ELECTRICAL

ELECTRICAL PLAN 4

DR:	R. BOUDREAUX
CK:	J. LAWRENCE
AP:	J. LAWRENCE
LAST EDIT:	
SCALE:	AS NOTED
DATE:	03/11/2026

A/E DWG NO.
E3.40

DWG. No. 12196-W-24

SET NO: SHEET NO: 53 OF 72

BID PACKAGE - NOT FOR CONSTRUCTION

MATCHLINE B/E3.40

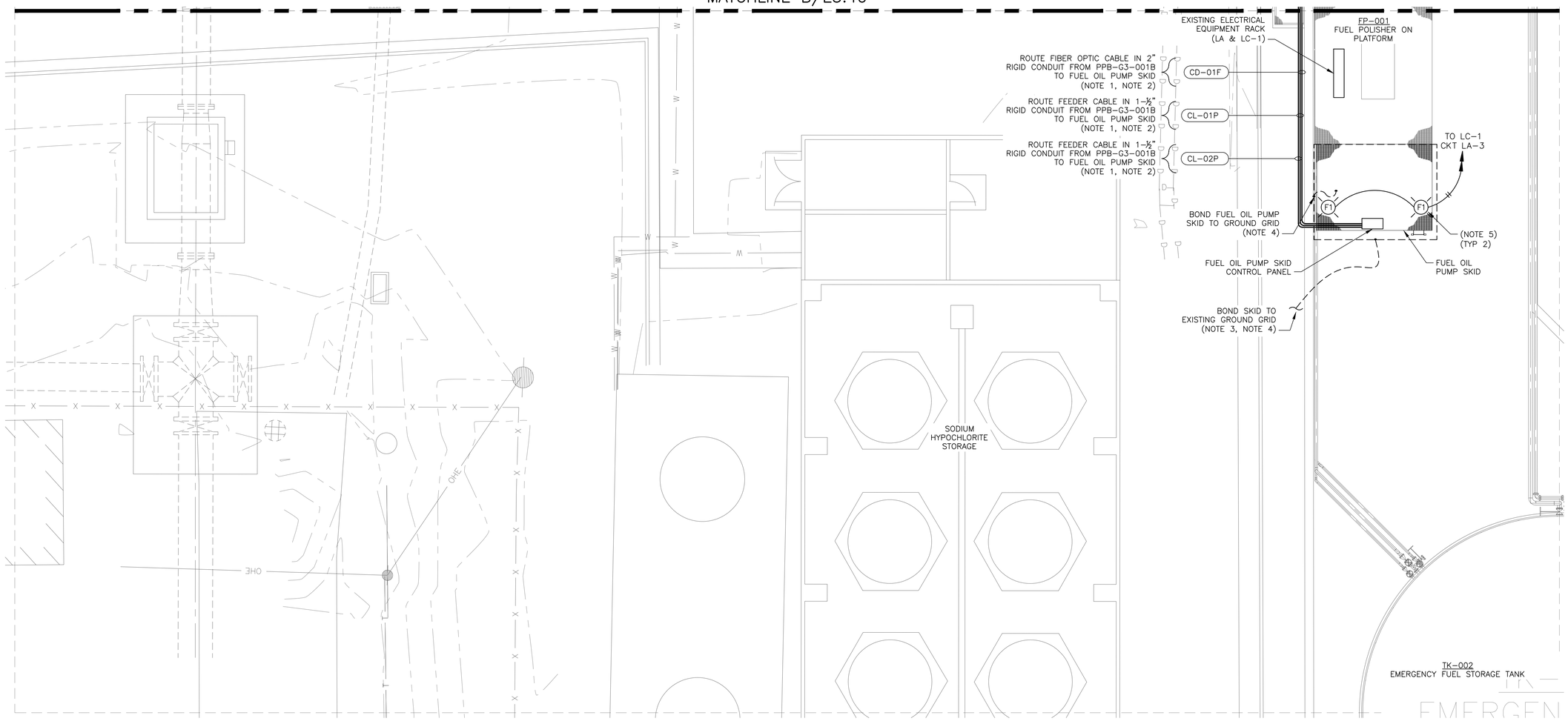

NOTES:

1. RUN ON OUTSIDE OF CONTAINMENT WALL.
2. CONDUITS SHALL NOT PENETRATE STORAGE TANK FLOOR INSIDE CONTAINMENT AREA. RUN CONDUITS EXPOSED ALONG CONTAINMENT WALLS.
3. LOCATE EXISTING GROUND GRID OUTSIDE OF CONTAINMENT PIT, ROUTE 4/0 GROUND AND BOND TO FUEL OIL PUMP SKID.
4. BOND 4/0 GROUND CONDUCTOR TO EXISTING SKID AND ROUTE TO FUEL OIL PIMP SKID.
5. MATCH EXISTING LIGHTING INSTALLATION. CONTRACTOR SHALL TIE INTO EXISTING LIGHTING CIRCUIT.

ELECTRICAL PLAN 5

SCALE: 1/8" = 1'-0"

0 4' 8' 16'

SCALE: 1/8" = 1'-0"

LIGHTING FIXTURE SCHEDULE

TYPE	MANUFACTURER & CATALOG No.	DESCRIPTION	LAMP QTY	TYPE	VOLTS
F1	HAZLUX AH1 LED SERIES #AH1-4-1-K5-R3-1-TG-P-G-U	AREA LIGHT, EPOXY POWDER COATED COPPER FREE ALUMINUM HOUSING, TEMPERED GLASS LENS, CCT=5000k, 6499 LUMENS, POLE MOUNT, WITH SN01 POLE STANCHION MOUNT 10' ALUMINUM SWIVEL POLE CATALOG No. ST7-M2-3000-T-NCT-AL	-	40W LED	120

REV.	DATE	DESCRIPTION	BY
0	03/11/2026	ISSUED FOR BID	JCL

STATE OF LOUISIANA
JOHN C. LAWRENCE
REG. NO. 27941
REGISTERED PROFESSIONAL ENGINEER IN ELECTRICAL ENGINEERING
3-11-2026

WSP USA INC.
ONE PENN PLAZA, 11TH FLOOR, NEW YORK, NY 10119
CERTIFICATE OF REGISTRATION # EF.0000623

Infinity Engineering Consultants, LLC
FIRM No LA – EF. 0003709
Civil | Structural | Mechanical | Electrical | Marine | Transportation
Metairie, LA www.infinityec.com 504-304-0548

DATE	03/11/2026	JOB NO.	22-017

DESIGNED BY: J. LAWRENCE
FILE NAME: E3.00 ELECTRICAL KEY PLAN.dwg

SEWERAGE AND WATER BOARD OF NEW ORLEANS

CONTRACT No. 1444

WEST POWER COMPLEX @ CWPT
FUEL OIL DELIVERY SYSTEM

ELECTRICAL

ELECTRICAL PLAN 5

DR:	R. BOUDREAUX
CK:	J. LAWRENCE
AP:	J. LAWRENCE
LAST EDIT:	
SCALE:	AS NOTED
DATE:	03/11/2026

A/E DWG NO. E3.50

DWG. No. 12196-W-24

SET NO: SHEET NO: 54 OF 72

BID PACKAGE - NOT FOR CONSTRUCTION

SPECIFIC NOTES:

1. ALL CONDUIT AND WIRE TO BE INSTALLED AS NEW UNDER THIS CONTRACT.
2. TERMINATE CABLE WITH MANUFACTURES TERMINATION KITS PER MANUFACTURERS INSTRUCTIONS.
3. CONDUIT SIZE VARIES. SEE PLANS.

CONDUIT / CABLE SCHEDULE

CABLE		CONDUIT		FUNCTION	FROM	TO	ROUTE	REMARKS
TAG No.	CONDUCTORS	TAG No.	SIZE					
CL-01P	3-1/C#6, 1-1/C#8(G)	CL-01P	(NOTE 3)	480V POWER	MUD HOUSE MCC-G3	FUEL OIL PUMP A	UNDERGROUND & EXPOSED	-
CL-02P	3-1/C#6, 1-1/C#8(G)	CL-02P	(NOTE 3)	480V POWER	MUD HOUSE MCC-G4	FUEL OIL PUMP B	UNDERGROUND & EXPOSED	-
CD-01F	1-6 STRAND FIBER OPTIC CABLE 8.9 MICRON	CD-01F	(NOTE 3)	COMMUNICATION / CONTROL	CHEMICAL BUILDING	FUEL OIL SKID	UNDERGROUND & EXPOSED	-

REV.	DATE	DESCRIPTION	BY
0	03/11/2026	ISSUED FOR BID	JCL

STATE OF LOUISIANA
JOHN C. LAWRENCE
REG. NO. 27941
REGISTERED PROFESSIONAL ENGINEER IN ELECTRICAL ENGINEERING
3-11-2026

WSP USA Inc.
ONE PENN PLAZA, 4TH FLOOR,
NEW YORK, NY 10119
CERTIFICATE OF REGISTRATION # EF.2000023

FIRM No: LA – EF. 0003709
Infinity Engineering Consultants, LLC
Civil | Structural | Mechanical | Electrical | Marine | Transportation
Metairie, LA www.infinityec.com 504.304.0548

SEWERAGE AND WATER BOARD OF NEW ORLEANS

CONTRACT No. 1444

WEST POWER COMPLEX @ CWPT
FUEL OIL DELIVERY SYSTEM

ELECTRICAL

CONDUIT-CABLE SCHEDULE

DR:	R. BOUDREAUX
CK:	J. LAWRENCE
AP:	J. LAWRENCE
LAST EDIT:	
SCALE:	AS NOTED
DATE:	03/11/2026

A/E DWG NO. E6.00

DWG. No. 12196-W-24

SET NO: SHEET NO: 55 OF 72

DATE	03/11/2026	JOB NO.	22-017

DESIGNED BY: J. LAWRENCE

FILE NAME: E6.00 CONDUIT-CABLE SCHEDULE.dwg

BID PACKAGE - NOT FOR CONSTRUCTION

VALVE SYMBOLS

- GATE VALVE
- BALL VALVE
- GLOBE VALVE
- PLUG VALVE
- CHECK VALVE
- STOP CHECK VALVE
- NEEDLE VALVE
- BUTTERFLY VALVE
- ANGLE VALVE
- 3 WAY VALVE
- 4 WAY VALVE
- RELIEF VALVE
- DUMP VALVE
- GAUGE GLASS VALVE
- AST OVERFILL VALVE PROTECTION VALVE
- SELF CONTAINED PRESSURE CONTROL VALVE
- AR — AIR RELEASE VALVE
- BACKFLOW PREVENTER
- F — FOOT VALVE
- V — VACUUM BREAKER

VALVE ACTUATOR SYMBOLS

- PISTON OPERATED
- M — MOTOR OPERATED
- AIR OPERATED DIAPHRAM
- S — SOLENOID
- EP — ELECTROPNEUMATIC POSITIONER

PUMP/FAN SYMBOLS

- PUMP (CENTRIFUGAL)
- PUMP - ROTARY/PD
- FAN
- CHEMICAL METERING PUMP
- VFD — VARIABLE FREQUENCY DRIVE

PIPING SYMBOLS

- BREAK FLANGES
- UNION
- CHANGE IN PIPE SIZE (ECCENTRIC)
- CHANGE IN PIPE SIZE (CONCENTRIC)
- SCREWED CAP
- BUTTWELD CAP
- BLIND FLANGE
- MALE CAM LOCK FITTING
- HOSE CONNECTION
- STRIKER PLATE
- SPECTACLE BLIND
- # — VENDOR NOZZLE/CONNECTION NUMBER

INSTRUMENTATION SYMBOLS

- ANNUBAR FLOW ELEMENT
- CLAMP-ON ULTRASONIC FLOW METER
- C — CORIOLIS FLOW ELEMENT
- ORIFICE METER/RESTRICTION ORIFICE
- M — MAGNETIC FLOWMETER
- SG — SIGHT GLASS FLOW INDICATOR
- ROTOMETER
- T — TURBINE FLOWMETER
- VORTEX FLOWMETER
- VENTURI NOZZLE
- THERMOWELL
- PIT — PRESSURE INSTRUMENT WITH ROOT VALVE - REFER TO INSTRUMENT INSTALLATION DETAILS (IC - DRAWINGS) FOR INSTRUMENT VALVE MANIFOLD REQUIREMENTS
- TE — TEMPERATURE ELEMENT WITH THERMOWELL

MISCELLANEOUS INLINE EQUIPMENT

- EXPANSION JOINT
- ROUTE TO NEAREST SANITARY DRAIN INLET
- CP — CONDENSATE POT
- START-UP STRAINER
- INJECTION QUILL
- SPRAY NOZZLE
- STEAM TRAP
- FLEXIBLE HOSE
- MECHANICAL SEAL COOLER
- PIPING/VENT THRU ROOF
- SILENCER
- RELIEF VALVE WITH DRIP PAN ELBOW
- BASKET STRAINER/FILTER
- DUPLEX BASKET STRAINER
- "Y" STRAINER
- SAFETY SHOWER/EYE WASH
- FLAME ARRESTOR
- FLUID HAMMER ARRESTOR
- PLATE/FRAME HEAT EXCHANGER
- DRAIN AFTERCOOLER
- HB — HOSE BIBB
- OVERFLOW VENT

LINE CONTINUATION DESIGNATION

- TO/FROM P999
- HPS FROM STEAM HEADER
- DESCRIPTION
- CONTINUATION DRAWING NUMBER
- A — SAME-SHEET CONTROLS CONTINUATION
- TIE-IN POINT

CONTROLS SYMBOLOGY

- FIELD MOUNTED DISCRETE INSTRUMENT
- LOCAL PANEL MOUNTED INSTRUMENT
- PLANT SCADA SYSTEM (PSS)
- VENDOR-FURNISHED PLC CONTROL
- INTERLOCK
- < — LOW SELECT
- MID — MID SELECT
- > — HIGH SELECT
- Σ — SUM
- 2oo2 — 2 OUT OF 2 VOTE
- 2oo3 — 2 OUT OF 3 VOTE
- Σ/n — AVERAGE
- OR — "OR" SELECT

INSTRUMENT LINE TYPE INDENTIFICATION

- ELECTRICAL SIGNAL
- PNEUMATIC SIGNAL
- CAPILLARY TUBING
- HYDRAULIC
- COMMUNICATIONS LINK / SOFTWARE

INSTRUMENT & CONTROL VALVE TAG NUMBERING

TC - 11050A

- SUFFIX - OPTIONAL
- PROCESS LOOP NUMBER (REFER TO TABLE AT FAR RIGHT)
- FUNCTION (REFER TO TABLE AT FAR RIGHT)

EQUIPMENT ABBREVIATION CODE

ACWP	AUXILIARY COOLING WATER PUMP
AD	AIR DRYER
AS	AIR SEPARATOR
CEMS	CONTINUOUS EMISSIONS MONITORING SYSTEM
CSF	CHEMICAL SHOT FEEDER
CTG	COMBUSTION TURBINE-GENERATOR
CWP	COOLING WATER PUMP
ET	EXPANSION TANK
F	FAN
FGC	FUEL GAS COMPRESSOR
FL	FILTER-SEPARATOR
FOP	FUEL OIL PUMP
HX	HEAT EXCHANGER
IAC	INSTRUMENT AIR COMPRESSOR
MMF	MULTIMEDIA FILER
MWP	MAKE-UP WATER PUMP
P	PUMP (GENERAL)
PCV	PRESSURE CONTROL VALVE
PRV	PRESSURE RELIEF VALVE
RO	REVERSE OSMOSIS
SI	SILENCER
STR	STRAINER
T	TANK

MISCELLANEOUS ABBREVIATIONS

AC	AIR TO CLOSE
AG	ABOVE GROUND
AO	AIR TO OPEN
CBD	CONTINUOUS BLOWDOWN
DE	DE-ENERGIZED
ELEV	ELEVATION
ESD	EMERGENCY SHUTDOWN
FC	FAIL CLOSED
FIP	FAIL IN PLACE
FRP	FIBER REINFORCED PLASTIC
FO	FAIL OPEN
FP	FULL PORT
HOA	HAND OFF AUTOMATIC
IBD	INTERMITTENT BLOWDOWN
LC	LOCK CLOSED
LO	LOCK OPEN
LPD	LOW POINT DRAIN
MOR	MAINTENANCE OFF REMOTE
MOV	MOTOR OPERATED VALVE
MW	MANWAY
NC	NORMALLY CLOSED
NO	NORMALLY OPEN
PDCS	POWER DISTRIBUTION CONTROL SYSTEM
PSS	PLANT SCADA SYSTEM
PSD	PROCESS SHUTDOWN
PLC	PROGRAMMABLE LOGIC CONTROLLER
PVC	POLYVINYL CHLORIDE
RTD	RESISTANCE TEMPERATURE DETECTOR
SCR	SELECTIVE CATALYTIC REDUCTION
SP	SET POINT
TCP	TURBINE CONTROL PANEL
TSO	TIGHT SHUT-OFF
UG	UNDERGROUND
(V)	VENDOR-FURNISHED

SYSTEM ABBREVIATION CODE

CF	CHEMICAL FEED
CTG	COMBUSTION TURBINE GENERATOR
CTW	NON-POTABLE CITY WATER
CWR	COOLING WATER RETURN
CWS	COOLING WATER SUPPLY
DW	DEMINERALIZED WATER
DR	DRAINS
FG	FUEL GAS
FOR	FUEL OIL RETURN
FOS	FUEL OIL SUPPLY
GLY	GLYCOL/WATER SOLUTION
HF	HYDRAULIC FLUID
IA	INSTRUMENT AIR
LOS	LUBE OIL SUPPLY
LOR	LUBE OIL RETURN
MUW	MAKEUP WATER
PW	POTABLE WATER
VT	VENTS

AREA CODES

CWPYRD	-	CARROLTON WATER PLANT YARD AREA
WPCAUX	-	WEST POWER COMPLEX AUXILIARY AREA
WPCCUR	-	WEST POWER COMPLEX CENTRAL UTILITY RACK
WPCOPS	-	WEST POWER COMPLEX OPERATIONS CENTER
WPCCTG	-	WEST POWER COMPLEX COMBUSTION TURBINE GEN
WPCSFC	-	WEST POWER COMPLEX STATIC FREQ. CONVERTER

EQUIPMENT NUMBER DESIGNATION

WPCAUX - 0 - FO - P-01

- SEQUENTIAL NUMBER
- EQUIPMENT CODE
- SYSTEM CODE
- UNIT NUMBER
- AREA CODE

INSULATION CLASS

A, B, ETC.		HEAT CONSERVATION, REFER TO INSULATION SPECIFICATIONS
N		NO INSULATION
F		INSULATION & HEAT TRACING FOR FREEZE PROTECTION
G		INSULATION FOR PERSONNEL PROTECTION
H		INSULATION FOR CONDENSATION PROTECTION

PIPING SPECIFICATIONS

AC01	-	CARBON STEEL, CLASS 150, INTERIOR INST & SERVICE AIR
CU01	-	TYPE K COPPER, SOLDER FITTINGS, CLASS 150 FLANGES
HC01	-	CARBON STEEL, CLASS 150, LOW PRESSURE FUEL GAS, ABOVE GROUND NO. 2 FUEL OIL
YHD	-	DOUBLE WALL CONTAINMENT PIPE, UNDERGROUND NO. 2 FUEL OIL
MC23	-	CARBON STEEL, CLASS 150, BELOW 750°F, LP PROCESS DRAINS

LINE NUMBER DESIGNATIONS

WPCCTG - 7 - NG - 8" - 0001 - HC03 - NX"

- INSULATION THICKNESS
- INSULATION CODE
- PIPE MATERIAL CODE
- LINE NUMBER
- SIZE
- SYSTEM CODE
- UNIT NUMBER
- AREA CODE

INSTRUMENT & CONTROL VALVE TAG NUMBERING

WPCCTG - 7 - FG - TT - 101 - A

- SUFFIX LETTER
- SEQUENCE NUMBER
- INSTRUMENT TYPE - FOLLOW ISA-5.1-1984 (R1992)*
- SYSTEM CODE
- UNIT
- AREA

INSTRUMENT/COMPONENT IDENTIFICATION LETTERS PER ISA 5.1

	FIRST LETTER		SUCCEEDING LETTERS		
	MEASURED OR INITIATING VARIABLE	MODIFIER	READ OUT OR PASSIVE FUNCTION	OUTPUT FUNCTION	MODIFIER
A	ANALYSIS		ALARM		
B	BURNER,COMBUSTION		USER'S CHOICE (1)	USER'S CHOICE (1)	USER'S CHOICE (1)
C	CONDUCTIVITY			CONTROL	CLOSED
D	USER'S CHOICE (1)	DIFFERENTIAL			
E	VOLTAGE		SENSOR (PRIMARY ELEMENT)		
F	FLOW RATE	RATIO(FRACTION)			
G	USER'S CHOICE (1)		GLASS, VIEWING DEVICE (3)		
H	HAND				HIGH (4)
I	CURRENT(ELECTRICAL)		INDICATE		
J	POWER	SCAN			
K	TIME, TIME SCHEDULE	TIME RATE OF CHANGE		CONTROL STATION	
L	LEVEL		LIGHT		LOW
M	MOISTURE	MOMENTARY			MIDDLE, INTERMEDIATE
N	USER'S CHOICE (1)		TORQUE	USER'S CHOICE (1)	USER'S CHOICE (1)
O	USER'S CHOICE (1)		ORIFICE RESTRICTION		OPEN
P	PRESSURE, VACUUM		POINT (TEST) CONNECTION		
Q	QUANTITY	INTEGRATE, TOTALIZE			
R	RADIATION		RECORD		
S	SPEED, FREQUENCY	SAFETY (8)		SWITCH	
T	TEMPERATURE			TRANSMIT	
U	MULTIVARIABLE (5)		MULTIFUNCTION (5)	MULTIFUNCTION (5)	MULTIFUNCTION (5)
V	VIBRATION, MECHANICAL ANALYSIS			VALVE, DAMPER, LOUVER	
W	WEIGHT, FORCE		WELL		
X	UNCLASSIFIED (6)	X AXIS	UNCLASSIFIED (6)	UNCLASSIFIED (6)	UNCLASSIFIED (6)
Y	EVENT, STATE OR PRESENCE	Y AXIS		RELAY, COMPUTE, CONVERT (7)	
Z	POSITION, DIMENSION	Z AXIS		DRIVER,ACTUATOR UNCLASSIFIED FINAL CONTROL ELEMENT	

NOTES:

1. "USER'S CHOICE" IS INTENDED TO COVER UNLISTED MEANINGS THAT WILL BE USED REPEATEDLY.
2. MODIFYING LETTERS USED IN COMBINATION WITH A FIRST LETTER REPRESENT A NEW AND SEPARATE MEASURED VARIABLE.
3. APPLIES TO UNCALIBRATED DEVICES SUCH AS SIGHT GLASSES.
4. APPLIES TO VALUE OF MEASURED VARIABLE.
5. NON-SPECIFIC DESIGNATION THAT SHOULD BE USED SPARINGLY. USE COMBINATIONS OF OTHER LETTERS WHERE POSSIBLE.
6. INTENDED FOR UNLISTED MEANINGS USED TO A LIMITED EXTENT.
7. DEFINE FUNCTION NEXT TO SYMBOL ON DRAWING.
8. THE TERM "SAFETY" APPLIES TO PROTECTIVE PRIMARY ELEMENTS AND EMERGENCY PROTECTIVE FINAL CONTROL ELEMENTS ONLY.

TAG NUMBERING

SYSTEM ACRONYM - INSTRUMENT/COMPONENT CODE - IDENTIFICATION NUMBER / ALPHA CHARACTER [HPS-FT-01003A]

SYSTEM ACRONYM: SEE TABLE

INSTRUMENT/COMPONENT CODE: SEE ISA 5.1 TABLE

IDENTIFICATION NUMBER: FIVE (5) DIGIT NUMBER WHERE DIGITS 1, 2, AND 3 ARE THE P&ID NO. AND DIGITS 4 AND 5 ARE SEQUENTIAL NUMBERS. FOLLOW ISA LOOP SCHEME WHEN NUMBERING COMPONENTS. EXAMPLE: HPS-PT-10001A AND & HWS-TT-18001A

ALPHA CHARACTER: USE WHERE MULTIPLE COMPONENTS ARE PERFORMING THE SAME FUNCTION. EXAMPLES ARE REDUNDANT PRESSURE TRANSMITTERS OR DOUBLE ISOLATION VALVES (HPS-PT-01001A & HPS-PT-01001B OR NG-PSV-09008A & NG-PSV-09008B)

REUSE OF DOCUMENTS: THIS DOCUMENT, AND THE IDEAS AND DESIGNS INCORPORATED HEREIN, AS AN INSTRUMENT OF PROFESSIONAL SERVICE, IS THE PROPERTY OF JACOBS AND IS NOT TO BE USED, IN WHOLE OR IN PART, FOR ANY OTHER PROJECT WITHOUT THE WRITTEN AUTHORIZATION OF JACOBS.
© JACOBS 2022. ALL RIGHTS RESERVED.

BID PACKAGE - NOT FOR CONSTRUCTION

REV.	DATE	DESCRIPTION	BY
0	03/06/2026	ISSUED FOR BID	LR

STATE OF LOUISIANA
Lane Richard
License No. 0047786
PROFESSIONAL ENGINEER IN MECHANICAL ENGINEERING

SEWERAGE AND WATER BOARD OF NEW ORLEANS

CONTRACT No. 1444

WEST POWER COMPLEX @ CWTP
FUEL OIL DELIVERY SYSTEM

PROCESS

ABBREVIATIONS, NOTES, AND SYMBOLS

Jacobs

DR.	J.MORGAN
CK:	L.LINDLEY
AP:	L. RICHARD
LAST EDIT:	
SCALE:	
DATE:	03/06/2026
A/E DWG NO.	P001
DWG. No.	12196-W-24
SET NO:	SHEET NO: 56 OF 72

DATE | | JOB NO. | D3483600

DESIGNED BY: L. RICHARD
FILE NAME: P-001.dwg

P-001.dwg
3/8/2026
8:32:50 PM

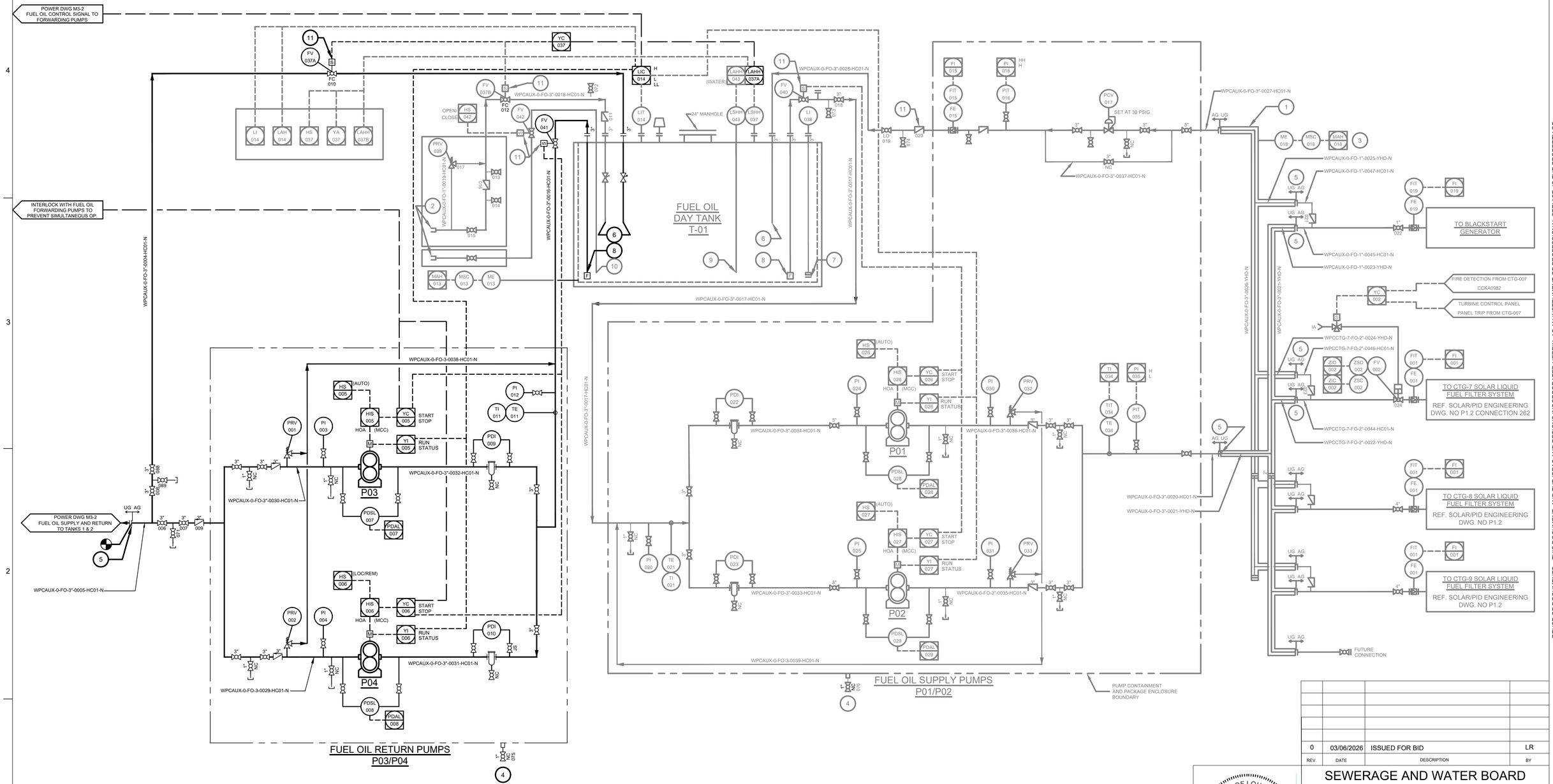

GENERAL NOTES:

A. UNLESS SPECIFICALLY IDENTIFIED, ALL PIPING ON THIS DRAWING IS TO BE FABRICATED INSTALLED AND TESTING ACCORDING TO ASME B31.3.
B. ALL INSTRUMENT AND CONTROL TAGS ARE ASSUMED TO HAVE THE PREFIX "WPCAUX - 0 - FO" FOR "AREA - UNIT - SYSTEM CODE".

KEYED NOTES: (X)

1. DOUBLE WALL CONTAINMENT FOR UNDERGROUND FUEL OIL PIPING WITH LEAK DETECTION SENSING AND ALARM.
2. 3" DRIPLESS CAMLOCK CONNECTION FOR TRUCK PUMP UNLOADING. FITTING AND DOWNSTREAM BALL VALVE TO BE LOCATED IN A SPILL CONTAINMENT BOX.
3. LEAK DETECTION SENSOR FOR DOUBLE WALL CONTAINMENT PIPE TO BE CONNECTED TO EXISTING SENSOR PANEL INSTALLED UNDER CP-1415. SENSOR PANEL WILL BE LOCATED NEAR WEST TRANSITION STRUCTURE.
4. DRAIN VALVES ON SKID CONTAINMENT TO STAY IN CLOSED POSITION UNTIL VISUAL VERIFICATION OF LACK OF PRESENCE OF OIL BEFORE OPENING VALVE.
5. PROVIDE INSULATING FLANGE FOR ABOVEGROUND/UNDERGROUND TRANSITION.
6. EXTEND PIPING TO 24" FROM BOTTOM OF TANK.
7. EXTEND PIPING TO BOTTOM OF TANK.
8. EXTEND PIPING TO 12" ABOVE BOTTOM OF TANK.
9. EXTEND PIPING TO 6" ABOVE BOTTOM OF TANK.
10. EXTEND PIPING TO 3" ABOVE BOTTOM OF TANK.
11. LOCATE VALVE ABOVE ELEVATION OF TANK.

REV.	DATE	DESCRIPTION	BY
0	03/06/2026	ISSUED FOR BID	LR

STATE OF LOUISIANA
Lane Richard
License No. 0047786
PROFESSIONAL ENGINEER IN MECHANICAL ENGINEERING

SEWERAGE AND WATER BOARD OF NEW ORLEANS

CONTRACT No. 1444

WEST POWER COMPLEX @ CWTP
FUEL OIL DELIVERY SYSTEM

PIPING & INSTRUMENTATION DIAGRAM

FUEL OIL

Jacobs

DATE		JOB NO.	D3483600
DESIGNED BY: L. RICHARD			
FILE NAME: P-550.dwg			

DR.	J.MORGAN
CK:	L.LINDLEY
AP:	L. RICHARD
LAST EDIT:	
SCALE:	
DATE:	03/06/2026
A/E DWG NO.	P550
SET NO:	12196-W-24
SHEET NO:	57 OF 72

P-550.dwg
3/8/2026
8:33:17 PM

REUSE OF DOCUMENTS: THIS DOCUMENT, AND THE IDEAS AND DESIGNS INCORPORATED HEREIN, AS AN INSTRUMENT OF PROFESSIONAL SERVICE, IS THE PROPERTY OF JACOBS AND IS NOT TO BE USED, IN WHOLE OR IN PART, FOR ANY OTHER PROJECT WITHOUT THE WRITTEN AUTHORIZATION OF JACOBS.
JACOBS 2022. ALL RIGHTS RESERVED.

BID PACKAGE - NOT FOR CONSTRUCTION

GENERAL

A. SEQUENCES DESCRIBED HEREIN ARE SUPPLEMENTED BY THE PIPING AND INSTRUMENTATION DIAGRAMS. REFER TO ADDITIONAL DRAWINGS FOR SUPPLEMENTAL INFORMATION AND REQUIREMENTS.

B. WHERE DOUBLE WALL TANKS ARE PROVIDED, AN INTERSTITIAL LEVEL SWITCH IS PROVIDED AND ALARM IS INDICATED AT THE PLANT SCADA SYSTEM (PSS).

C. PARALLEL PUMP (LEAD/STANDBY) CONTROL LOGIC: THE PUMP SYSTEMS IN THE WEST POWER COMPLEX (WPC) INCLUDE MULTIPLE PUMPS IN PARALLEL FOR PURPOSES OF REDUNDANCY. FOR THOSE SYSTEMS WHERE AUTOMATED SELECTION AND STARTING OF PUMPS IS NECESSARY, THE FOLLOWING LOGIC GUIDELINES SHALL APPLY.

1. FOR PUMPS WHICH ARE STARTED EITHER AUTOMATICALLY OR MANUALLY/REMOTELY VIA THE PSS, ON A CALL TO START, THE DESIGNATED LEAD PUMP SHALL BE AUTOMATICALLY SELECTED AND STARTED BY THE PSS.
2. PSS SWITCH CONTROLS FOR EACH PARALLEL PUMP SHALL INCLUDE POSITIONS FOR LEAD, STANDBY, AND MAINT HOLD. IF THERE ARE MORE THAN TWO PARALLEL PUMPS PROVIDED FOR THE PARTICULAR PUMP APPLICATION, THE STANDBY POSITION MAY BE EXPANDED TO STANDBY2, ETC.
3. WHEN A PARALLEL PUMP SYSTEM IS COMMANDED TO START FROM THE PSS, THE DESIGNATED LEAD PUMP WILL START. IF THE PUMP IS NOT CONFIRMED RUNNING WITHIN 10 SECONDS (ADJUSTABLE) OF THE COMMAND, THE PUMP WILL BE ASSUMED FAILED. THE PSS LOGIC SHALL REMOVE THE START SIGNAL TO THE MOTOR AND DISPLAY AN ALARM ON THE PSS OPERATOR SCREEN. UPON A FAILURE OF THE LEAD PUMP THE STANDBY PUMP WILL START.
4. WHEN IN MAINTENANCE HOLD, THE INDIVIDUAL PUMP IS STOPPED AND WILL NOT START UNTIL THE OPERATOR PLACES THE PUMP BACK IN LEAD OR STANDBY AND THE HAND SWITCH IS IN REMOTE.
5. EQUALIZATION OF RUN TIME SHALL BE ACHIEVED BY THE PSS THROUGH RUN TIME MONITORING AND CYCLING OF THE LEAD PUMP DESIGNATION. AN OPERATOR-ADJUSTABLE RUN TIME INTERVAL (INITIALLY SET AT 7 DAYS) WILL BE PROGRAMMED INTO THE PSS. WHEN AN OPERATING PUMP REACHES THIS INTERVAL, THE OFFLINE PUMP WITH THE LEAST RUN TIME WILL BE AUTOMATICALLY DESIGNATED AS LEAD PUMP. THE OPERATOR WILL BE NOTIFIED THAT THE LEAD PUMP DESIGNATION WILL CHANGE 2 HOURS PRIOR TO SWITCHING. ACTUAL PUMP OPERATION WILL NOT CHANGE UNTIL THE NEXT START COMMAND IS ISSUED. THIS CYCLING OPERATION WILL CONTINUE AS LONG AS THE PUMPING SYSTEM IS ACTIVE. THE INITIAL RUN TIME INTERVAL PROGRAMMING WILL REQUIRE STAGGERING TO PREVENT STOPPING OF MULTIPLE SYSTEMS AT THE END OF THE FIRST INTERVAL.
6. PUMP RUNTIMES WILL BE DISPLAYED AT THE PSS. OPERATORS WILL BE REQUIRED TO MONITOR THE ACCUMULATED RUNTIMES OF THE PUMPS AND ENSURE THAT OPERATION OF THE PUMPS IS ROTATED ACCORDINGLY. AT ANY TIME, THE OPERATOR MAY OVERRIDE THE PSS'S DESIGNATION OF THE LEAD PUMP AND MANUALLY SELECT A DIFFERENT PUMP IF SO DESIRED. THE REMAINING PUMP(S) WHICH ARE NOT IN MAINTENANCE HOLD STATUS WILL BE AUTOMATICALLY SWITCHED TO STANDBY DESIGNATION.
7. THE PSS SHALL INDICATE AND DISPLAY EACH REMOTELY OPERABLE PUMP CONTROL AND THE STATUS OF THOSE CONTROLS.
8. ALL PUMPS MUST INCLUDE HAND/OFF/AUTO FUNCTIONALITY SO THAT THE SYSTEMS CAN BE RUN BY A LOCAL OPERATOR IN THE EVENT OF A CONTROL SYSTEM FAILURE.

FUEL GAS (NATURAL GAS)

A. OPERATING SEQUENCE DESCRIPTION:

1. FUEL GAS (NATURAL GAS) IS SUPPLIED TO THE CARROLLTON WATER PLANT VIA A DEDICATED HIGH PRESSURE NATURAL GAS SUPPLY LINE OPERATING AT APPROXIMATELY 180 PSIG FROM ENTERGY. FUEL GAS IS CURRENTLY UTILIZED BY EXISTING COMBUSTION TURBINES ON SITE. A NEW BRANCH DOWNSTREAM OF THE ENTERGY REGULATING STATION WILL SUPPLY FUEL GAS TO THE WEST POWER COMPLEX VIA THE UTILITY RACK.
2. CTG-07 FUEL GAS SUPPLY
   a. CTG-07 REQUIRES THE FUEL GAS PRESSURE TO BE INCREASED FROM A MINIMUM OF 160 PSIG AT THE FUEL GAS COMPRESSOR INLET POINT, MEASURED BY WPCCTG-7-NG-PIT-001 TO 440 PSIG AT THE DISCHARGE OF THE FUEL GAS COMPRESSOR.
   b. THE GAS SUPPLY TO THE SITE WILL BE SUFFICIENT TO SUPPORT A FUTURE WEST POWER COMPLEX BUILDOUT INCLUDING CTG-08 AND CTG-09. INCOMING GAS PRESSURE IS MONITORED VIA WPCAUX-0-NG-PIT-001 AND INCOMING GAS FLOW TO THE WEST POWER COMPLEX IS MEASURED BY WPCAUX-0-NG- FE-001.
   c. CTG-07 INCLUDES AN AUTOMATIC TRANSFER CAPABILITY FROM FUEL GAS TO FUEL OIL UPON A LOSS OF LINE PRESSURE IN THE NATURAL GAS SUPPLY HEADER. THIS TRANSFER FUNCTION WILL UTILIZE WPCAUX-0-NG-PIT-001 FOR THE REQUIRED GAS PRESSURE MEASUREMENT.
   d. THE FUEL GAS COMPRESSOR AND FUEL GAS CONDITIONING EQUIPMENT IS PROVIDED BY SOLAR TURBINES UNDER THE CP-1438. REFER TO ENERPROJECT AND SOLAR DOCUMENTATION FOR FURTHER INFORMATION.
   e. FUEL CUTOFF ON CONFIRMED FIRE SIGNAL:
      UPON CONFIRMATION OF FIRE SIGNAL FROM THE CTG-007 FIRE ALARM PANEL (SIGNAL WPCCTG-7-FIRE PANEL) OR TRIP SIGNAL FROM THE TURBINE CONTROL PANEL, CLOSE FUEL GAS VALVE WPCCTG-7-FG-FV-022).

FUEL OIL

A. OPERATING SEQUENCE DESCRIPTION:

1. FUEL OIL SYSTEM
   a. THE FUEL OIL DAY TANK (T-01) WILL BE ABLE TO BE FILLED FROM THE MAIN FUEL TANK FARM VIA THE FUEL OIL FORWARDING PUMPS (00-FO-PMP-001A/B SHOWN ON POWER ENGINEERS DRAWING 12182-W2S M3-2). THESE PUMPS WILL FEED A BIDIRECTIONAL PIPE AND THE MANUAL VALVES AT THE PUMP SKID AND AT THE FUEL OIL DAY TANK AT THE WEST POWER COMPLEX MUST BE PROPERLY SET FOR FILLING OF THE TANK. TO PROTECT THE TANK FROM OVERFILLING, A HIGH LEVEL SWITCH LSHH-037 WILL CAUSE THE INLET VALVE FV-037A TO CLOSE, AND WILL ALSO CAUSE THE FUEL OIL FORWARDING PUMPS TO SHUT DOWN. ADDITIONALLY, AN AST OVERFILL PROTECTION VALVE IN THE FILL LINE INSIDE THE TANK WILL PREVENT OVERFILLING OF THE FUEL OIL TANK.
   b. A TRUCK UNLOADING STATION USING A PUMP ON THE TRUCK IS USED TO TRANSPORT FUEL TO THE TANK. AN AST OVERFILL PROTECTION VALVE IN THE FILL LINE INSIDE THE TANK WILL PREVENT OVERFILLING OF THE FUEL OIL TANK. HIGH LEVEL SWITCH (LSHH-037) WILL CLOSE A SOLENOID-OPERATED VALVE (FV-037B) IN THE FILL LINE AND SHOW AN ALARM AT THE TRUCK UNLOADING STATION TO PREVENT OVERFILLING THE FUEL OIL TANK.
   c. FUEL OIL SUPPLY TO THE WEST POWER COMPLEX IS FED FROM THE FUEL OIL SUPPLY PUMPS (WPCAUX-0-FO-P01/P02). THE FUEL OIL WILL BE SUPPLIED TO THE FUEL OIL SUPPLY HEADER, AND THE BACKPRESSURE REGULATOR (PCV-017) WILL MAINTAIN SYSTEM PRESSURE AT 30 PSIG. AUTOMATED VALVES ON THE SOLAR TURBINE LIQUID FUEL SKID WILL OPEN TO ALLOW FUEL TO THE COMBUSTION TURBINE. THERE IS ALSO AN AUTOMATED PRESSURE SWITCH ON THE NATURAL GAS LINE THAT ALLOWS THE COMBUSTION TURBINE TO SWITCH FROM FUEL OIL TO FUEL GAS IN THE EVENT OF A LOSS OF GAS PRESSURE. REFER TO THE VENDOR DOCUMENTATION FOR DETAILS. THERE WILL BE A PERMISSIVE ON THE PUMPS TO PREVENT THE PUMPS FROM STARTING WHEN TANK LEVEL IS LOW, AS IDENTIFIED BY LIC-014.
   d. FUEL OIL WILL BE ABLE TO BE RETURNED TO THE MAIN FUEL TANK FARM UTILIZING THE FUEL OIL RETURN PUMPS (WPCAUX-0-FO-P03/P04). THESE PUMPS FEED THE BIDIRECTIONAL LINE AND THE VALVES AT THE WEST POWER COMPLEX FUEL SKID AND AT THE MAIN TANK FARM WILL REQUIRED TO BE MANUALLY SET IN THE APPROPRIATE POSITIONS TO ALLOW FOR FUEL TRANSFER BACK TO THE MAIN TANKS. FUEL TRANSFER TO THE MAIN TANK FARM WILL BE REQUIRED WHEN THE LIQUID FUEL USAGE AT THE WEST POWER COMPLEX IS LOW AND THE FUEL REQUIRES FILTRATION AND POLISHING. THERE WILL BE AN INTERLOCK BETWEEN THESE PUMPS AND THE FUEL OIL FORWARDING PUMPS AT THE MAIN TANK FARM TO PREVENT SIMULTANEOUS OPERATION OF BOTH SETS OF PUMPS.THERE WILL BE A PERMISSIVE ON THE PUMPS TO PREVENT THE PUMPS FROM STARTING WHEN TANK LEVEL IS LOW, AS IDENTIFIED BY LIC-014.
   e. THE FUEL OIL DAY TANK (T-01) IS A UL-142 DOUBLE WALL TANK. IT WILL HAVE AN INTERSTITIAL MONITOR WITH A MOISTURE SENSOR WHICH WILL SEND AN ALARM TO THE PSS IN THE EVENT OF A LEAK IN THE INTERNAL WALL.
   f. THE UNDERGROUND FUEL OIL PIPING IS DOUBLE WALL PIPING, WITH MOISTURE SENSORS IN THE CONTAINMENT PIPE. THE PIPING SENSORS WILL CONNECT TO A MASTER CONTROL PANEL IN THE WEST POWER COMPLEX. THE MASTER CONTROL PANEL WILL SEND AN ALARM TO THE PSS IN THE EVENT OF AN OIL LEAK. THE UNDERGROUND PIPING TO BE INSTALLED IN OTHER PACKAGES (CP-1415, CP-1420) WILL ALSO CONNECT TO THIS MASTER CONTROL PANEL, FOR AN INTEGRATED SYSTEM.
   g. FUEL CUTOFF ON CONFIRMED FIRE SIGNAL:
      UPON CONFIRMATION OF FIRE SIGNAL FROM THE CTG-007 FIRE ALARM PANEL (SIGNAL WPCCTG-7-FIRE PANEL) OR TRIP SIGNAL FROM THE TURBINE CONTROL PANEL, CLOSE FUEL OIL VALVE WPCCTG-7-FO-FV-002).

SERVICE AND INSTRUMENT AIR

A. OPERATING SEQUENCE DESCRIPTION:

1. THE SERVICE & INSTRUMENT AIR SYSTEM PROVIDES COMPRESSED AIR AT 100-125 PSIG FOR VARIOUS USES IN THE PLANT, INCLUDING:
   a. PNEUMATIC CONTROL VALVE ACTUATORS
   b. COMBUSTION TURBINE STARTING AIR
   c. AIR FOR CEMS CABINET
   d. AIR FOR STACK FLOW MONITORS
   e. SERVICE AIR DROPS LOCATED THROUGHOUT THE PLANT
2. THE SERVICE & INSTRUMENT AIR SYSTEM INCLUDES AIR COMPRESSORS, COALESCING FILTERS, DESICCANT DRYERS, AFTER FILTERS, RECEIVER, AND THE AIR DISTRIBUTION SYSTEM.
3. THE SERVICE & INSTRUMENT AIR PACKAGE IS DIRECTLY CONTROLLED BY A VENDOR-FURNISHED LOCAL PROGRAMMABLE LOGIC CONTROLLER (PLC), WITH OVERALL ENABLING AND STATUS MONITORING FROM THE PSS VIA MODBUS TCP/IP.
4. THE DESICCANT DRYERS HAVE A LOCAL CONTROLLER WITH ENABLING AND STATUS MONITORING FROM THE PSS VIA HARDWIRED SIGNALS.
5. THE AIR COMPRESSORS ARE STAGED TO PROVIDE A CONSTANT PRESSURE OF 145 PSIG AT THE AIR RECEIVER. THE DESICCANT DRYERS REDUCE THE MOISTURE IN THE AIR TO LESS THAN -40°F DEWPOINT.
6. AIR COMPRESSOR PACKAGE:
   a. REFER TO THE MECHANICAL SCHEDULES FOR INFORMATION REGARDING THE COMPRESSED AIR SYSTEM CAPACITY.
   b. THE PSS WILL SEND AN ENABLE SIGNAL TO EACH AIR COMPRESSOR THAT WILL ALLOW THE LOCAL CONTROLLER TO CONTROL THE STARTUP OF THE AIR COMPRESSOR. THE RUN STATUS WILL BE DISPLAYED AT THE PSS. COMPRESSOR WARNING FAULT AND GENERAL FAULT STATUS WILL BE DISPLAYED ON THE PSS . THE LOCAL CONTROLLER INCLUDES A MODBUS TCP/IP COMMUNICATION LINK BACK TO THE PSS TO ALLOW FOR REMOTE CONTROL AND MONITORING AS WELL.
   c. THE PSS CAN ALSO SET EACH COMPRESSOR TO ADJUST TO LOAD EITHER BY VFD OR FIXED SPEED.
   d. THE COMPRESSORS WILL BE STAGED ON TO MAINTAIN A SUFFICIENT PRESSURE IN THE RECEIVER TANK. THE PRESSURE SET POINT AND DEAD BAND FOR STAGING A SECOND COMPRESSOR WILL BE ADJUSTABLE. A TIMER WILL INHIBIT THE RESTARTING OF A COMPRESSOR TO PREVENT THE COMPRESSORS FROM CYCLING.
   e. THE AIR COMPRESSOR DISCHARGE AIR HEADER PRESSURE IS MONITORED AND ALARMED AT THE PSS VIA PIT DOWNSTREAM OF THE AIR RECEIVER.
   f. IF A COMPRESSOR FAILS, IT IS ALARMED AT THE PSS. A FAILED COMPRESSOR MUST BE RESET FROM THE PSS AS WELL AS AT THE COMPRESSOR LOCAL PLC. AFTER BEING RESET, THE FAILED COMPRESSOR WILL RESUME OPERATION IF IT IS REQUIRED TO MEET PRESSURE SET POINT.
   g. COMPRESSOR STAGING WILL AUTOMATICALLY ADJUST TO EQUALIZE RUN TIME BETWEEN COMPRESSORS.
   h. FOR STARTUP OF THE CTG'S, THE FLOW RATE REQUIRES TWO COMPRESSORS TO BE RUNNING. WHEN THE FUTURE CTG'S ARE ADDED, ONLY ONE CTG CAN BE STARTED UP AT A TIME.
7. COALESCING FILTERS:
   a. DIFFERENTIAL PRESSURE IS MONITORED AND ALARMED ACROSS THE COALESCING FILTERS VIA PSS.
   b. THE COALESCING FILTER DISCHARGE AIR HEADER PRESSURE IS INDICATED LOCALLY BY PRESSURE GAUGE.
8. DESICCANT DRYERS:
   a. THE DESICCANT DRYERS WILL HAVE A LOCAL CONTROL PANEL THAT WILL SEQUENCE THE DRYERS BETWEEN ACTIVE AND REGENERATION STAGE. THE DRYER CONTROL PANEL WILL RECEIVE AN ENABLE SIGNAL FROM THE PSS THAT WILL ALLOW THE DRYERS TO FUNCTION. THE DRYERS WILL NORMALLY BE ENABLED, BUT THE OPERATOR WILL BE ALLOWED TO TAKE THE DESICCANT DRYERS OFF LINE FOR MAINTENANCE.
   b. THE DRYER LOCAL CONTROL PANEL WILL BE INTEGRATED INTO THE OVERALL INSTRUMENT AI COMPRESSOR CONTROL SYSTEM AND COMMUNICATE TO THE PSS VIA MODBUS TCP/IP.
   c. THE DRYER DISCHARGE AIR HEADER DEW POINT TEMPERATURE IS MONITORED AND ALARMED.
   d. THE DRYER DISCHARGE AIR HEADER PRESSURE IS MONITORED AND ALARMED AT THE PSS VIA PI.
9. AFTER FILTER:
   a. DIFFERENTIAL PRESSURE IS MONITORED AND ALARMED ACROSS THE AFTER FILTERS BY A PRESSURE DIFFERENTIAL SWITCH.
   b. THE AFTER FILTER DISCHARGE AIR HEADER PRESSURE IS INDICATED LOCALLY BY PRESSURE GAUGE.
10. RECEIVER:
    a. AIR RECEIVER PRESSURE AND TEMPERATURE ARE INDICATED LOCALLY ON THE RECEIVER VESSEL BY GAUGES.
11. DISTRIBUTION SYSTEM:
    a. A SELF-CONTAINED PRESSURE REGULATING VALVE PCV PROVIDES PRESSURE CONTROL FOR THE PLANT AIR DISTRIBUTION SYSTEM.
12. INSTRUMENT AIR DISTRIBUTION PRESSURE IS MEASURED VIA WPC-AUX-0-PI-001 (BETWEEN CTG-07 AND FUTURE CTG-08) AND THE SKID MOUNTED PI AFTER THE AIR RECEIVER ON THE AIR COMPRESSOR SKID. PRESSURES ARE INDICATED AND ALARMED AT THE PSS.

CONTINUOUS EMISSIONS MONITORING

A. OPERATING SEQUENCE DESCRIPTION:

1. THE FUNCTION OF THE CONTINUOUS EMISSIONS MONITORING SYSTEM (CEMS) IS TO CONTINUOUSLY MONITOR VARIOUS EMISSIONS CONSTITUENTS IN THE FLUE GAS OF CTG-07. THE CEMS ALSO FUNCTIONS TO AUTOMATICALLY GENERATE REPORTS FOR RECORD OF PLANT EMISSIONS. MEASURED PARAMETERS INCLUDE:
   a. TURBINE EXHAUST PARAMETERS:
      1) CARBON MONOXIDE (CO)
      2) NITROGEN OXIDE COMPOUNDS (NOX)
2. THE CEMS IS DIRECTLY CONTROLLED BY A PLC FURNISHED BY THE MANUFACTURER. KEY MONITORING AND CONTROL DATA AS WELL AS ALARMS AND STATUS INFORMATION ARE COMMUNICATED TO THE PSS VIA MODBUS TCP/IP COMMUNICATION LINK AS WELL AS HARD-WIRED I/O. REFER TO VENDOR DOCUMENTATION FOR FURTHER DETAILS REGARDING THE CEMS CONTROLLER AND ASSOCIATED FUNCTIONS.
3. THE CONTINUOUS EMISSIONS MONITORING SYSTEM (CEMS) INCLUDES THE FOLLOWING EXHAUST GAS MEASUREMENT DATA TO THE PSS VIA MODBUS TCP/IP:
   a. TURBINE EXHAUST CO
   b. TURBINE EXHAUST NOX
   c. TURBINE EXHAUST STACK FLOW
4. THE FOLLOWING STATUS INFORMATION IS PROVIDED TO THE PSS VIA MODBUS TCP/IP:
   a. OUTLET ANALYZER IN SERVICE
   b. OUTLET IN CALIBRATION
   c. CEMS COMMON ALARM
   d. CEMS CABINET TEMPERATURE ALARM
   e. CEMS INSTRUMENT AIR ALARM
   f. CEMS CONTROLLER ALARM
   g. CEMS POWER LOSS ALARM
5. THE PSS PROVIDES THE FOLLOWING PROCESS STATUS AND COMMANDS TO THE CEMS SYSTEM:
   a. TOTAL FUEL CONSUMPTION OF CTG-07 (FUEL GAS AND FUEL OIL)
   b. CTG-07 TOTAL MEGAWATT LOAD
   c. CTG-07 STACK TEMPERATURE
   d. CTG-07 ONLINE
   e. REMOTE CALIBRATION START
   f. CEMS SAMPLE VALID

DRAIN SYSTEM

A. OPERATING SEQUENCE DESCRIPTION:

1. THE DRAINS FROM THE COMBUSTION TURBINE SKID WILL COLLECT IN THE CTG-7 OILY DRAINS TANK, ADJACENT TO CTG7. THIS OILY DRAINS TANK WILL BE PROVIDED WITH A DUPLEX SUMP PUMP SKID AND WILL BE CONTROLLED BY LEVEL SWITCHES IN THE TANK (LSLL-XXX, LSL-XXX, LSH-XXX, LSHH-XXX). THE PUMP SKID WILL HAVE ITS OWN PLC CONTROLLER TO INITIATE STARTING AND STOPPING OF THE PUMPS BASED ON THE LEVEL SWITCHES. THE LOCAL CONTROLLER ON THE SUMP WILL SEND A PUMP RUN STATUS SIGNAL AND A GENERAL ALARM TO THE PSS.
2. THE SUMP PUMPS WILL SEND THE DRAINS TO THE WEST POWER COMPLEX OIL/WATER SEPARATOR, WHICH WILL BE INSTALLED IN A LATER PACKAGE. UNTIL THE OIL/WATER SEPARATOR IS INSTALLED, THE SUMP PUMPS WILL PUMP THE DRAINS TO THE TEMPORARY STORAGE TANK T-04. A LEVEL SWITCH LSH-002 WILL ALARM UPON HIGH LEVEL IN THE TEMPORARY STORAGE TANK. IT WILL REQUIRE TRUCK UNLOADING.

REV.	DATE	DESCRIPTION	BY
0	03/06/2026	ISSUED FOR BID	LR

STATE OF LOUISIANA
Lane Richard
License No. 0047786
PROFESSIONAL ENGINEER IN MECHANICAL ENGINEERING

SEWERAGE AND WATER BOARD OF NEW ORLEANS

CONTRACT No. 1444

WEST POWER COMPLEX @ CWTP
FUEL OIL DELIVERY SYSTEM

PROCESS

SEQUENCE OF OPERATIONS

Jacobs

DATE		JOB NO.	D3483600

DESIGNED BY: L. RICHARD
FILE NAME: P-080.dwg

DR.	J.MORGAN
CK:	L.LINDLEY
AP:	L. RICHARD
LAST EDIT:	
SCALE:	
DATE:	03/06/2026

A/E DWG NO. P080

DWG. No. 12196-W-24

SET NO: SHEET NO: 58 OF 72

BID PACKAGE - NOT FOR CONSTRUCTION
REUSE OF DOCUMENTS: THIS DOCUMENT, AND THE IDEAS AND DESIGNS INCORPORATED HEREIN, AS AN INSTRUMENT OF PROFESSIONAL SERVICE, IS THE PROPERTY OF JACOBS AND IS NOT TO BE USED, IN WHOLE OR IN PART, FOR ANY OTHER PROJECT WITHOUT THE WRITTEN AUTHORIZATION OF JACOBS. © JACOBS 2022 ALL RIGHTS RESERVED.

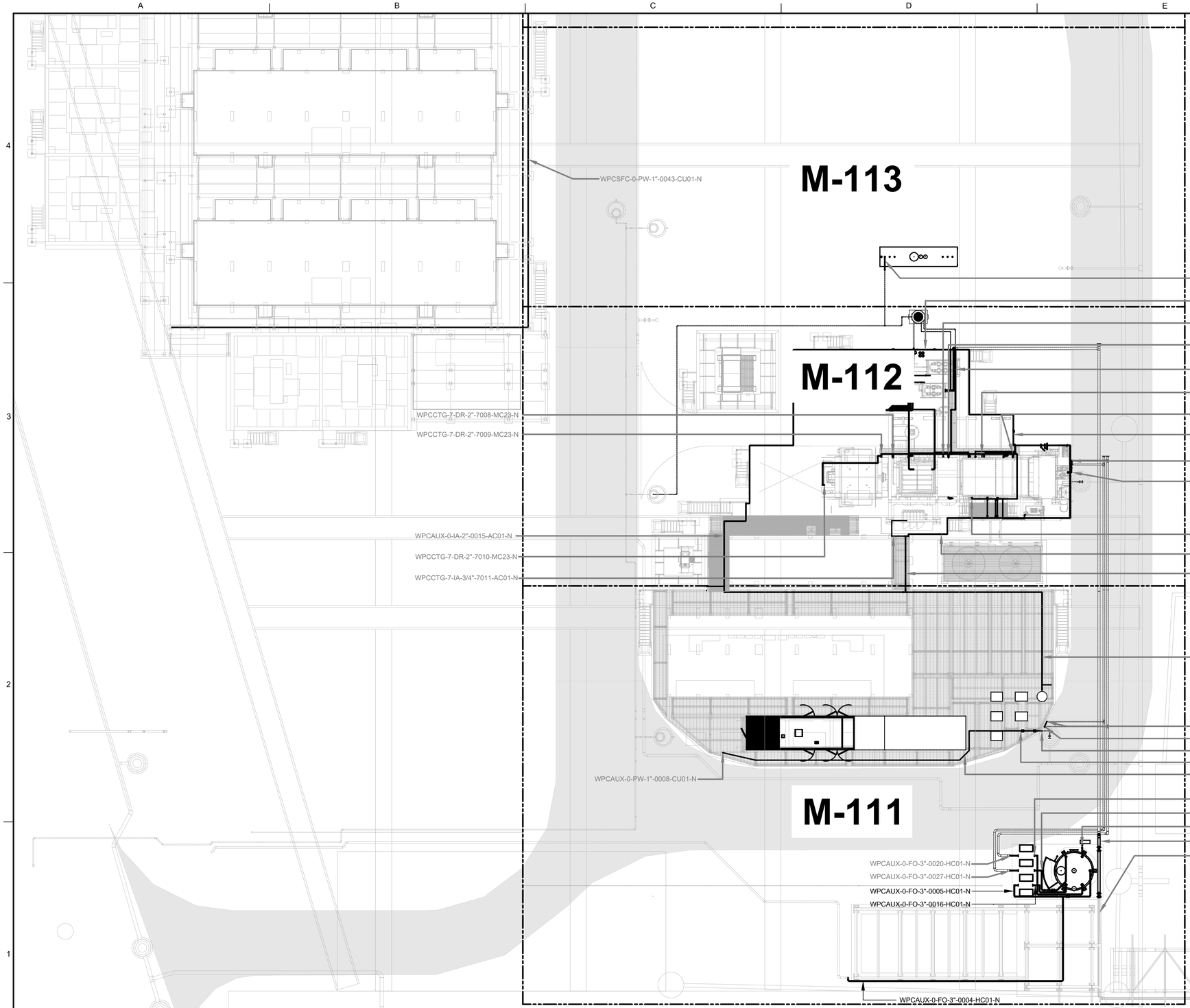

GENERAL NOTES:

A. FOR CLARITY, PIPING 2" AND SMALLER MAY NOT BE SHOWN. REFER TO PIPING AND INSTRUMENTATION DIAGRAMS FOR COMPLETE INVENTORY OF PIPING, VALVES, AND INSTRUMENTATION.

B. PROVIDE LOW POINT DRAINS AND HIGH POINT VENTS AS REQUIRED TO COMPLETELY DRAIN AND VENT ALL LIQUID SYSTEMS.

C. THE CONTENT OF THIS DRAWING IS BASED ON PRELIMINARY INFORMATION FOR EQUIPMENT NOT YET PURCHASED. IT IS THE RESPONSIBILITY OF THE CONTRACTOR TO VERIFY THE ACCURACY OF THE CONTENT AND MAKE REQUIRED CHANGES BASED ON CONTRACTOR FINAL DESIGN.

D. ALL GREYED-OUT TEXT REPRESENTS EQUIPMENT, PIPING, AND COMPONENTS INSTALLED UNDER PERVIOUS CONTRACTS. THESE ITEMS ARE SHOWN FOR REFERENCE ONLY AND ARE NOT INCLUDED IN THE SCOPE OF THIS CONTRACT. THE CONTRACTOR SHALL:
- FIELD VERIFY ALL EXISTING CONDITIONS INCLUDING PIPING, VALVES, INSTRUMENTS, AND CONNECTION POINTS PRIOR TO COMMENCING WORK.
- COORDINATE NEW INSTALLATIONS TO ENSURE PROPER FIT-UP AND CONNECTION TO EXISTING SYSTEMS WHERE REQUIRED.
- REPORT ANY DISCREPANCIES BETWEEN DRAWINGS AND ACTUAL FIELD CONDITIONS TO THE ENGINEER BEFORE PROCEEDING.
- PROTECT EXISTING EQUIPMENT AND PIPING FROM DAMAGE DURING CONSTRUCTION ACTIVITIES.
- COORDINATION WITH OTHER SCOPES - VERIFY CLEARANCES AND INTERFACES WITH ELECTRICAL, STRUCTURAL, AND CIVIL WORKS.

E. THE CONTRACTOR SHALL REFER TO ALL APPLICABLE MECHANICAL SPECIFICATIONS, PROJECT DRAWINGS, AND CONTRACT DOCUMENTS FOR COMPLETE INSTALLATION REQUIREMENTS, INCLUDING BUT NOT LIMITED TO:
- REQUIRED SUBMITTALS-THE CONTRACTOR SHALL PREPARE AND SUBMIT ALL REQUIRED DOCUMENTATION FOR REVIEW AND APPROVAL PRIOR TO COMMENCING WORK.
- MATERIAL STANDARDS AND APPROVALS- ENSURE ALL MATERIALS MEET SPECIFIED CODES AND STANDARDS
- INSTALLATION PROCEDURES-FOLLOW DETAILED INSTRUCTIONS FOR PIPING, SUPPORTS, INSTALLATION, AND EQUIPMENT ALIGNMENT.
- TESTING AND COMMISSIONING REQUIREMENTS - PERFORM PRESSURE TESTS, LEAK CHECKS, AND SYSTEM VERIFICATION AS OUTLINED IN SPECIFICATIONS.
- QUALITY ASSURANCE AND INSPECTION - COMPLY WITH INSPECTION HOLD POINTS AND DOCUMENTATION REQUIREMENTS

KEYED NOTES: (XXX)

LEGEND

TIE-IN POINT

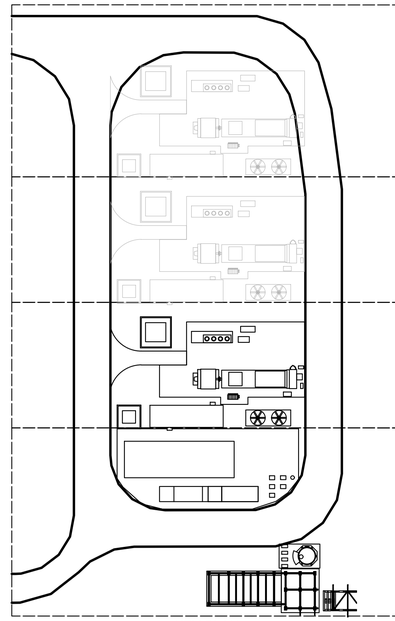

KEY PLAN

REV.	DATE	DESCRIPTION	BY
0	03/06/2026	ISSUED FOR BID	LR

STATE OF LOUISIANA
Lane Richard
License No. 0047786
PROFESSIONAL ENGINEER IN MECHANICAL ENGINEERING

SEWERAGE AND WATER BOARD OF NEW ORLEANS

CONTRACT No. 1444

WEST POWER COMPLEX @ CWTP
FUEL OIL DELIVERY SYSTEM

PROCESS MECHANICAL

ABOVE GROUND PIPING KEY PLAN

SCALE: 1"=16'

TRUE NORTH

C1 **PROCESS MECHANICAL OVERALL SITE PLAN**
SCALE: 1/16"=1'-0"

Jacobs

DATE		JOB NO.	D3483600
DESIGNED BY: L. RICHARD			
FILE NAME: M-110.dwg			
DR. J.MORGAN	CK: L.LINDLEY	AP: L.RICHARD	M110
LAST EDIT:			
SCALE: 1/16" = 1'-0"	DATE: 03/06/2026		DWG. No. 12196-W-24
SET NO:			SHEET NO: 59 OF 72

M-110.dwg 3/8/2026 8:31:28 PM

REUSE OF DOCUMENTS: THIS DOCUMENT AND THE IDEAS AND DESIGNS INCORPORATED HEREIN, AS AN INSTRUMENT OF PROFESSIONAL SERVICE, IS THE PROPERTY OF JACOBS AND IS NOT TO BE USED, IN WHOLE OR IN PART, FOR ANY OTHER PROJECT WITHOUT THE WRITTEN AUTHORIZATION OF JACOBS.
JACOBS 2022. ALL RIGHTS RESERVED.

BID PACKAGE - NOT FOR CONSTRUCTION

MATCH LINE
RE: M112, SEE REFERENCE DRAWINGS

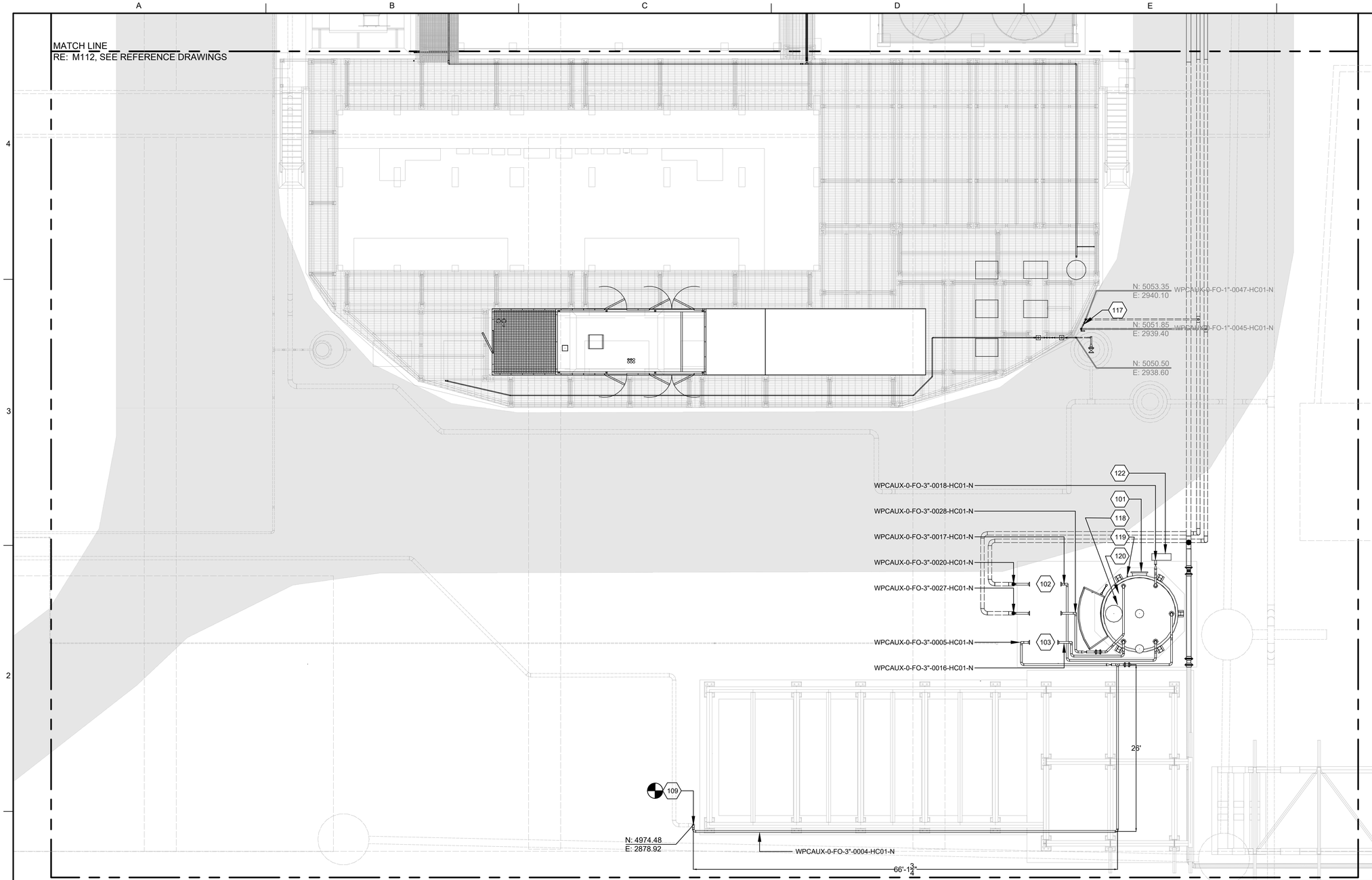

KEYED NOTES: (XXX)

101. FUEL OIL DAY TANK, T-01.
102. P-01 AND P-02. FUEL OIL SUPPLY PUMPS (EXISTING).
103. P-03 AND P-04. FUEL OIL RETURN PUMPS.
109. COORDINATE TIE-IN LOCATION WITH POWER ENGINEERS
117. EXISTING WPCAUX-0-FO-FIT-019 FUEL OIL FLOW METER.
118. EXISTING WPCAUX-0-FO-LIT-014 FUEL OIL LEVEL TRANSMITTER.
119. EXISTING WPCAUX-0-FO-LI-038 FUEL OIL LEVEL GAUGE.
120. EXISTING WPCAUX-0-FO-LSHH-037 FUEL OIL LEVEL SWITCH.
122. EXISTING FUEL OIL UNLOADING STATION, SPILL PREVENTION CONTAINER.

LEGEND

TIE-IN POINT

0 4' 8' 16' 24'
SCALE: 1"=8'

TRUE NORTH

C1 **PROCESS MECHANICAL PLAN - WPCAUX**
1/8"=1'-0"

GENERAL NOTES:

A. THE CONTENT OF THIS DRAWING IS BASED ON PRELIMINARY INFORMATION FOR EQUIPMENT NOT YET PURCHASED. IT IS THE RESPONSIBILITY OF THE CONTRACTOR TO VERIFY THE ACCURACY OF THE CONTENT AND MAKE REQUIRED CHANGES BASED ON CONTRACTOR FINAL DESIGN.
B. ALL FUEL OIL PIPING AND CONNECTIONS TO THE DAY TANK SHALL BE REVIEWED AND FIELD VERIFIED BEFORE INSTALLING.
C. ALL GREYED-OUT TEXT REPRESENTS EQUIPMENT, PIPING, AND COMPONENTS INSTALLED UNDER PERVIOUS CONTRACTS. THESE ITEMS ARE SHOWN FOR REFERENCE ONLY AND ARE NOT INCLUDED IN THE SCOPE OF THIS CONTRACT. THE CONTRACTOR SHALL:
- FIELD VERIFY ALL EXISTING CONDITIONS INCLUDING PIPING, VALVES, INSTRUMENTS, AND CONNECTION POINTS PRIOR TO COMMENCING WORK.
- COORDINATE NEW INSTALLATIONS TO ENSURE PROPER FIT-UP AND CONNECTION TO EXISTING SYSTEMS WHERE REQUIRED.
- REPORT ANY DISCREPANCIES BETWEEN DRAWINGS AND ACTUAL FIELD CONDITIONS TO THE ENGINEER BEFORE PROCEEDING.
- PROTECT EXISTING EQUIPMENT AND PIPING FROM DAMAGE DURING CONSTRUCTION ACTIVITIES.
- COORDINATION WITH OTHER SCOPES - VERIFY CLEARANCES AND INTERFACES WITH ELECTRICAL, STRUCTURAL, AND CIVIL WORKS.

D. THE CONTRACTOR SHALL REFER TO ALL APPLICABLE MECHANICAL SPECIFICATIONS, PROJECT DRAWINGS, AND CONTRACT DOCUMENTS FOR COMPLETE INSTALLATION REQUIREMENTS, INCLUDING BUT NOT LIMITED TO:
- REQUIRED SUBMITTALS-THE CONTRACTOR SHALL PREPARE AND SUBMIT ALL REQUIRED DOCUMENTATION FOR REVIEW AND APPROVAL PRIOR TO COMMENCING WORK.
- MATERIAL STANDARDS AND APPROVALS- ENSURE ALL MATERIALS MEET SPECIFIED CODES AND STANDARDS
- INSTALLATION PROCEDURES-FOLLOW DETAILED INSTRUCTIONS FOR PIPING, SUPPORTS, INSTALLATION, AND EQUIPMENT ALIGNMENT.
- TESTING AND COMMISSIONING REQUIREMENTS - PERFORM PRESSURE TESTS, LEAK CHECKS, AND SYSTEM VERIFICATION AS OUTLINED IN SPECIFICATIONS.
- QUALITY ASSURANCE AND INSPECTION - COMPLY WITH INSPECTION HOLD POINTS AND DOCUMENTATION REQUIREMENTS

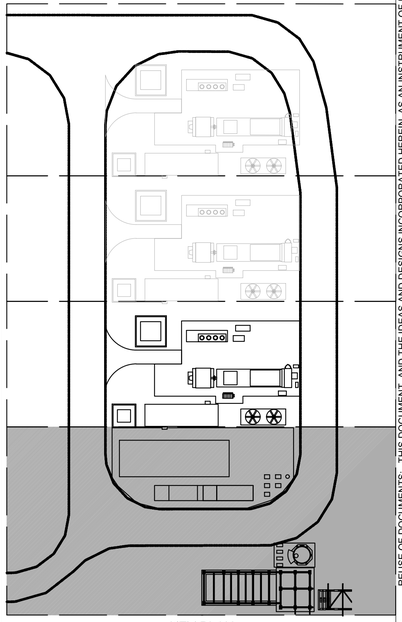

KEY PLAN

REV.	DATE	DESCRIPTION	BY
0	03/06/2026	ISSUED FOR BID	LR

STATE OF LOUISIANA
Lane Richard
License No. 0047786
PROFESSIONAL ENGINEER IN MECHANICAL ENGINEERING

SEWERAGE AND WATER BOARD OF NEW ORLEANS

CONTRACT No. 1444
WEST POWER COMPLEX @ CWTP
FUEL OIL DELIVERY SYSTEM

PROCESS MECHANICAL

ABOVE GROUND PLAN - WPCAUX

Jacobs

DATE		JOB NO.	D3483600
DESIGNED BY: L. RICHARD			
FILE NAME: M-111.dwg			

DR.	J.MORGAN	A/E DWG NO.	M111
CK:	L.LINDLEY		
AP:	L. RICHARD		
LAST EDIT:		DWG. No.	12196-W-24
SCALE:	1/8" = 1'-0"		
DATE:	03/06/2026	SET NO:	SHEET NO: 60 OF 72

M-111.dwg
3/8/2026
8:31:50 PM

© JACOBS 2022. ALL RIGHTS RESERVED.
REUSE OF DOCUMENTS: THIS DOCUMENT, AND THE IDEAS AND DESIGNS INCORPORATED HEREIN, AS AN INSTRUMENT OF PROFESSIONAL SERVICE, IS THE PROPERTY OF JACOBS AND IS NOT TO BE USED, IN WHOLE OR IN PART, FOR ANY OTHER PROJECT WITHOUT THE WRITTEN AUTHORIZATION OF JACOBS.

BID PACKAGE - NOT FOR CONSTRUCTION

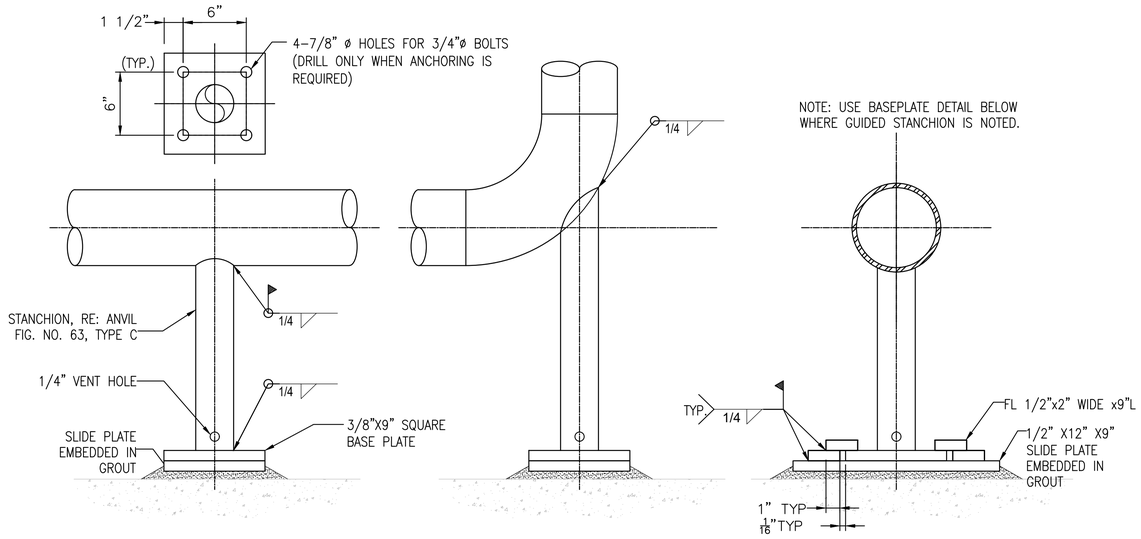

B3 TYPICAL PIPE STANCHION DETAIL
NTS

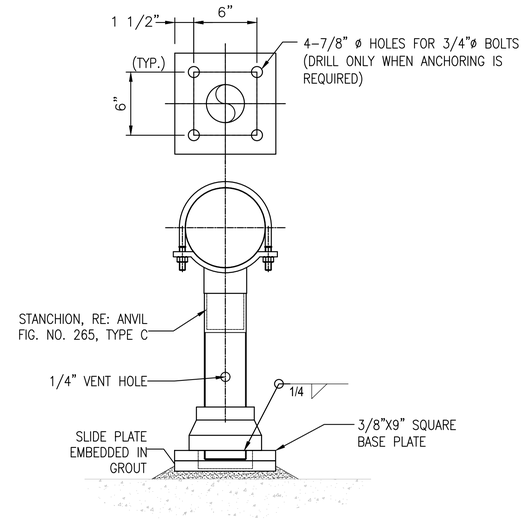

E3 TYPICAL PIPE SADDLE DETAIL
NTS

GENERAL NOTES:

A. PIPE SUPPORT DETAILS SHALL BE USED WITH MAXIMUM PIPE SPACING AS DEFINED BY ASME B31.1.
B. UNLESS SPECIFICALLY NOTED OTHERWISE, ALL PIPE SUPPORT HARDWARE SHALL BE HOT DIPPED GALVANIZED. REPAIR ANY DAMAGED GALVANIZED PLATING WITH A COATING OF "GALVALUM".
C. WHERE SUPPORTS ARE NOT SPECIFICALLY IDENTIFIED ON PLANS, CONTRACTOR SHALL PROVIDE PIPE SUPPORTS IN COMPLIANCE WITH SPECIFICATIONS. CONTRACTOR IS RESPONSIBLE FOR PROVIDING A COMPLETE PIPE SUPPORT SYSTEM.

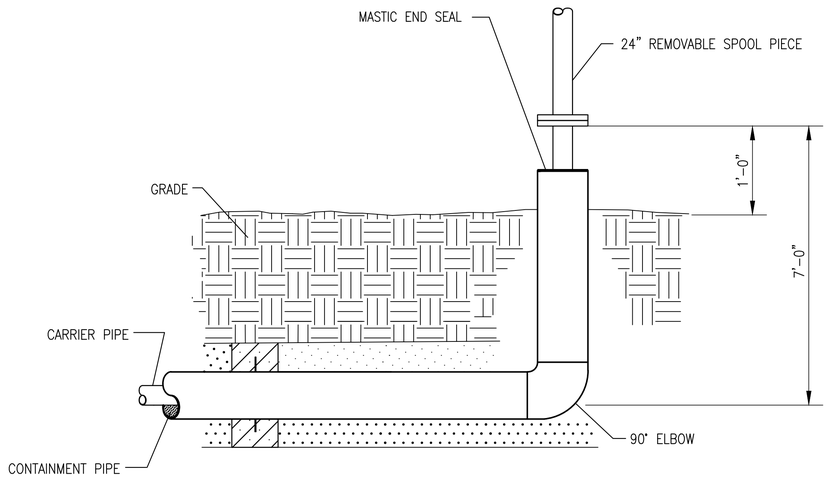

A1 DOUBLE WALL CONTAINMENT UNDERGROUND PIPE RISER DETAIL
NTS

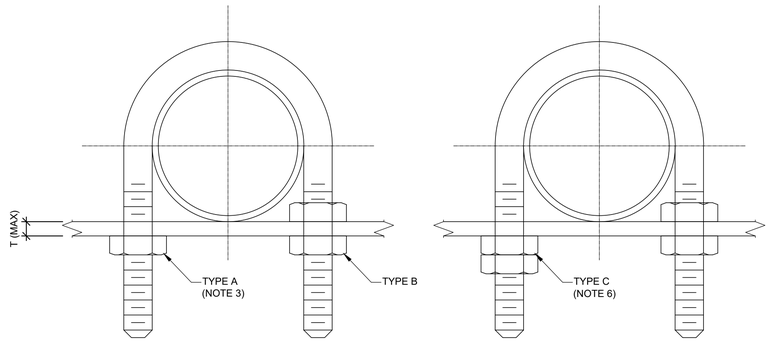

NOTES:

1. ALL MATERIAL TO BE ASTM-A36.
2. USE ANVIL FIG. NO. 137 OR APPROVED EQUAL. REFER TO ANVIL PRODUCT DATA FOR APPROPRIATE SIZING.
3. TYPE A USED UNLESS SPECIFIED OTHERWISE.
4. T(MAX) NOT TO EXCEED 1".
5. TYPE B CANNOT BE USED ON PIPE SIZES 1/2" THROUGH 2".
6. TYPE C USED FOR PULSATING SERVICE.
7. WHERE PIPE EXPANSION IS EXPECTED OR WHEN USED AS A GUIDE, USE TYPE A UP TO 2" AND TYPE B FOR PIPE SIZES GREATER THAN 2". LEAVE 1/8" GAP BETWEEN TOP OF PIPE AND U-BOLT.

D1 U-BOLT DETAIL
NTS

STATE OF LOUISIANA
Lane Richard
License No. 0047786
PROFESSIONAL
ENGINEER
IN
MECHANICAL ENGINEERING

REV.	DATE	DESCRIPTION	BY
0	03/06/2026	ISSUED FOR BID	LR

SEWERAGE AND WATER BOARD
OF NEW ORLEANS

CONTRACT No. 1444
WEST POWER COMPLEX @ CWTP
FUEL OIL DELIVERY SYSTEM

PROCESS MECHANICAL

MECHANICAL DETAILS

Jacobs

DATE		JOB NO.	D3483600
DESIGNED BY: L. RICHARD			
FILE NAME: M-500.dwg			

DR:	J.MORGAN
CK:	L.LINDLEY
AP:	L. RICHARD
LAST EDIT:	
SCALE:	NTS
DATE:	03/06/2026

A/E DWG NO. M-500
DWG. No. 12196-W-24
SET NO: SHEET NO: 61 OF 72

REUSE OF DOCUMENTS: THIS DOCUMENT, AND THE IDEAS AND DESIGNS INCORPORATED HEREIN, AS AN INSTRUMENT OF PROFESSIONAL SERVICE, IS THE PROPERTY OF JACOBS AND IS NOT TO BE USED, IN WHOLE OR IN PART, FOR ANY OTHER PROJECT WITHOUT THE WRITTEN AUTHORIZATION OF JACOBS.
© JACOBS 2022. ALL RIGHTS RESERVED.

BID PACKAGE - NOT FOR CONSTRUCTION

COMBUSTION TURBINE GENERATOR SCHEDULE

EQUIPMENT TAG	SERVICE	LOCATION	TYPE	FUEL GAS CONSUMPTION - LHV (MMBTU/HR)	INLET AIR TEMPERATURE (°F)	EXHAUST FLOW (LB/HR)	EXHAUST TEMP (°F)	NET HEAT RATE - LHV (BTU/KW-HR)	NET POWER OUTPUT (KW)	VOLTAGE (KV)	FREQUENCY (HERTZ)	PHASE	POWER FACTOR	MANUFACTURER	MODEL	NOTE
WPCCTG-7-CTG-7	COMBUSTION TURBINE GENERATOR	WEST POWER COMPLEX SITE, OUTDOORS	DUAL FUEL COMBUSTION TURBINE	197.85	59	552,451	870	8,875	22,294	13.8	60	3	0	SOLAR	MA	1, 2

NOTES:
1. PERFORMANCE INFORMATION SHOWN HERE IS AT ISO CONDITIONS (59 DEG F AMBIENT TEMPERATURE) WHILE BURNING NATURAL GAS.
2. COMBUSTION TURBINE PACKAGE INCLUDING GENERATOR, AUXILIARIES, FUEL GAS COMPRESSOR, AND INTERCONNECTING PIPING ALL SUPPLIED UNDER CONTRACT PACKAGE 1438.

GENERATOR SCHEDULE

EQUIPMENT TAG	SERVICE	LOCATION	TYPE	NET OUTPUT (KW)	VOLTAGE (V)	FREQUENCY (HERTZ)	PHASE	MANUFACTURER	MODEL	DIMENSIONS	QTY	NOTES
WPCAUX-0-EMV60-DG-01	EMERGENCY DIESEL GENERATOR	WEST POWER COMPLEX SITE, OUTDOORS	ENGINE GENERATOR	2,000	4,160	60	3	KOHLER	2000REOZMD	167"H x 124" x 511"L	1	1

NOTES:
1. EMERGENCY DIESEL GENERATOR TO BE PROCURED IN FUTURE PACKAGE, NOT PART OF CP-1444. MODEL SHOWN ABOVE IS BASIS OF DESIGN. BASIS INCLUDES 1,350 GAL SUB BASE FUEL TANK.

PUMP SCHEDULE

EQUIPMENT TAG	SERVICE	LOCATION	TYPE	MOTOR HP	VOLTAGE (V)	FREQUENCY (HERTZ)	PHASE	MANUFACTURER	MODEL	DIMENSIONS	QTY	NOTES
WPCAUX-0-FO-P-01	FUEL OIL FORWARDING SUPPLY	WEST POWER COMPLEX SITE, OUTDOORS	POSITIVE DISPLACEMENT	10	480	60	3	VIKING	L8124A		1	
WPCAUX-0-FO-P-02	FUEL OIL FORWARDING SUPPLY	WEST POWER COMPLEX SITE, OUTDOORS	POSITIVE DISPLACEMENT	10	480	60	3	VIKING	L8124A		1	
WPCAUX-0-FO-P-03	FUEL OIL FORWARDING RETURN	WEST POWER COMPLEX SITE, OUTDOORS	POSITIVE DISPLACEMENT	10	480	60	3	VIKING	L8124A		1	2
WPCAUX-0-FO-P-04	FUEL OIL FORWARDING RETURN	WEST POWER COMPLEX SITE, OUTDOORS	POSITIVE DISPLACEMENT	10	480	60	3	VIKING	L8124A		1	2
WPCCTG-7-DR-SP-01	WASTE WATER FORWARDING PUMP	WEST POWER COMPLEX SITE, OUTDOORS	VERTICAL SUMP	1.5	480	60	3	WEIL	1622		1	
WPCCTG-7-DR-SP-02	WASTE WATER FORWARDING PUMP	WEST POWER COMPLEX SITE, OUTDOORS	VERTICAL SUMP	1.5	480	60	3	WEIL	1622		1	
WPCCTG-8-DR-SP-01	WASTE WATER FORWARDING PUMP	WEST POWER COMPLEX SITE, OUTDOORS	VERTICAL SUMP	1.5	480	60	3	WEIL	1622		1	1
WPCCTG-8-DR-SP-02	WASTE WATER FORWARDING PUMP	WEST POWER COMPLEX SITE, OUTDOORS	VERTICAL SUMP	1.5	480	60	3	WEIL	1622		1	1
WPCCTG-9-DR-SP-01	WASTE WATER FORWARDING PUMP	WEST POWER COMPLEX SITE, OUTDOORS	VERTICAL SUMP	1.5	480	60	3	WEIL	1622		1	1
WPCCTG-9-DR-SP-02	WASTE WATER FORWARDING PUMP	WEST POWER COMPLEX SITE, OUTDOORS	VERTICAL SUMP	1.5	480	60	3	WEIL	1622		1	1

NOTES:
1. FUTURE EQUIPMENT.
2. CONTRACT 1444 SCOPE

© JACOBS 2022. ALL RIGHTS RESERVED.
REUSE OF DOCUMENTS: THIS DOCUMENT, AND THE IDEAS AND DESIGNS INCORPORATED HEREIN, AS AN INSTRUMENT OF PROFESSIONAL SERVICE, IS THE PROPERTY OF JACOBS AND IS NOT TO BE USED, IN WHOLE OR IN PART, FOR ANY OTHER PROJECT WITHOUT THE WRITTEN AUTHORIZATION OF JACOBS.

BID PACKAGE - NOT FOR CONSTRUCTION

REV.	DATE	DESCRIPTION	BY
0	03/06/2026	ISSUED FOR BID	LR

STATE OF LOUISIANA
Lane Richard
License No. 0047786
PROFESSIONAL ENGINEER IN MECHANICAL ENGINEERING

SEWERAGE AND WATER BOARD OF NEW ORLEANS

CONTRACT No. 1444

WEST POWER COMPLEX @ CWTP
FUEL OIL DELIVERY SYSTEM

PROCESS MECHANICAL

EQUIPMENT SCHEDULES

Jacobs

DATE		JOB NO.	D3483600
DESIGNED BY: L. RICHARD			
FILE NAME: M-601.dwg			

DR.	J.MORGAN
CK:	L.LINDLEY
AP:	L. RICHARD
LAST EDIT:	
SCALE:	NTS
DATE:	03/06/2026

A/E DWG NO. M601

DWG. No. 12196-W-24

SET NO: SHEET NO: 62 OF 72

M-601.dwg 3/8/2026 8:32:21 PM

PIPING SCHEDULE

SERVICE	LEGEND	PIPE SPECIFICATION	SIZE(S) (IN)	PIPING MATERIAL	NORMAL OPERATING PRESSURE	TEST PRESSURE	PRESSURE TEST	PIPE LABEL COLORS	PIPE LABELS	JOINT TYPE	NOTES
					PSIG	PSIG					
INSTRUMENT AIR	IA	AC01	2" AND SMALLER	CST SCH 80	150	180	P	BLUE-WHITE	INSTRUMENT AIR	SW, FL	
INSTRUMENT AIR	IA	AC01	2-1/2" AND LARGER	CST SCH 40	150	180	P	BLUE-WHITE	INSTRUMENT AIR	W, FL	
DRAIN PIPE	DR	MC23	2" AND SMALLER	CST SCH 80	5	PC	PC	BY SERVICE	BY SERVICE	SW, FL	NOTE 1
DRAIN PIPE	DR	MC23	2-1/2" AND LARGER	CST SCH 40	5	PC	PC	BY SERVICE	BY SERVICE	W, FL	NOTE 1
LOW PRESSURE FUEL GAS	FG	HC01	2-1/2" AND LARGER	CST SCH 40	180	270	H	YELLOW-BLACK	FUEL GAS	W, FL	NOTES 1, 2, 3, 5
FUEL OIL (ABOVE GROUND)	FO	HC01	2" AND SMALLER	CST SCH 80	100	150	H	BROWN-WHITE	FUEL OIL	SW, FL	NOTE 6
FUEL OIL (ABOVE GROUND)	FO	HC01	2-1/2" AND LARGER	CST SCH 40	100	150	H	BROWN-WHITE	FUEL OIL	W, FL	NOTE 6
FUEL OIL (BELOW GROUND)	FO	YHD	2" AND SMALLER	CST SCH 80	100	120	P	BROWN-WHITE	FUEL OIL	SW, FL	NOTE 4, NOTE 6
FUEL OIL (BELOW GROUND)	FO	YHD	2-1/2" AND LARGER	CST SCH 40	100	120	P	BROWN-WHITE	FUEL OIL	W, FL	NOTE 6
POTABLE WATER	PW	CU01	2" AND SMALLER	CU TYPE K	100	150	PC	GREEN-WHITE	POTABLE WATER	SO	
VENT PIPE	VT	MC23	2" AND SMALLER	CST SCH 80	5	PC	PC	BY SERVICE	BY SERVICE	SW, FL	NOTE 1
VENT PIPE	VT	MC23	2-1/2" AND LARGER	CST SCH 40	5	PC	PC	BY SERVICE	BY SERVICE	W, FL	NOTE 1

PIPING SCHEDULE LEGEND

PIPING MATERIAL		JOINT TYPE		PRESSURE TEST		
CISP	CAST IRON SOIL PIPE	FL	FLANGED	H	HYDROSTATIC	
CST	CARBON STEEL PIPE	GR	GROOVED	NA	NOT APPLICABLE	
CU	COPPER	NH	NO-HUB	NF	TEST PER APPROPRIATE NFPA STANDARD	
DI	CEMENT MORTAR LINED DUCTILE IRON	SO	SOLDERED	P	PNEUMATIC	
PVC	POLYVINYL CHLORIDE	SW	SOCKET WELD	PC	TEST PER INTERNATIONAL PLUMBING CODE	
MDPE	MEDIUM DENSITY POLYETHYLENE	TH	THREADED			
SS	STAINLESS STEEL	W	BUTT WELDED			
DI	DUCTILE IRON	SWH	SOLVENT WELDED JOINT			
		HF	HEAT FUSION			

GENERAL COMMENTS

A	EXTERNAL PIPING SHALL BE TESTED IN ACCORDANCE TO ASME B31.1 SECTION 137.3
B	HYDRO TESTS SHALL FOLLOW ASME B31.1 SECTION 137.4 AND BE A MINIMUM OF 1.5 THE DESIGN PRESSURE
C	PNEUMATIC TEST SHALL BE BETWEEN 1.2 AND 1.5 TIMES THE DESIGN PRESSURE PER ASME B31.1 SECTION 137.5
D	REFER TO THE LINE NUMBER DESIGNATIONS FOR THICKNESS REQUIREMENTS. ALL INSULATED PIPING LOCATED OUTDOORS TO HAVE ALUMINUM JACKET.
E	MATERIALS AND TESTING FOR DRAINS SHALL BE IN ACCORDANCE WITH THE SYSTEM TO WHICH THEY ARE ATTACHED. ATMOSPHERIC DRAINS DO NOT REQUIRE A PRESSURE TEST.

NOTES

1	REFER TO REQUIREMENTS IN ASME A13.1 FOR SPECIFIC INFORMATION REGARDING LABEL COLORS. ALL CARBON STEEL SURFACES THAT ARE NOT INSULATED SHALL BE PRIIMED AND FINISH COATED. SURFACE PREPARATION
	SHALL BE IN ACCORDANCE WITH PAINT MANUFACTURER'S REQUIREMENTS. COLORS TO BE IN ACCORDANCE WITH ASME A13.1. UNDERGROUND PIPE SHALL BE COATED WITH AN EPOXY COATING IN ACCORDANCE WITH
	SPECIFICATION SECTION 15 34 42 - UNDERGROUND PIPING.
2	UNLESS REQUIRED FOR CONNECTION TO EQUIPMENT OR INLINE COMPONENTS SUCH AS FLOW METERS AND CONTROL VALVES, VALVES ON THE GAS SYSTEM SHALL BE SOCKET WELDED OR BUTTWELDED.
3	WHERE REQUIRED FOR CONNECTIONS TO VENDOR FURNISHED EQUIPMENT, FLANGE CLASS MAY DIFFER FROM THE PIPING CLASS IDENTIFIED ON P-001. CONTRACTOR TO COORDINATE FLANGE RATINGS AT VENDOR INTERFACES.
4	BELOW GRADE FUEL OIL PIPE SHALL BE DOUBLE WALL CONTAINMENT PIPE. CONTAINMENT AND CARRIER PIPE SHALL BE OF SAME MATERIAL AND TESTED TO THE SAME TEST PRESSURE. THE CONTAINMENT PIPE SHALL BE COATED
	AND SUITABLE FOR BELOW GRADE SERVICE. CONTAINMENT PIPE SHALL CONTAIN LEAK DETECTION AND ALARM SYSTEM.
5	BELOW GRADE FUEL GAS PIPE SHALL BE EPOXY COATED AND CATHODICALLY PROTECTED IN ACCORDANCE WITH SPECIFICATION SECTION 48 50 90 - CATHODIC PROTECTION.
6	CONTRACT 1444 SCOPE

REV.	DATE	DESCRIPTION	BY
0	03/06/2026	ISSUED FOR BID	LR

STATE OF LOUISIANA
Lane Richard
License No. 0047786
PROFESSIONAL ENGINEER IN MECHANICAL ENGINEERING

SEWERAGE AND WATER BOARD OF NEW ORLEANS

CONTRACT No. 1444

WEST POWER COMPLEX @ CWTP
FUEL OIL DELIVERY SYSTEM

PROCESS MECHANICAL

PIPING SPECIFICATIONS SCHEDULE

Jacobs

DATE		JOB NO.	D3483600
DESIGNED BY:	L. RICHARD		
FILE NAME:	M-603.dwg		

DR:	J.MORGAN
CK:	L.LINDLEY
AP:	L. RICHARD
LAST EDIT:	
SCALE:	NTS
DATE:	03/06/2026

A/E DWG NO. M603

DWG. No. 12196-W-24

SET NO: SHEET NO: 63 OF 72

© JACOBS 2022. ALL RIGHTS RESERVED.
REUSE OF DOCUMENTS: THIS DOCUMENT, AND THE IDEAS AND DESIGNS INCORPORATED HEREIN, AS AN INSTRUMENT OF PROFESSIONAL SERVICE, IS THE PROPERTY OF JACOBS AND IS NOT TO BE USED, IN WHOLE OR IN PART, FOR ANY OTHER PROJECT WITHOUT THE WRITTEN AUTHORIZATION OF JACOBS.

BID PACKAGE - NOT FOR CONSTRUCTION

ABBREVIATIONS

AS	AIR SEPARATOR
AUX ELEC	AUXILIARY ELECTRICAL
BAS	BUILDING AUTOMATION SYSTEM
BFP	BOILER FEED PUMP
BLDG	BUILDING
BOP	BALANCE OF PLANT
BSG	BLACK START GENERATOR
CAB	CABINET
CCTV	CLOSED CIRCUIT TELEVISION
CT	COOLING TOWER
CTG	COMBUSTION TURBINE GENERATOR
CTR|R	CONTROL ROOM
CWP	COOLING WATER PUMP
DA	DEAERATOR
ENCL	ENCLOSURE
FGC	FUEL GAS COMPRESSOR
FOTP	FUEL OIL TRANSFER PUMP
FOFP	FUEL OIL FORWARDING PUMP
FPP	FIBER PATCH PANEL
HMI	HUMAN MACHINE INTERFACE
HRSG	HEAT RECOVERY STEAM GENERATOR
HVAC	HEATING, VENTILATION AND AIR CONDITIONING
IAC	INSTRUMENT AIR COMPRESSOR
IED	INTELLIGENT ELECTRONIC DEVICES
IOT	INTERNET OF THINGS
MW	MEGA-WATT
NG	NATURAL GAS
OWS	OPERATOR WORK STATION
PAC	PROCESS AUTOMATION CONTROLLER
PC	PERSONAL COMPUTER
PCHWP	PRIMARY CHILLED WATER PUMP
PCS	PLANT CONTROL SYSTEM
PDCS	POWER DISTRIBUTION CONTROL SYSTEM
PLC	PROGRAMMABLE LOGIC CONTROLLER
PSS	PROCESS SCADA SYSTEM
RTAC	REAL-TIME AUTOMATION CONTROLLER
SCADA	SUPERVISORY CONTROL AND DATA AQUISITION
SFC	STATIC FREQUENCY CONVERTER
STG	STEAM TURBINE GENERATOR
TES	THERMAL ENERGY STORAGE
TSP	TWISTED SHIELDED PAIR
UPS	UN-INTERRUPTIBLE POWER SUPPLY
WPC	WEST POWER COMPLEX

SYMBOLS

- PLC
- REMOTE I/O PANEL / VENDOR SUPPLIED CONTROLLER
- POINT I/O
- THIN CLIENT
- VIDEO WALL MONITOR
- ENGINEERING WORKSTATION
- RACK MOUNT SERVER
- WIFI ROUTER
- NETWORKING SWITCH
- KVM SWITCH
- FIREWALL
- INSTRUMENTATION / END DEVICES
- TRANSMITTER
- RTD/THERMOCOUPLE
- PROCESS SWITCH
- CONTROL VALVE
- SMART AS-P SERVER / CONTROLLER (BAS)
  BUILDING AUTOMATION CONTROLLER (BAS)
- ELECTRICAL PROTECTION RELAYS
- VIDEO CAMERA DEVICE
- PRINTER
- STRATIX SWITCH
- MEDIA CONVERTER
- REAL-TIME AUTOMATION CONTROLLER
- FIBER OPTIC PATCH PANEL
- AUDIO SOURCE
- VMS CAMERA
- HMI - PANEL MOUNT
- RACK MOUNT COMPUTER
- HISTORIAN SERVER
- WIFI DEVICE
- NETWORK CABINET SECURITY SECTION
- SECURITY CONTROL PANEL
- CARD READER
- DOOR SWITCH
- ELECTRONIC LOCK
- TIME CLOCK

NETWORKS & LINETYPES

- 48 STRAND SINGLE MODE FIBER OPTIC
- 24 STRAND SINGLE MODE FIBER OPTIC
- 12 STRAND SINGLE MODE FIBER OPTIC
- 6 STRAND SINGLE MODE FIBER OPTIC
- CAT 6A OR 5E AS APPLICABLE
- TERMINATIONS
- CONTINUATION OFF DWG

SHEET INDEX

DRAWING NO.	DESCRIPTION
IC001	NETWORK SYMBOLS AND LEGENDS
IC100	NETWORK OVERVIEW FOR WPC PRIOR TO WPC OPERATIONS BEING ONLINE
IC700	ELECTRICAL DISTRIBUTION FIBER OPTIC NETWORK OVERVIEW
IC702	FIBER COMMUNICATION DETAILS FOR FUEL OIL TRANSFER PUMP
IC711	GROUNDING AND BONDING DETAILS
IC712	STANDARD DETAILS
IC713	STANDARD DETAILS
IC714	STANDARD DETAILS
IC715	STANDARD DETAILS

TELECOM ABBREVIATIONS

ACS	ACCESS CONTROL SYSTEM
ACEG	ALTERNATING CURRENT ELECTRIC GROUND
AFC	ABOVE FINISHED CEILING
AFF	ABOVE FINISHED FLOOR
AFG	ABOVE FINISHED GRADE
ANN	ANNUNCIATOR
ARCH	ARCHITECTURAL
AV	AUDIO AND VISUAL
AWG	AMERICAN WIRE GUAGE
BAS	BUILDING AUTOMATION SYSTEM
BATT	BATTERY
BB	BACKBONE
BBV	BACKBONE VOICE
BET	BUILDING ENTRANCE TERMINAL
BLDG	BUILDING
BMS	BALANCED MAGNETIC SWITCH
C	CONDUIT
CAB	CABINET
CAT	CATEGORY
CCTV	CLOSED CIRCUIT TELEVISION
CFCI	CONTRACTOR FURNISHED / CONTRACTOR INSTALLED
CFOI	CONTRACTOR FURNISHED / OWNER INSTALLED
CLG	CEILING
CMH	COMMUNICATIONS MAINTENANCE HOLE
COB	CENTER OF BOX
COMM	COMMUNICATIONS
CONST	CONSTRUCTION
CONT	CONTINUATION
DIST	DISTRIBUTION
DWG	DRAWING
EF	ENTRANCE FACILITY
EL	ELEVATION
ELEC	ELECTRICAL
ELEV	ELEVATOR
ELV	EXTRA LOW VOLTAGE
EMER	EMERGENCY
EQPT	EQUIPMENT
EXIST	EXISTING
FA	FIRE ALARM
FACP	FIRE ALARM CONTROL PANEL
FBPP	FIBER BACKBONE PATCH PANEL
FIXT	FIXTURE
FL	FLOOR
FO	FIBER OPTIC
FOC	FIBER OPTIC CABLE
HCPP	HORIZONTAL COPPER PATCH PANEL
HFPP	HORIZONTAL FIBER PATCH PANEL
HOV	HORIZONTAL VOICE
IDS	INTRUSION DETECTION SYSTEM
JB	JUNCTION BOX
MFR	MANUFACTURER
MH	MOUNTING HEIGHT
MMF	MULTI MODE FIBER
MTD	MOUNTED
NIC	NOT IN CONTRACT
NTS	NOT TO SCALE
OFCI	OWNER FURNISHED / CONTRACTOR INSTALLED
OFOI	OWNER FURNISHED / OWNER INSTALLAED
OH	OVERHEAD
OSP	OUTSIDE PLANT
PA	PUBLIC ADDRESS
PB	PULL BOX
PBB	PRIMARY BONDING BUSBAR
PBX	PRIVATE BRANCH EXCHANGE
PC	PERSONAL COMPUTER
PLAS	PLASTIC
PP	PATCH PANEL
PR	PAIR
PWR	POWER
QTY	QUANTITY
RBB	RACK BONDING BUSBAR
RBC	RACK BONDING CONDUCTOR
RECP	RECEPTACLE
REQD	REQUIRED
RGS	RIGID GALVANIZED STEEL
RM	ROOM
RSC	RIGID STEEL CONDUIT
SBB	SECONDARY BONDING BUSBAR
SCRT	SECURITY
SECT	SECTION
SPEC	SPECIFICATION
SMF	SINGLE MODE FIBER
SP	SERVICE PROVIDER
SURF	SURFACE
SW	SWITCH
SYM	SYMMETRICAL
SYS	SYSTEMS
TBB	TELECOMMUNICATIONS BONDING BACKBONE
TBC	TELECOMMUNICATIONS BONDING
TEL	TELEPHONE
TELECOM	TELECOMMUNICATIONS
TER	TELECOMMUNICATIONS EQUIPMENT ROOM
TR	TELECOMMUNICATIONS ROOM
TYP	TYPICAL
UG	UNDERGROUND
UON	UNLESS OTHERWISE NOTED
UPS	UNINTERRUPTIBLE POWER SUPPLY
WAP	WIRELESS ACCESS POINT
WP	WEATHERPROOF
XFR	TRANSFER
XP	EXPLOSION PROOF

GENERAL TELECOM NOTES

1. ALL SYMBOLS, ABBREVIATIONS AND GENERAL NOTES SHOWN ARE NOT NECESSARILY USED ON THIS PROJECT.
2. SEE ONE-LINE DIAGRAM FOR CABLE SIZES, CONDUIT SIZES, AND DEVICES NOT SHOWN ON PLANS.
3. MOUNTING HEIGHTS FOR CEILING MOUNTED DEVICES ARE TO THE BOTTOM OF THE DEVICE, UNLESS OTHERWISE NOTED.
4. MOUNTING HEIGHTS ABOVE FINISHED FLOOR, TO CENTERLINE OF DEVICE, ARE AS FOLLOWS, UNLESS OTHERWISE NOTED.

TELEPHONE OUTLETS	18-INCHES
DATA OUTLETS WALL AND PUBLIC	18-INCHES
TELEPHONE OUTLETS	48-INCHES
COUNTER TOP OUTLETS (CT)	8 INCHES ABOVE COUNTER
WIRELESS ACCESS POINT	12-INCHES ABOVE FINISHED CEILING
HORN SPEAKERS	AS INDICATED
TELEVISION OUTLET (COAX)	AS INDICATED
CARD READER BACK BOX	40-INCHES
SPEAKER VOLUME CONTROL	40-INCHES

5. THE GENERAL CONDITIONS, SUPPLEMENT GENERAL CONDITIONS AND OTHER REQUIREMENTS OF DIVISION 1. THE ELECTRICAL, AUDIO VISUAL, AND SECURITY PLANS AND SPECIFICATIONS MAY APPLY TO THE WORK SPECIFIED.
6. COMMUNICATIONS CABLING INTEGRATOR HEREAFTER REFERRED TO AS "CONTRACTOR" MUST PROVIDE ALL TELECOM EQUIPMENT, CABLING, PATHWAYS AND ASSOCIATED MATERIALS, COMPONENTS, TOOLS AND LABOR TO COMPLETE TELECOMMUNICATIONS STRUCTURED CABLING SYSTEM AND PATHWAYS.
7. CONTRACTOR MUST CAREFULLY EXAMINE THE SITE TO DETERMINE THE EXTENT OF WORK AND CONDITION UNDER WHICH IT WILL BE DONE. REVIEW AND VERIFY CONTRACT DOCUMENTS IN RELATION TO FIELD CONDITIONS TO VERIFY ACCURACY. THE OWNER, OR THEIR DESIGNATED REPRESENTATIVE, SHALL BE CONSULTED AS NEEDED FOR CLARIFICATION OR DIRECTION REGARDING ANY PROJECT RELATED QUESTIONS; THE CONTRACTOR IS RESPONSIBLE FOR OBTAINING CLARIFICATION FROM THE OWNER, OR THEIR DESIGNATED REPRESENTATIVE, PRIOR TO PROCEEDING WITH THE WORK OR RELATED WORK IN QUESTION.
8. DISCREPANCIES BETWEEN THESE PLANS AND ACTUAL FIELD CONDITIONS SHALL BE BROUGHT TO THE IMMEDIATE ATTENTION OF THE GOVERNMENT, OR THEIR DESIGNATED REPRESENTATIVE, FOR CLARIFICATION.
9. REFER TO TECHNOLOGY CONTRACT DOCUMENTS, T DRAWINGS AND DIVISION 27 SPECIFICATIONS AS A UNIT AND IN WHOLE IN THE BIDDING AND INSTALLATION OF THIS PROJECT.
10. CONTRACTOR SHALL READ IN THEIR ENTIRETY ALL SECTIONS OF THE COMMUNICATIONS CABLING SYSTEM DOCUMENTS AND APPLY THEM AS APPROPRIATE FOR WORK IN THIS SECTION.
11. CONTRACTOR SHALL TAKE NECESSARY MEANS TO PROTECT COMMUNICATION SYSTEM COMPONENTS FROM MECHANICAL DAMAGE BEFORE, DURING AND AFTER CONSTRUCTION.
12. CONTRACTOR SHALL REFERENCE DIVISION 27 SPECIFICATIONS FOR ITEMIZED PRICING REQUIREMENTS.
13. PROVIDE 12-INCH BY 4-INCH BASKET TRAY FOR DATA CABLE. PROVIDE SEPARATE 6-INCH BY 4-INCH BASKET TRAY PATHWAYS FOR CAMERA CABLE AND SPEAKER CABLE.
14. FOR EXTERIOR CAMERAS PROVIDE JUNCTION BOXES AND CONDUITS SIZED FOR THE AMOUNT OF CABLE TO CAMERA. PROVIDE JUNCTION BOXES TO PREVENT CUMULATIVE BENDS OF 180-DEGREES BETWEEN PULL POINTS. REFER TO SHEET T-601 FOR ADDITIONAL INFORMATION.
15. CABLING SHALL MEET REQUIREMENTS UNDER TIA-568B.
16. CONNECTOR TYPE: TYPE LC COMPLYING WITH TIA-604-10.
17. REFERENCE SPECS:
    - 270526 GROUNDING AND BONDING FOR COMMUNICATION SYSTEMS.
    - 270548.16 SEISMIC CONTROLS FOR COMMUNICATION SYSTEMS.
    - 271323 COMMUNICATION OPTICAL FIBER BACKBONE CABLING.
    - 271513 COMMUNICATIONS COPPER HORIZONTAL CABLING.
    - 271523 COMMUNICATIONS OPTICAL FIBER HORIZONTAL CABLING.
    - 409533 PROCESS CONTROL NETWORKS.

© JACOBS 2022. ALL RIGHTS RESERVED.
REUSE OF DOCUMENTS: THIS DOCUMENT, AND THE IDEAS AND DESIGNS INCORPORATED HEREIN, AS AN INSTRUMENT OF PROFESSIONAL SERVICE, IS THE PROPERTY OF JACOBS AND IS NOT TO BE USED, IN WHOLE OR IN PART, FOR ANY OTHER PROJECT WITHOUT THE WRITTEN AUTHORIZATION OF JACOBS.

BID PACKAGE - NOT FOR CINSTRUCTION

REV.	DATE	DESCRIPTION	BY
0	03/06/2026	ISSUED FOR BID	JH

STATE OF LOUISIANA
M. YORK BROGDEN
License No. 41618
PROFESSIONAL ENGINEER
2026.03.06 08:51:44-05'00'

SEWERAGE AND WATER BOARD OF NEW ORLEANS

CONTRACT No. 1444

WEST POWER COMPLEX @ CWTP
FUEL OIL DELIVERY SYSTEM

I&C

NETWORK SYMBOLS AND LEGEND

Jacobs

JOB NO.	D3393001
DWG NO.	IC001_D3393001
DESIGNED BY:	J HANDWORK
FILE NAME:	IC001_D3393001_1444.dgn

DR.	J JARVIS
CK:	J HANDWORK
AP:	S REISER
LAST EDIT:	
SCALE:	AS SHOWN
DATE:	03/06/2026

A/E DWG NO. IC001

DWG. No. 12196-W-24

SET NO: SHEET NO: 64 OF 72

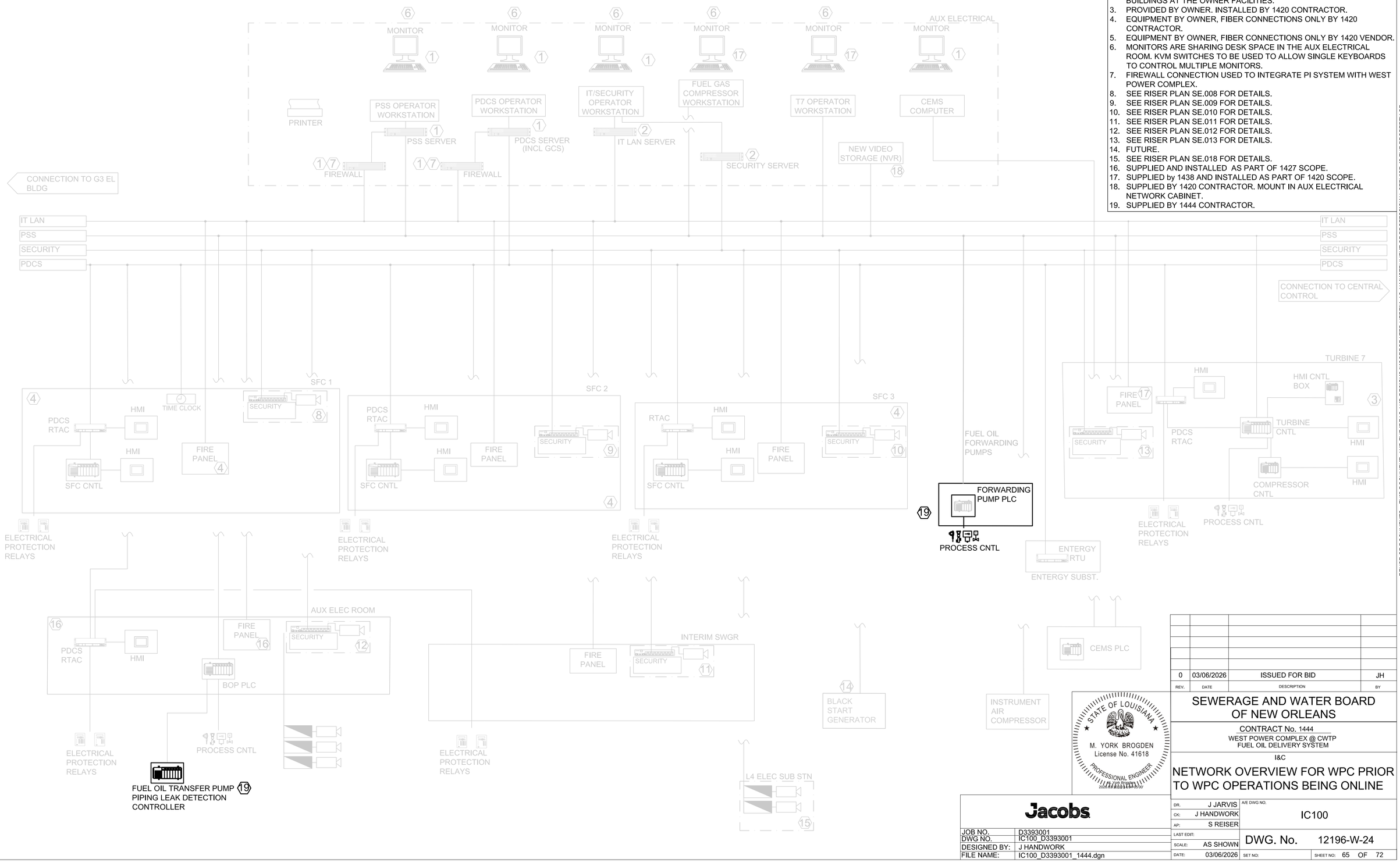

KEY NOTES

1. WORKSTATION, FIREWALLS AND SERVERS PROVIDED BY OWNER BUT INSTALLED AND PROGRAMMED BY CONTRACTOR. KEYBOARD, MOUSE AND MONITOR BY ARE PROVIDED BY CONTRACTOR.
2. IT AND SECURITY SERVER ARE EXISTING AND LOCATED IN OTHER BUILDINGS AT THE OWNER FACILITIES.
3. PROVIDED BY OWNER. INSTALLED BY 1420 CONTRACTOR.
4. EQUIPMENT BY OWNER, FIBER CONNECTIONS ONLY BY 1420 CONTRACTOR.
5. EQUIPMENT BY OWNER, FIBER CONNECTIONS ONLY BY 1420 VENDOR.
6. MONITORS ARE SHARING DESK SPACE IN THE AUX ELECTRICAL ROOM. KVM SWITCHES TO BE USED TO ALLOW SINGLE KEYBOARDS TO CONTROL MULTIPLE MONITORS.
7. FIREWALL CONNECTION USED TO INTEGRATE PI SYSTEM WITH WEST POWER COMPLEX.
8. SEE RISER PLAN SE.008 FOR DETAILS.
9. SEE RISER PLAN SE.009 FOR DETAILS.
10. SEE RISER PLAN SE.010 FOR DETAILS.
11. SEE RISER PLAN SE.011 FOR DETAILS.
12. SEE RISER PLAN SE.012 FOR DETAILS.
13. SEE RISER PLAN SE.013 FOR DETAILS.
14. FUTURE.
15. SEE RISER PLAN SE.018 FOR DETAILS.
16. SUPPLIED AND INSTALLED AS PART OF 1427 SCOPE.
17. SUPPLIED by 1438 AND INSTALLED AS PART OF 1420 SCOPE.
18. SUPPLIED BY 1420 CONTRACTOR. MOUNT IN AUX ELECTRICAL NETWORK CABINET.
19. SUPPLIED BY 1444 CONTRACTOR.

REV.	DATE	DESCRIPTION	BY
0	03/06/2026	ISSUED FOR BID	JH

M. YORK BROGDEN
License No. 41618
PROFESSIONAL ENGINEER
STATE OF LOUISIANA

SEWERAGE AND WATER BOARD OF NEW ORLEANS

CONTRACT No. 1444

WEST POWER COMPLEX @ CWTP
FUEL OIL DELIVERY SYSTEM

I&C

NETWORK OVERVIEW FOR WPC PRIOR TO WPC OPERATIONS BEING ONLINE

Jacobs

JOB NO.	D3393001
DWG NO.	IC100_D3393001
DESIGNED BY:	J HANDWORK
FILE NAME:	IC100_D3393001_1444.dgn

DR.	J JARVIS
CK:	J HANDWORK
AP:	S REISER
LAST EDIT:	
SCALE:	AS SHOWN
DATE:	03/06/2026

A/E DWG NO. IC100

DWG. No. 12196-W-24

SET NO: SHEET NO: 65 OF 72

REUSE OF DOCUMENTS: THIS DOCUMENT, AND THE IDEAS AND DESIGNS INCORPORATED HEREIN, AS AN INSTRUMENT OF PROFESSIONAL SERVICE, IS THE PROPERTY OF JACOBS AND IS NOT TO BE USED, IN WHOLE OR IN PART, FOR ANY OTHER PROJECT WITHOUT THE WRITTEN AUTHORIZATION OF JACOBS.
© JACOBS 2022. ALL RIGHTS RESERVED.

BID PACKAGE - NOT FOR CINSTRUCTION

GENERAL NOTES

1. FIBER OPTIC CONNECTION FROM CENTRAL CONTROL TO AUX ELEC ROOM AND L4 ELEC SUB STN TO AUX ELEC ROOM ARE INTENDED TO PROVIDE REDUNDANT PATHWAYS FROM THE WPC AREA TO COMMUNICATE TO THE PLANT.
2. CONNECTION OF FUEL FORWARDING PUMPS TO THE CHEMICAL TREATMENT BUILDING TO CONNECT INTO THE MAIN NETWORK IS THE CLOSEST PATH TO GET THE PUMP DATA ON THE FIBER OPTIC NETWORK THAT WILL ULTIMATELY PATCH INTO THE WPCAUX-0 AREA.

KEY NOTES

1. REFER TO DRAWING E01-40.
2. FUTURE.
3. HOLD.

WPCL4-0-NET-CAB-01
L4 ELEC. SUB STN

WPCOC0SWBNOFOPP01-D02
WPCOC0SWBNOFOPP01-D01
2
WPC OPERATIONS CENTER (FUTURE)
WPCOC-0-SWBNO-FOPP-01

3
ENTERGY SUB STN INTERFACE BOX
SSWPC0EMV60FSB01-D01
SSWPC-0-EMV60-FSB-01

WPCCTG-7-NET-CAB-01
WPCCTG7NETCAB01-D01
WPCCTG7NETCAB01-D02
TURBINE 7 PATCH PANEL

WPCCEMS0NETCAB01-D01
CEMS PANEL
WPCCEMS-0-NET-CAB-01

WPCSFC1NETCAB01-D02
WPCSFC-1-NET-CAB-01
SFC ENCL 1
WPCSFC1NETCAB01-D01

WPCSFC2NETCAB01-D01
WPCSFC2NETCAB01-D02
SFC ENCL 2
WPCSFC-2-NET-CAB-01

WPCCTG-8-NET-CAB-01
WPCCTG8NETCAB01-D01
WPCCTG8NETCAB01-D02
TURBINE 8 PATCH PANEL (FUTURE)
2

WPCCTG9NETCAB01-D01
WPCCTG9NETCAB01-D02
TURBINE 9 PATCH PANEL (FUTURE)
2
WPCCTG-9-NET-CAB-01

WPCSFC-3-NET-CAB-01
WPCSFC3NETCAB01-D01
WPCSFC3NETCAB01-D02
SFC ENCL 3

WPCAUX-T-NET-CAB-01
WPCAUXTNETCAB01-D01
WPCAUXTNETCAB01-D02
INTERIM SWITCH GEAR

WPCIAC0NETCAB01-D01
INSTRUMENT AIR COMPRESSOR
WPCIAC-0-NET-CAB-01

CCWPC0NETCAB01-D02
CCWPC0NETCAB01-D01
WPCBSG0NETCAB01-D01

AUX ELEC ROOM
PATCH PANEL
WPCAUX-0-SWBNO-FOPP-01
NET CAB
WPCAUX-NET-CAB-01
PDCS
WPCAUX-PDCS-CAB-01
WPCAUX-0-BOP-PLC-01
BOP CTRL

WPCL40NETCAB01-D01
WPCL40NETCAB01-D02

CENTRAL CONTROL
CCWPC-0-NET-CAB-01

WPCCTB0NETCAB01-D01
CHEMICAL TREATMENT BLDG
WPCCTB-0-NET-CAB-01

2
1
CWPBFS0FOFPFOPP01-D01
FUEL OIL FORWARDING PUMPS
CWPBFS-0-FOFP-FOPP-01

BLACK START GENERATOR (FUTURE)
2
WPCBSG-0-NET-CAB-01

REV.	DATE	DESCRIPTION	BY
0	03/06/2026	ISSUED FOR BID	JH

STATE OF LOUISIANA
M. YORK BROGDEN
License No. 41618
PROFESSIONAL ENGINEER
IN PRACTICE
2026.03.06 11:12:00 -05'00'

SEWERAGE AND WATER BOARD OF NEW ORLEANS

CONTRACT No. 1444

WEST POWER COMPLEX @ CWTP
FUEL OIL DELIVERY SYSTEM

I&C

ELECTRICAL DISTRIBUTION FIBER OPTIC NETWORK OVERVIEW

Jacobs

JOB NO.	D3393001
DWG NO.	IC700_D3393001
DESIGNED BY:	J HANDWORK
FILE NAME:	IC700_D3393001_1444.dgn

DR.	J JARVIS
CK:	J HANDWORK
AP:	S REISER
LAST EDIT:	
SCALE:	AS SHOWN
DATE:	03/06/2026

A/E DWG NO.
IC700

DWG. No. 12196-W-24

SET NO:
SHEET NO: 66 OF 72

© JACOBS 2022. ALL RIGHTS RESERVED.
REUSE OF DOCUMENTS: THIS DOCUMENT, AND THE IDEAS AND DESIGNS INCORPORATED HEREIN, AS AN INSTRUMENT OF PROFESSIONAL SERVICE, IS THE PROPERTY OF JACOBS AND IS NOT TO BE USED, IN WHOLE OR IN PART, FOR ANY OTHER PROJECT WITHOUT THE WRITTEN AUTHORIZATION OF JACOBS.

BID PACKAGE - NOT FOR CINSTRUCTION

KEY NOTES

1. REFERENCE POWER ENGINEERS DRAWINGS FOR DETAILS ON THE INTERCONNECTION BETWEEN THE CHEMICAL TREATMENT BUILDING AND THE FUEL OIL FORWARDING PUMP PLC.

1

FOFP FOPP

CWPBFS-0-FOTP-FOPP-01

CWPBFS0FOTPFOPP01-D01

CHEMICAL TREATMENT BLDG

WPCCTB-0-NET-CAB-01

REV.	DATE	DESCRIPTION	BY
0	03/06/2026	ISSUED FOR BID	JH

STATE OF LOUISIANA
M. YORK BROGDEN
License No. 41618
PROFESSIONAL ENGINEER
Not yet Expired
2026.03.06 14:49:05-06'00'

SEWERAGE AND WATER BOARD OF NEW ORLEANS

CONTRACT No. 1444

WEST POWER COMPLEX @ CWTP
FUEL OIL DELIVERY SYSTEM

I&C

FIBER COMMUNICATION DETAILS FOR FUEL OIL FORWARDING PUMPS

Jacobs

JOB NO.	D3393001
DWG NO.	IC702_D3393001
DESIGNED BY:	J HANDWORK
FILE NAME:	IC702_D3393001_1444.dgn

DR.	J JARVIS
CK:	J HANDWORK
AP:	S REISER
LAST EDIT:	
SCALE:	AS SHOWN
DATE:	03/06/2026

A/E DWG NO. IC702

DWG. No. 12196-W-24

SET NO:

SHEET NO: 67 OF 72

© JACOBS 2022. ALL RIGHTS RESERVED.
REUSE OF DOCUMENTS: THIS DOCUMENT, AND THE IDEAS AND DESIGNS INCORPORATED HEREIN, AS AN INSTRUMENT OF PROFESSIONAL SERVICE, IS THE PROPERTY OF JACOBS AND IS NOT TO BE USED, IN WHOLE OR IN PART, FOR ANY OTHER PROJECT WITHOUT THE WRITTEN AUTHORIZATION OF JACOBS.

BID PACKAGE - NOT FOR CINSTRUCTION

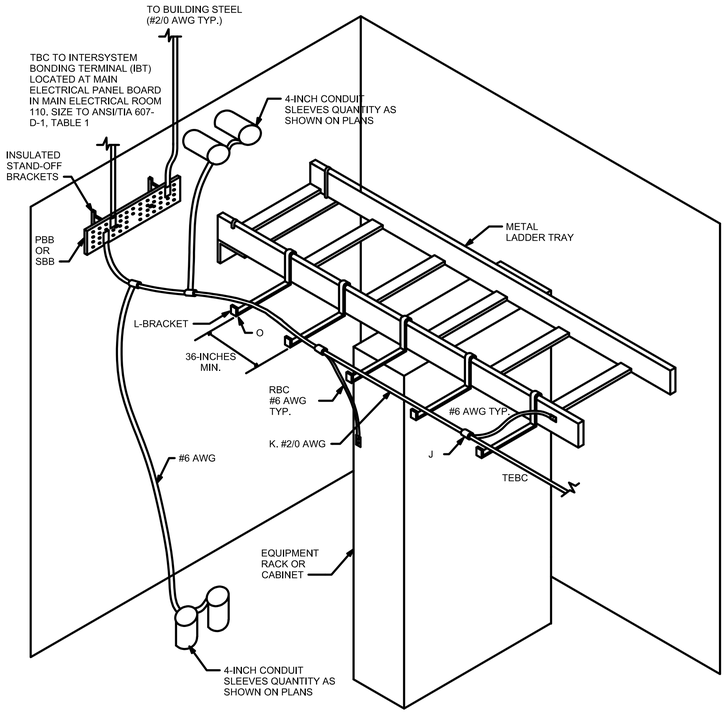

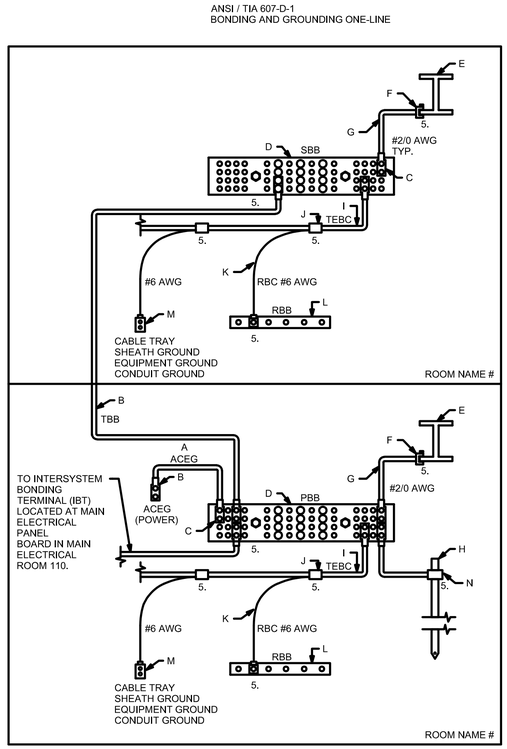

GENERAL NOTES

1. COMPLY WITH ANSI/TIA-607-D-1 6.2.1 FOR PBB'S.
2. COMPLY WITH ANSI/TIA-607-D-1 6.2.1 FOR RBB'S.
3. SIZE TBB/BBC CONDUCTORS TO ANSI / TIA-607-D-1, TABLE 1, UON, CONDUCTORS SHALL BE THE SAME SIZE WHEN CONNECTED.
4. BONDING CONNECTIONS ARE EITHER LISTED EXOTHERMIC WELDS,LISTED IRREVERSIBLE CONNECTORS, OR LISTED MECHANICAL CONNECTORS. CONNECTORS, LUGS, AND COMPONENTS SHALL BE LISTED FOR THE PURPOSE.

KEY NOTES

A. IF PANELBOARD IS LOCATED IN SAME SPACE, BOND PBB TO ACEG BUS. MAINTAIN 12-INCHES SEPARATION. THE TBC CONDUCTOR BONDING TO THE ELECTRICAL PANEL SHALL BE NO SMALLER THAN THE LARGEST TBB.

B. THIS CONDUCTOR SHALL BE CONTINUOUS AND AS SHORT AS POSSIBLE IN A STRAIGHT-LINE PATH. SIZE TBB BY TPTIA-607-D-1 TABLE 1.

C. UTILIZE EXOTHERMIC WELDING OR LISTED TWO-HOLE COMPRESSION LUGS FOR CONNECTIONS TO THE PBB/SBB.

D. PBB OR SBB, SEE GENERAL NOTES ABOVE FOR REQUIREMENTS.

E. BUILDING STEEL (STRUCTURAL METAL) VERIFIED ELECTRONICALLY CONTINUOUS VIA TWO-POINT TEST OR EQUIPMENT.

F. LISTED BONDING CONNECTOR. LISTED EXOTHERMIC, COMPRESSION, OR MECHANICAL CONNECTION.

G. SIZE THIS BONDING CONDUCTOR TO TIA 607-D-1, TABLE 1, THIS CONDUCTOR SHALLBE NO SMALLER THAN ANY OTHER CONDUCTOR IN THE TELECOM BONDING BACKBONE SYSTEM. USE #2/0 AWG, UNLESS OTHERWISE NOTED.

H. MINIMUM GROUND ELECTRODE SHALL BE 3/4-INCH DIAMETER BY 8'-0" LONG WITH A 1/2-INCH COPPER PLATING THICKNESS, BURIED 24-INCHES FOR A SUM OF 10'-0" DRIVEN DEPTH.

I. SIZE TEBC TO LARGEST-SIZE GROUNDING CONDUCTOR. USE #2/0 AWG, UNLESS OTHERWISE NOTED.

J. USE IRREVERSIBLE COMPRESSION CONNECTORS TO BOND TEBC TO RBC'S OR OTHER GROUNDING CONDUCTORS.

K. USE #6 AWG AS A MINIMUM RBC SIZE, UNLESS OTHERWISE NOTED.

L. WHEN USING RBBS, SEE GENERAL NOTES ABOVE FOR REQUIREMENTS.

M. BOND EQUIPMENT TO TEBC VIA IRREVERSIBLE COMPRESSION CONNECTORS AND #6 AWG.

N. BOND GROUND CABLE TO GROUND ELECTRODE.

O. STAND-OFF BRACKET SHALL MAINTAIN SEPARATION (MINIMUM 2-INCHES) FROM OTHER CABLE SPACE BRACKETS NO GREATER THAN 36-INCHES CENTER TO CENTER.

REUSE OF DOCUMENTS: THIS DOCUMENT AND THE IDEAS AND DESIGNS INCORPORATED HEREIN, AS AN INSTRUMENT OF PROFESSIONAL SERVICE, IS THE PROPERTY OF JACOBS; AND IS NOT TO BE USED, IN WHOLE OR IN PART, FOR ANY OTHER PROJECT WITHOUT THE WRITTEN AUTHORIZATION OF JACOBS. © JACOBS 2022. ALL RIGHTS RESERVED.

BID PACKAGE - NOT FOR CINSTRUCTION

REV.	DATE	DESCRIPTION	BY
0	03/06/2026	ISSUED FOR BID	JH

STATE OF LOUISIANA
M. YORK BROGDEN
License No. 41618
PROFESSIONAL ENGINEER
IN RESPONSIBLE CHARGE

SEWERAGE AND WATER BOARD OF NEW ORLEANS

CONTRACT No. 1444

WEST POWER COMPLEX @ CWTP
FUEL OIL DELIVERY SYSTEM

I&C

GROUNDING AND BONDING DETAIL

Jacobs

JOB NO.	D3393001
DWG NO.	IC711_D3393001
DESIGNED BY:	J HANDWORK
FILE NAME:	IC711_D3393001_1444.dgn

DR.	J JARVIS
CK:	J HANDWORK
AP:	S REISER
LAST EDIT:	
SCALE:	AS SHOWN
DATE:	03/06/2026

A/E DWG NO.
IC711

DWG. No. 12196-W-24

SET NO:

SHEET NO: 68 OF 72

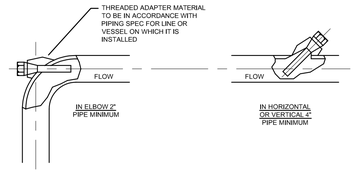

NOTES:

A. FOR INSTALLATION IN PIPE SIZES BELOW MINIMUM SHOWN, INCREASE PIPE TO MINIMUM LOCALLY OR INSTALL IN ELBOW OR TEE.
B. SADDLE TYPE WELDING FITTINGS ON VESSELS SHALL MEET PIPE OR VESSEL SPECIFICATIONS.
C. PLUG TO BE INSERTED IN ADAPTER TO PREVENT DISTORTION WHEN WELDING.
D. CHECK THERMOWELL LENGTH BEFORE LOCATING.
E. FOR PIPE SMALLER THAN 2" ADD REDUCERS TO KEEP 2" PIPE IN ELBOW CONNECTION.

THERMOWELL INSERTION LENGTH			
INSTALLATION	PIPE SIZE	U DIMENSION	NOTES
IN ELBOW	2" & SMALLER	4 1/2"	SWAG UP TO 2"
	3"-6"	7 1/2"	
	>6"	10 1/2"	
PERPENDICULAR INTO PIPE	<6"	-	INSTALL IN ELBOW
	6"	4 1/2"	PREFERRED INSTALLATION IS IN ELBOW DUE TO VELOCITY CONSIDERATIONS
	8"	4 1/2"	
	10"-12"	7 1/2"	
	>12"	10 1/2"	

THERMOWELL

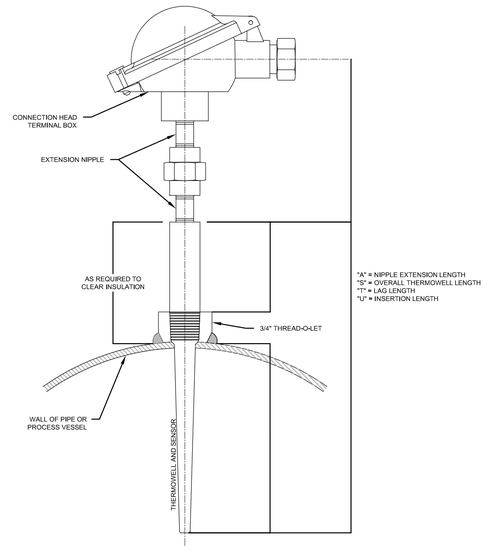

NOTES:

1. 'U' DIMENSION PER THERMOWELL INSERTION LENGTH TABLE IN IC502, DETAIL 1.
2. 'T' DIMENSION TO BE CALCULATED PER INSULATION LAG NEEDED TO EXTEND THE WELL BEYOND THE PIPE INSULATION.

RESISTANCE TEMPERATURE DETECTOR

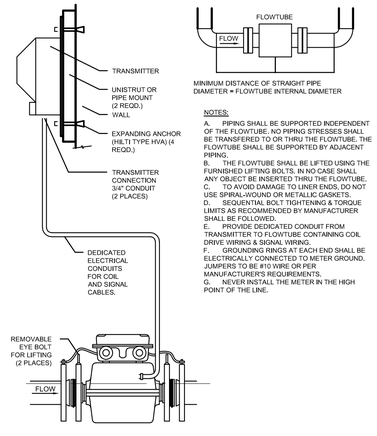

MINIMUM DISTANCE OF STRAIGHT PIPE DIAMETER = FLOWTUBE INTERNAL DIAMETER

NOTES:

A. PIPING SHALL BE SUPPORTED INDEPENDENT OF THE FLOWTUBE. NO PIPING STRESSES SHALL BE TRANSFERED TO OR THRU THE FLOWTUBE. THE FLOWTUBE SHALL BE SUPPORTED BY ADJACENT PIPING.
B. THE FLOWTUBE SHALL BE LIFTED USING THE FURNISHED LIFTING BOLTS. IN NO CASE SHALL ANY OBJECT BE INSERTED THRU THE FLOWTUBE.
C. TO AVOID DAMAGE TO LINER ENDS, DO NOT USE SPIRAL-WOUND OR METALLIC GASKETS.
D. SEQUENTIAL BOLT TIGHTENING & TORQUE LIMITS AS RECOMMENDED BY MANUFACTURER SHALL BE FOLLOWED.
E. PROVIDE DEDICATED CONDUIT FROM TRANSMITTER TO FLOWTUBE CONTAINING COIL DRIVE WIRING & SIGNAL WIRING.
F. GROUNDING RINGS AT EACH END SHALL BE ELECTRICALLY CONNECTED TO METER GROUND. JUMPERS TO BE #10 WIRE OR PER MANUFACTURER'S REQUIREMENTS.
G. NEVER INSTALL THE METER IN THE HIGH POINT OF THE LINE.

KEYED NOTES:

1. IF FLOWTUBE IS TO BE INSTALLED IN VERTICAL LINE, FLUID SHALL FLOW UP INTO TUBE TO MAINTAIN A FLOODED STATE.

FLOW METER - ELECTROMAGNETIC

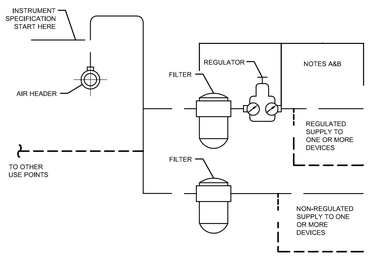

NOTES:

A. ALL TUBING SHALL BE 3/8" O.D, S,S, OR AS OTHERWISE SPECIFIED.
B. TUBING FOR PISTON ACTUATED VALVES SHALL BE 1/2" O.D, S,S.
C. ALL TUBE FITTINGS SHALL BE 316 SS UNLESS OTHERWISE SPECIFIED.

MAXIMUM NUMBER OF TAKE-OFFS FOR INSTRUMENT SUPPLY					
DEVICE TYPE		PIPE SIZE			
		1/2"	3/4"	1"	
TRANSMITTERS TRANSDUCERS LOCAL CONTROLLERS		6	12	24	
CONTROL VALVE OPERATORS	DIAPHRAGM	4	8	16	
	PISTON	3	6	12	
CONTROL DEVICES		3	6	12	

INSTRUMENT AIR SUPPLY INSTALLATION GUIDE

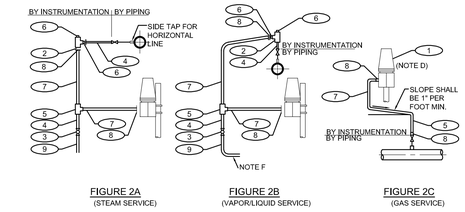

FIGURE 2A (STEAM SERVICE)
FIGURE 2B (VAPOR/LIQUID SERVICE)
FIGURE 2C (GAS SERVICE)

LIST OF MATERIALS				
ITEM	FIG 2A QTY	FIG 2B QTY	FIG 2C QTY	DESCRIPTION
1	1	1	1	PRESSURE TRANSMITTER
2	1	1	-	1/2" FEMALE CROSS
3	1	1	-	1/2" NPT BALL VALVE
4	2	2	-	1/2" SHORT NIPPLE
5	1	1	-	FEMALE RUN TEE 1/2" NPT x 1/2" TUBE
6	2	2	-	1/2" PLUG
7	A/R	A/R	A/R	TUBING 1/2" O.D
8	2	2	2	MALE CONNECTOR, 1/2" NPT x 1/2" TUBE
9	A/R	A/R	-	1/2" PIPE

NOTES:

A. HORIZONTAL TUBING FROM TAP TO TRANSMITTER SHALL HAVE CONTINUOUS OF SLOPE NO LESS THAN 1" PER FT. TOWARD TRANSMITTER. DO NOT POCKET TUBING RUN.
B. ROUTE BLOWDOWN LINES TO WITHIN 6" OF FLOOR AND ANCHOR SECURELY NEAR END OF TUBING/PIPING.
C. USE 316 SS MATERIALS UNLESS OTHERWISE NOTED. THEN MATERIAL SHALL CONFORM TO THOSE SPECIFIED IN THE APPROPRIATE AND PIPING CLASSIFICATION STANDARDS.
D. MOUNT TRANSMITTER IN ACCESSIBLE LOCATION. FREE FROM VIBRATION, MOISTURE AND HIGH TEMPERATURE.
E. THE IMPULSE LINE SHALL BE FULL OF CONDENSATE, THEREFORE THE DIFFERENCE IN ELEVATION MAY ALTER THE CALIBRATION. (SUPPRESSED/ELEVATE ZERO). THEREFORE MINIMAZE THE DIFFERENCE BETWEEN THE TRANSMITTER AND THE PROCESS TAP.
F. BEND BLOWDOWN PIPING BACKWARDS OPPOSITE THE HANDLE OF MANUAL VALVE.

PRESSURE TRANSMITTER

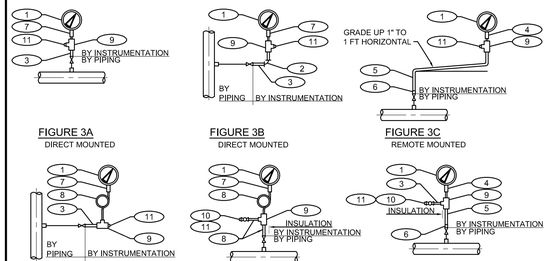

FIGURE 3A DIRECT MOUNTED
FIGURE 3B DIRECT MOUNTED
FIGURE 3C REMOTE MOUNTED
FIGURE 3D DIRECT MOUNTED
FIGURE 3E DIRECT MOUNTED STEAM SERVICE
FIGURE 3F REMOTE MOUNTED STEAM SERVICE

LIST OF MATERIALS		
ITEM	QTY	DESCRIPTION
1	1	PRESSURE GAUGE
2	A/R	1/2" FEMALE ELBOW
3	A/R	1/2" SHORT NIPPLE
4	A/R	1/2" TUBE x 1/4" OR 1/2" NPT CONNECTION
5	A/R	TUBING 1/2" O.D
6	A/R	MALE, CONNECTOR 1/2" NPT x 1/2" TUBE
7	A/R	1/2" COUPLING OR 1/2" NPT x 1/4" NPT REDUCER
8	A/R	PIGTAIL OR SIPHON
9	A/R	1/2" FEMALE TEE
10	A/R	1/2" BALL VALVE
11	A/R	1/2" PIPE PLUG

NOTES:

A. PIPE, FITTINGS & TUBING SHALL CONFORM WITH MECHANICAL STANDARDS FOR SERVICE CONDITIONS SPECIFIED.
B. CONNECTING TUBING SHALL BE SUPPORTED ON BRACKETS OR HANGERS RIGIDLY FASTENED TO WALLS OR STRUCTURAL MEMBERS.
C. USE 316 SS MATERIALS UNLESS OTHERWISE NOTED. THEN MATERIAL SHALL CONFORM TO THOSE SPECIFIED IN THE APPROPRIATE AND PIPING CLASSIFICATION STANDARDS.
D. INSULATION & MATERIAL SHALL MEET THE REQUIREMENTS OF THE SPECIFICATION SECTION PIPING INSULATION TYPES H OR C.

PRESSURE GAUGE

REV.	DATE	DESCRIPTION	BY
0	03/06/2026	ISSUED FOR BID	JH

STATE OF LOUISIANA
M. YORK BROGDEN
License No. 41618
PROFESSIONAL ENGINEER
Not Valid Without Digital Signature
2024.07.31 11:43:43 -05'00'

SEWERAGE AND WATER BOARD OF NEW ORLEANS

CONTRACT No. 1444

WEST POWER COMPLEX @ CWTP
FUEL OIL DELIVERY SYSTEM

I&C

STANDARD DETAILS

Jacobs

JOB NO.	D3393001
DWG NO.	IC712_D3393001
DESIGNED BY:	J HANDWORK
FILE NAME:	IC712_D3393001_1444.dgn

DR.	J JARVIS
CK:	J HANDWORK
AP:	S REISER
LAST EDIT:	02/23/2024
SCALE:	AS SHOWN
DATE:	03/06/2026

A/E DWG NO. IC712

DWG. No. 12196-W-24

SET NO: SHEET NO: 69 OF 72

© JACOBS 2022. ALL RIGHTS RESERVED.
REUSE OF DOCUMENTS: THIS DOCUMENT, AND THE IDEAS AND DESIGNS INCORPORATED HEREIN, AS AN INSTRUMENT OF PROFESSIONAL SERVICE IS THE PROPERTY OF JACOBS AND IS NOT TO BE USED, IN WHOLE OR IN PART, FOR ANY OTHER PROJECT WITHOUT THE WRITTEN AUTHORIZATION OF JACOBS.

BID PACKAGE - NOT FOR CINSTRUCTION

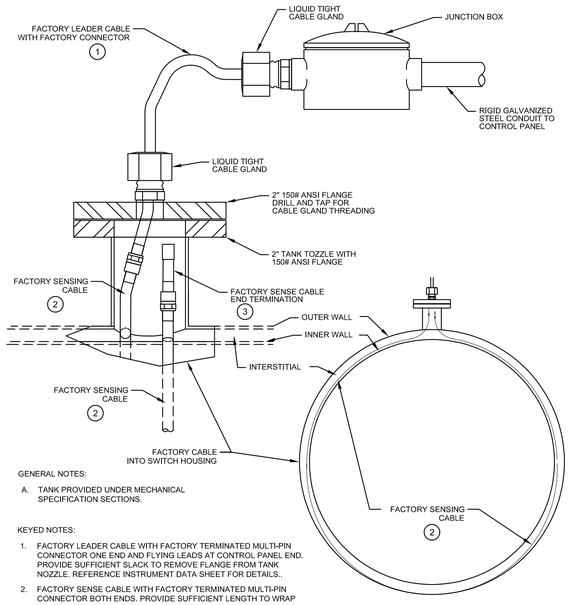

GENERAL NOTES:

A. TANK PROVIDED UNDER MECHANICAL SPECIFICATION SECTIONS.

KEYED NOTES:

1. FACTORY LEADER CABLE WITH FACTORY TERMINATED MULTI-PIN CONNECTOR ONE END AND FLYING LEADS AT CONTROL PANEL END. PROVIDE SUFFICIENT SLACK TO REMOVE FLANGE FROM TANK NOZZLE. REFERENCE INSTRUMENT DATA SHEET FOR DETAILS.
2. FACTORY SENSE CABLE WITH FACTORY TERMINATED MULTI-PIN CONNECTOR BOTH ENDS. PROVIDE SUFFICIENT LENGTH TO WRAP AROUND THE INNER TANK WALL CIRCUMFERENCE WITH SLACK TO LAY FREELY ON THE BOTTOM OF THE TANK INTERSTITIAL. COIL EXTRA SENSE CABLE LENGTH INSIDE TANK NOZZLE AND PREVENT SENSE CABLE FROM SLIDING TO TANK BOTTOM INTERSTITIAL. REFERENCE INSTRUMENT DATA SHEET FOR DETAILS.
3. FACTORY SENSE CABLE END TERMINATION WITH FACTORY TERMINATED MULTI-PIN CONNECTOR ONE END. COIL EXTRA LENGTH OF CABLE INSIDE TANK NOZZLE AND PREVENT SENSE CABLE FROM SLIDING TO TANK BOTTOM INTERSTITIAL.

DOUBLE WALLED TANK INTERSTITIAL LEAK DETECTION TABLE

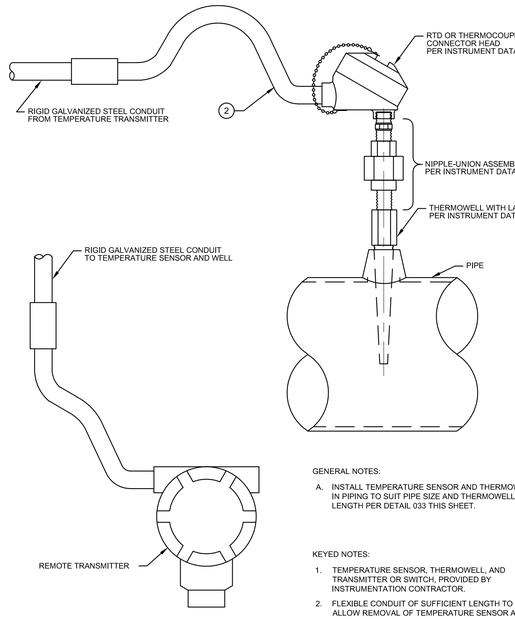

GENERAL NOTES:

A. INSTALL TEMPERATURE SENSOR AND THERMOWELL IN PIPING TO SUIT PIPE SIZE AND THERMOWELL LENGTH PER DETAIL 033 THIS SHEET.

KEYED NOTES:

1. TEMPERATURE SENSOR, THERMOWELL, AND TRANSMITTER OR SWITCH, PROVIDED BY INSTRUMENTATION CONTRACTOR.
2. FLEXIBLE CONDUIT OF SUFFICIENT LENGTH TO ALLOW REMOVAL OF TEMPERATURE SENSOR AND HEAD FROM THERMOWELL WITHOUT DISCONNECTING WIRING FOR MAINTENANCE ACTIVITIES.

REMOTE TEMPERATURE TRANSMITTER OR SWITCH MOUNTED IN PIPE

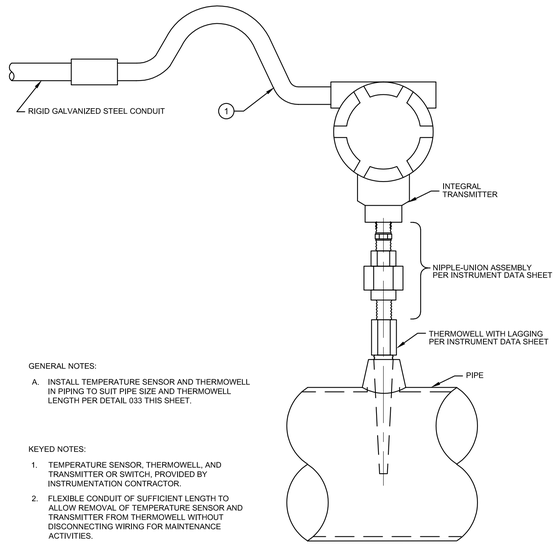

GENERAL NOTES:

A. INSTALL TEMPERATURE SENSOR AND THERMOWELL IN PIPING TO SUIT PIPE SIZE AND THERMOWELL LENGTH PER DETAIL 033 THIS SHEET.

KEYED NOTES:

1. TEMPERATURE SENSOR, THERMOWELL, AND TRANSMITTER OR SWITCH, PROVIDED BY INSTRUMENTATION CONTRACTOR.
2. FLEXIBLE CONDUIT OF SUFFICIENT LENGTH TO ALLOW REMOVAL OF TEMPERATURE SENSOR AND TRANSMITTER FROM THERMOWELL WITHOUT DISCONNECTING WIRING FOR MAINTENANCE ACTIVITIES.

INTEGRAL TEMPERATURE TRANSMITTER OR SWITCH MOUNTED IN PIPE

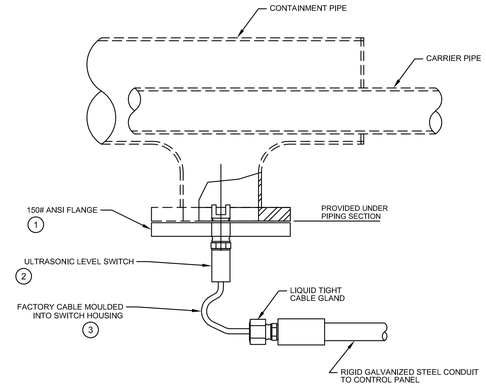

KEYED NOTES:

1. CONTRACTOR SHALL VERIFY PIPING FLANGE SIZE PRIOR TO INSTRUMENT MOUNTING FLANGE. PROCUREMENT AND INSTALLATION. FLANGE TO BE DRILLED AND TAPPED TO CONFORM WITH INSTRUMENT CONNECTION.
2. REFERENCE INSTRUMENT DATA SHEET FOR INSTRUMENT DETAILS.
3. INSTRUMENT FLYING LEADS OF SUFFICIENT LENGTH SHALL ALLOW REMOVAL OF LEVEL SENSOR FROM MOUNTING FLANGE WITHOUT DISCONNECTING WIRING FOR MAINTENANCE ACTIVITIES.

PIPE CONTAINMENT LEAK SWITCH

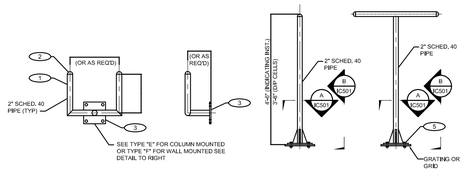

FIGURE 1A
WALL OR COLUMN MOUNTED PIPE STAND FOR TWO INSTRUMENTS (CONFIRM DIMENSIONS PRIOR TO FABRICATION)

FIGURE 1B
ONE INSTRUMENT FLOOR MOUNTED PIPE STANDS ON GRATING

FIGURE 1C
TWO INSTRUMENTS FLOOR MOUNTED PIPE STANDS ON GRATING

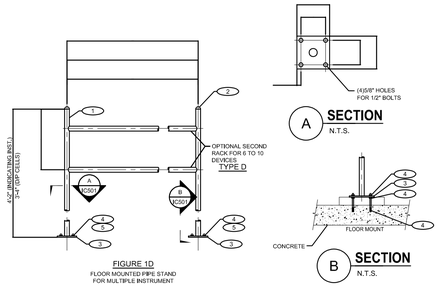

FIGURE 1D
FLOOR MOUNTED PIPE STAND FOR MULTIPLE INSTRUMENT

LIST OF MATERIALS		
ITEM	QTY	DESCRIPTION
1	A/R	PIPE, 2" NOM, x SCH 40, ASTM A53 C.S.
2	A/R	WELD CAP, 2" NOM, x SCH 40, ASTM A234, C.S.
3	1	10"x10"x3/8" BASE PLATE, ASTM A36, C.S.
4	A/R	PHILLIPS S-12 ANCHORS OR EQ, W/ 1/2" BOLTS (4), NUTS & WASHERS
5	A/R	1/2" BOLTS, NUTS AND WASHERS, LENGTH TO SUIT

NOTES:

A. PRIOR TO STAND MOUNTING, PAINT OR GALVANIZE TO AREA BUILDING SPECIFICATIONS. IF GALVANIZED, GALVANIZE AFTER FABRICATION. NO FIELD PAINTING OVER WELDS OR CUT ENDS.

B. USE WALL OR COLUMN MOUNTED TYPE OF SUPPORT IN PREFERENCE TO FLOOR MOUNTED TYPES WHERE PRACTICAL.

C. DO NOT USE EXPANSION BOLTS, USE ALL-THREAD WITH EPOXY ADHESIVE IN EXTERIOR LOCATIONS. USE GALVANIZED ALL-THREAD, NUTS, AND WASHERS.

PIPE STANDS

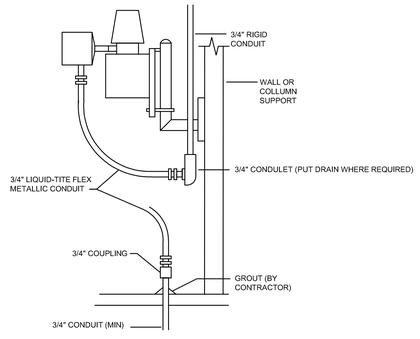

CONDUIT TERMINATION AT INSTRUMENT

© JACOBS 2022. ALL RIGHTS RESERVED.
REUSE OF DOCUMENTS: THIS DOCUMENT, AND THE IDEAS AND DESIGNS INCORPORATED HEREIN, AS AN INSTRUMENT OF PROFESSIONAL SERVICE, IS THE PROPERTY OF JACOBS AND IS NOT TO BE USED, IN WHOLE OR IN PART, FOR ANY OTHER PROJECT WITHOUT THE WRITTEN AUTHORIZATION OF JACOBS.

BID PACKAGE - NOT FOR CINSTRUCTION

REV.	DATE	DESCRIPTION	BY
0	03/06/2026	ISSUED FOR BID	JH

STATE OF LOUISIANA
M. YORK BROGDEN
License No. 41618
PROFESSIONAL ENGINEER
My [illegible]
2026-03-06 13:39:20 -05'00'

SEWERAGE AND WATER BOARD OF NEW ORLEANS

CONTRACT No. 1444

WEST POWER COMPLEX @ CWTP
FUEL OIL DELIVERY SYSTEM

I&C

STANDARD DETAILS

Jacobs

JOB NO.	D3393001
DWG NO.	IC713_D3393001
DESIGNED BY:	J HANDWORK
FILE NAME:	IC713_D3393001_1444.dgn

DR.	J JARVIS
CK:	J HANDWORK
AP:	S REISER
LAST EDIT:	
SCALE:	AS SHOWN
DATE:	03/06/2026

A/E DWG NO. IC713

DWG. No. 12196-W-24

SET NO:

SHEET NO: 70 OF 72

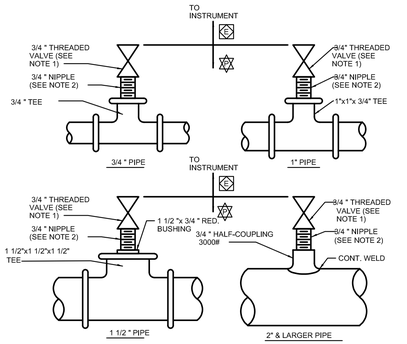

NOTES
1. VALVE TYPE SHALL BE BALL VALVE OR PLUG VALVE PER PIPING SPECIFICATIONS.
2. VALVE AND NIPPLE MATERIAL SHALL BE PER PIPING SPECIFICATIONS.
3. UTILIZED WITH FLUIDS LESS THAN 50 CP VISCOSITY. NOTE THAT FOR FLUIDS OVER 10 CP VISCOSITY OR WITH A Ph LESS THAN 4.5 OR GREATER THAN 9.0, A DIAPHRAGM SEAL WILL BE UTILIZED. SEE DETAIL ID-103H.
4. REFER TO ID-000 FOR INSTALLATION SYMBOLS.
5. FOR NATURAL GAS INSTALLATIONS, PIPING SHALL BE FULLY WELDED, THREADS ARE NOT ALLOWED. REFERENCE PIPING SPECIFICATIONS.

PRESSURE MEASUREMENT PROCESS CONNECTION (STRT. PIPE W/ISO. VALVE)

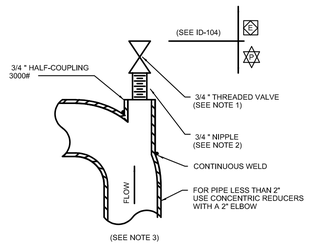

NOTES
1. VALVE TYPE SHALL BE BALL VALVE OR PLUG VALVE PER PIPING SPECIFICATION.
2. VALVE AND NIPPLE MATERIAL SHALL BE PER PIPING SPECIFICATIONS.
3. THIS TYPE OF PRESSURE CONNECTION WILL NOT BE UTILIZED WITH FLUIDS HAVING SPECIFIC GRAVITY GREATER THAN 1.2 OR VISCOSITY GREATER THAN 10CP.
4. REFER TO ID-000 FOR INSTALLATION SYMBOLS.
5. FOR NATURAL GAS INSTALLATIONS, PIPING SHALL BE FULLY WELDED, THREADS ARE NOT ALLOWED. REFERENCE PIPING SPECIFICATIONS.

PRESSURE MEASUREMENT PROCESS CONNECTION (PIPE ELBOW W/ISO. VALVE)

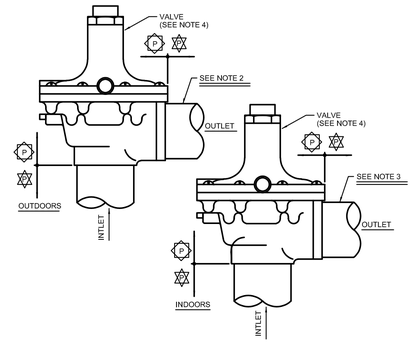

NOTES
1. REFER TO ID-000 FOR INSTALLATION SYMBOLS.
2. OUTDOOR APPLICATIONS REQUIRE U-NECK IN PIPING TURNED DOWN WITH ELEVATION OF MIN. 20 FT. ABOVE GRADE AND A BIRD SCREEN COVERING END OF PIPE. IF ELEVATION IS LESS THAN 20 FT. OUTLET PIPE SHALL BE RUN TO NEAREST PROCESS DRAIN.
3. INDOOR APPLICATIONS REQUIRE U-NECK IN PIPING TURNED DOWN AND PIPE RUN TO NEAREST PROCESS DRAIN.
4. VALVE MOUNTED WITH INLET DOWN & OUTLET HORIZONTAL.

SAFETY RELIEF VALVE

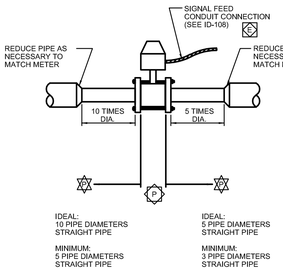

NOTES
1. REFER TO ID-000 FOR INSTALLATION SYMBOLS.
2. LOCAL MOUNT TRANSMITTER.

FLOW METER - VORTEX

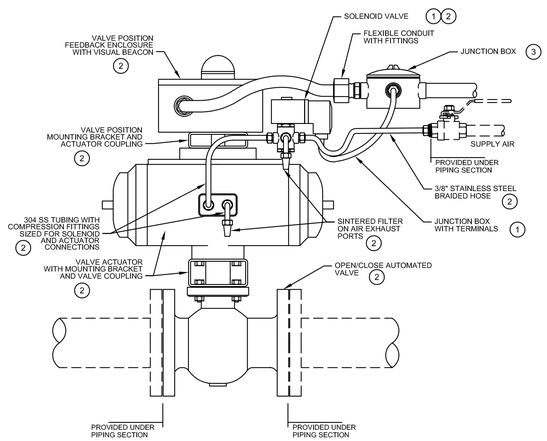

GENERAL NOTES:

A. MAINTAIN SUFFICIENT SLACK ON ALL FLEXIBLE CONDUIT, HOSE, AND CORD SETS TO ELIMINATE STRESS ON VALVE ASSEMBLY CONNECTION POINTS.

KEYED NOTES:

1. SOLENOID AND SURGE SUPPRESSION WITH CORD SET PER INSTRUMENT DATA SHEET. REFERENCE DETAIL 041 THIS SHEET.
2. PROVIDED WITH OPEN/CLOSE VALVE ASSEMBLY, REFERENCE DATA SHEET FOR REQUIRED COMPONENTS.
3. JUNCTION BOX WITH TERMINALS REFERENCE DETAIL 041 THIS SHEET.

OPEN/CLOSE AUTOMATED VALVE ASSEMBLY

REV.	DATE	DESCRIPTION	BY
0	03/06/2026	ISSUED FOR BID	JH

STATE OF LOUISIANA
M. YORK BROGDEN
License No. 41618
PROFESSIONAL ENGINEER

SEWERAGE AND WATER BOARD OF NEW ORLEANS

CONTRACT No. 1444

WEST POWER COMPLEX @ CWTP
FUEL OIL DELIVERY SYSTEM

I&C

STANDARD DETAILS

Jacobs

JOB NO.	D3393001
DWG NO.	IC714_D3393001
DESIGNED BY:	J HANDWORK
FILE NAME:	IC714_D3393001_1444.dgn

DR.	J JARVIS
CK:	J HANDWORK
AP:	S REISER
LAST EDIT:	
SCALE:	AS SHOWN
DATE:	03/06/2026

A/E DWG NO. IC714

DWG. No. 12194-W-24

SET NO: SHEET NO: 71 OF 72

BID PACKAGE - NOT FOR CINSTRUCTION

REUSE OF DOCUMENTS: THIS DOCUMENT, AND THE IDEAS AND DESIGNS INCORPORATED HEREIN, AS AN INSTRUMENT OF PROFESSIONAL SERVICE, IS THE PROPERTY OF JACOBS AND IS NOT TO BE USED, IN WHOLE OR IN PART, FOR ANY OTHER PROJECT WITHOUT THE WRITTEN AUTHORIZATION OF JACOBS. © JACOBS 2022. ALL RIGHTS RESERVED.

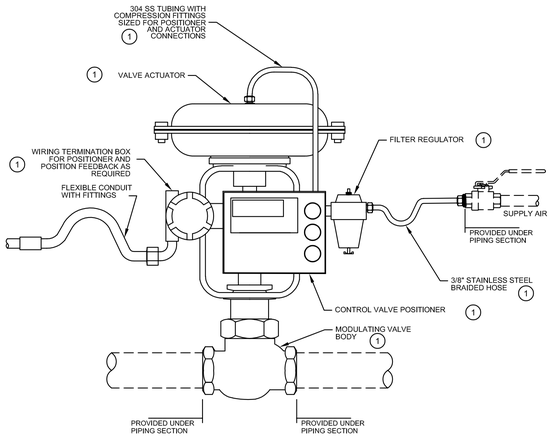

GENERAL NOTES:

A. MAINTAIN SUFFICIENT SLACK ON ALL FLEXIBLE CONDUIT AND HOSE TO ELIMINATE STRESS ON VALVE ASSEMBLY CONNECTION POINTS.

KEYED NOTES:

1. PROVIDED WITH MODULATING CONTROL VALVE ASSEMBLY, REFERENCE DATA SHEET FOR REQUIRED COMPONENTS.

CONTROL VALVE ASSEMBLY

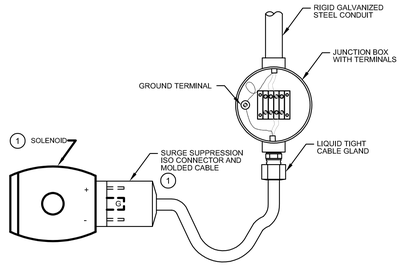

GENERAL NOTES:

A. MAINTAIN SUFFICIENT SLACK IN CORD SET TO ELIMINATE STRESS ON CONNECTOR TO SOLENOID VALVE DIN CONNECTION.

KEYED NOTES:

1. SOLENOID AND SURGE SUPPRESSION CORD SET PER INSTRUMENT DATA SHEET.

SOLENOID VALVE CONNECTIONS

LIST OF MATERIALS		
ITEM	QTY	DESCRIPTION
1	4	1/2" ODT x 3/4" NPT MALE CONNECTOR
2	A/R	1/2" OD x .035" WALL, A213, GRADE TP316
3	2	1/2" UNION TEE, 316 SS
4	4	1/2" VALVE, 316 SS
5	1	1/2" FNPT 3-VALVE MANIFOLD, 316 SS (Supplied with Inst.)
6	2	1/2" OD TUBING CAP, 316 SS
7	2	1/2" ODT x 1/2" NPT MALE CONNECTOR

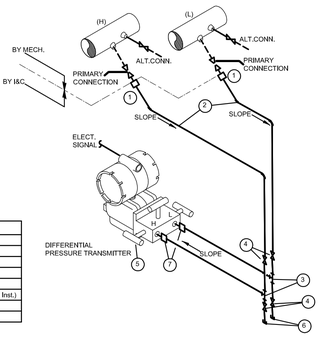

DIFFERENTIAL PRESSURE TRANSMITTER

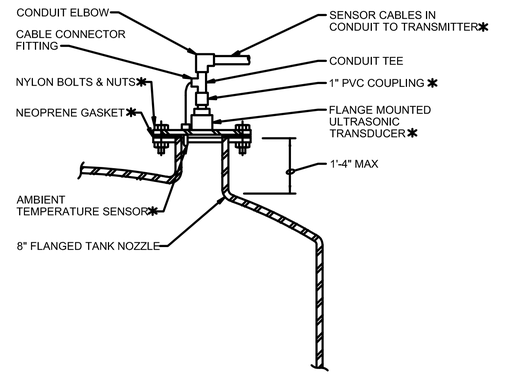

ULTRASONIC LEVEL TRANSMITTER

© JACOBS 2022. ALL RIGHTS RESERVED.
REUSE OF DOCUMENTS: THIS DOCUMENT, AND THE IDEAS AND DESIGNS INCORPORATED HEREIN, AS AN INSTRUMENT OF PROFESSIONAL SERVICE, IS THE PROPERTY OF JACOBS AND IS NOT TO BE USED, IN WHOLE OR IN PART, FOR ANY OTHER PROJECT WITHOUT THE WRITTEN AUTHORIZATION OF JACOBS.

BID PACKAGE - NOT FOR CINSTRUCTION

REV.	DATE	DESCRIPTION	BY
0	03/06/2026	ISSUED FOR BID	JH

STATE OF LOUISIANA
M. YORK BROGDEN
License No. 41618
PROFESSIONAL ENGINEER
2026.03.06 11:09:00

SEWERAGE AND WATER BOARD OF NEW ORLEANS

CONTRACT No. 1444

WEST POWER COMPLEX @ CWTP
FUEL OIL DELIVERY SYSTEM

I&C

STANDARD DETAILS

Jacobs

JOB NO.	D3393001
DWG NO.	IC715_D3393001
DESIGNED BY:	J HANDWORK
FILE NAME:	IC715_D3393001_1444.dgn

DR.	J JARVIS
CK:	J HANDWORK
AP:	S REISER
LAST EDIT:	
SCALE:	AS SHOWN
DATE:	03/06/2026

A/E DWG NO. IC715

DWG. No. 12196-W-24

SET NO:

SHEET NO: 72 OF 72

SEWERAGE and WATER BOARD

of

NEW ORLEANS

VOLUME 4

STANDARD AND REFERENCE DRAWINGS

OF THE

CONTRACT DOCUMENTS

FOR

CONTRACT 1444

WEST POWER COMPLEX @ CWTP

FUEL OIL DELIVERY SYSTEM

Issued for Bid

August 2026

INDEX OF CONTRACT DOCUMENTS
FOR
CONTRACT 1444
WEST POWER COMPLEX @ CWTP
FUEL OIL DELIVERY SYSTEM

VOLUME 4	NO. OF SHEETS	REFERENCE DRAWINGS
1757 P11	1	UNDERGROUND UTILITIES AT CARROLLTON PLANT
1757 P30	1	UNDERGROUND UTILITIES AT CARROLLTON PLANT
4173 P4	1	CONTRACT 1095 INSTALLATION OF HIGH VOLTAGE CABLE FOR BASINS L3 AND L4
8818-W24	1	PLAN OF WATER PURIFICATION PLAN SHEET NO.18
8826-W24	1	PLAN OF WATER PURIFICATION PLAN SHEET NO.26
8827-W24	1	PLAN OF WATER PURIFICATION PLAN SHEET NO.27
8828-W24	1	PLAN OF WATER PURIFICATION PLAN SHEET NO.28
8829-W24	1	PLAN OF WATER PURIFICATION PLAN SHEET NO.29
8830-W24	1	PLAN OF WATER PURIFICATION PLAN SHEET NO.30
100162	8	SUBSURFACE UTILIY ENGINEERING MAP (SJB GROUP PROJECT NO. 100162.00_
N/A	1	SJB SURVEY BASE DRAWING (NOT TO SCALE)
11685-W-58	7	CONTRACT 1172 CARROLLTON FILTER BACKWASH RECYCLE FACILITY
12098-W8	79	CONTRACT 1369 HMGP EMERGENCY FUEL STORAGE RETROFIT POWER PLANT MAIN WATER PURIFICATION PLANT POWER COMPLEX

SEE SHEET PG 4

RESERVOIR L4

MONOBLOCK AREA.

MUD VALVE

MUD VALVE

RESERVOIR L4

DRY PASSAGE

MIXING AREA.

WATER INTAKE PASSAGE

ELECTRICAL SWITCHGEAR BUILDING

DWG. 4173-P6-P1

E 1-2"

E 1-4"

E 1-4"

4-4" & 1-2" TO HAMILTON SUB. (2" FOR G3 LIGHTS)

2-4"

HANDHOLE

E

L-1 — C-5 PASSAGE
BOTTOM EL. 8.00 8'0" WIDE 13'0" HIGH

TO MUD DISCHARGE

FEEDERS M87 & C87 TO CHEMICAL HOUSE — IN CABLE TRAY

1-4", 2-3" CONDUIT ONLY, FOR FUTURE MUD PUMP CONVERSION TO 60HZ.

2-4"c. FUTURE MUD PUMP FEEDERS

M87 & C87 IN TRAY TO SUBSTATION "B".

SWITCH HOUSE

COAGULATING RESERVOIR NO. 5

COAGULATING RESERVOIR NO. 7

C-5 — C-7 PASSAGE
BOTTOM PASSAGE 24'-1" WIDE - 14'0" WIDE BOTTOM EL. 1.80
TOP PASSAGE 4'0" WIDE - 14'0" WIDE BOTTOM EL. 22.75

M87 & C87 IN CONCRETE CURB.

PLAN OF WATER PURIFICATION PLANT
SHEET No. 15

SEWERAGE AND WATER BOARD
NEW ORLEANS, LA.

DATE SEPT. 1, 1938
DRAWING No. 8815-W-24

REV.	DATE	DESCRIPTION	BY

SEWERAGE AND WATER BOARD OF NEW ORLEANS

UNDERGROUND UTILITIES
AT CARROLLTON PLANT

DR.
CK.
AP.
SCALE 1/16" = 1'-0"
DATE 4-1-74

GENERAL SUPERINTENDENT

DWG. No. 1757-P11

MH
TWIN 60" RAN WATER LINES
TO RIVER STATIONS
4" Ø SEWER LINE
WAREHOUSE NO. 2
1'-6"
6" U.P. GAS
8" SEWER
6" WATER
¾" Ø TYPE 'L' COPPER LINE
HAMILTON WAREHOUSE
12-5"C TO RIVER STATIONS
MATCH LINE

HAMILTON STREET
12-5" C. TO RIVER STATIONS
7'-6" CL DUCT TO FENCE
TO NOPSI POLE
¾" Ø TYPE 'L' COPPER LINE
NEGATIVE WIRE TO 60" PIPES
12-5" C
48" Ø
12-4" C
CONC. PAD
VENTURE MANHOLE
VALVE WITH HOLE
6-4" C. JEFFERSON RIVER STATION CONTROL
SEE SHEET 1757-P25
10'-0"
24" MUD LINE FROM RECYCLE BASIN
DUCT TO L3/24 SUB STATION - 4-4"C
TO L3/L4 SUBSTATION

METAL STORAGE BUILDING
HAMILTON SUB-STATION
WAREHOUSE SERVICE TRANSFORMER
CATHODIC PROTECTION DEEP GROUND BED
MANHOLE
MH
CONC. PAD

MATCH LINE
HAMILTON WAREHOUSE
WAREHOUSE NO. 1
ORLEANS - JEFFERSON PARISH LINE

BASIN G 3

REV.	DATE	DESCRIPTION	BY

SEWERAGE AND WATER BOARD OF NEW ORLEANS

UNDERGROUND UTILITIES AT CARROLLTON WATER PLANT

DR. J.A.N.	
TRC.	
CK.	GENERAL SUPERINTENDENT
AP.	
SCALE 1/16"=1'-0"	DWG. No. 1757-P30
DATE	SET NO. / SHEET NO.

BRUNING 40-22 74172

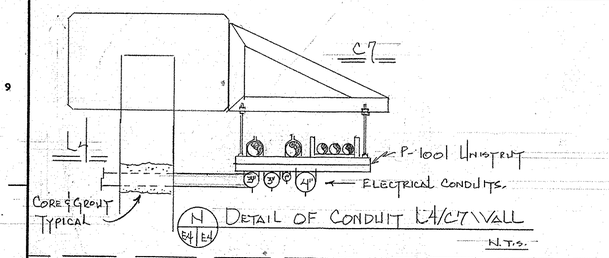

N E4 E4 Detail of Conduit L4/C7 Wall

N.T.S.

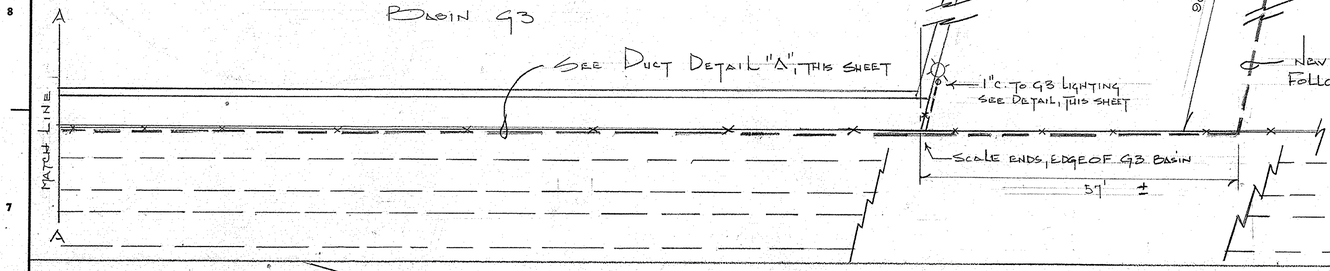

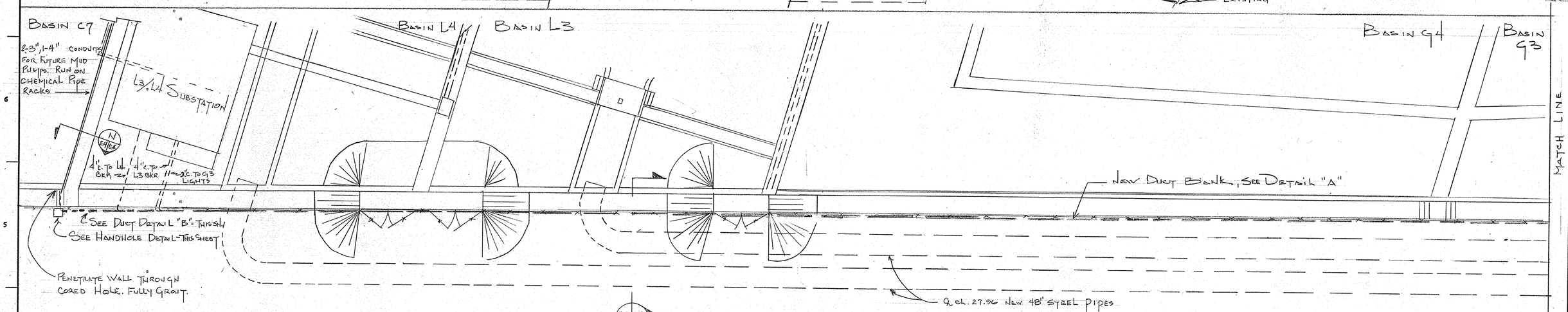

E4 E4 D High Voltage Duct Installation

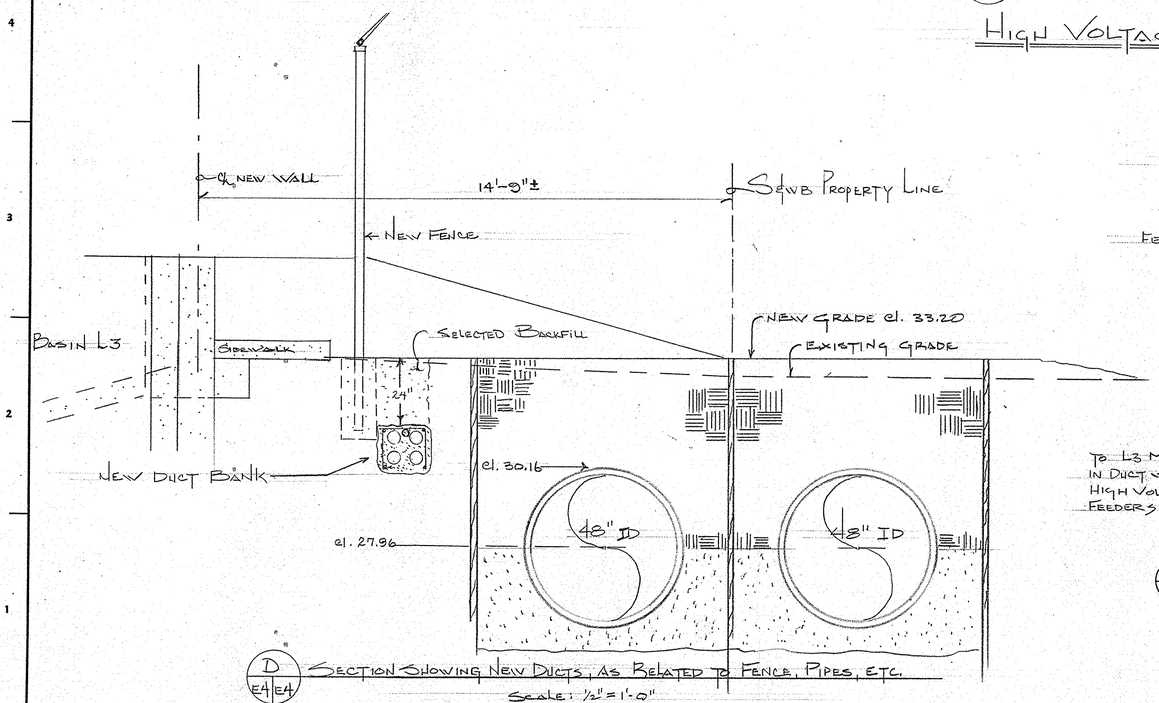

D E4 E4 Section Showing New Ducts, As Related To Fence, Pipes, Etc.

Scale: ½" = 1'-0"

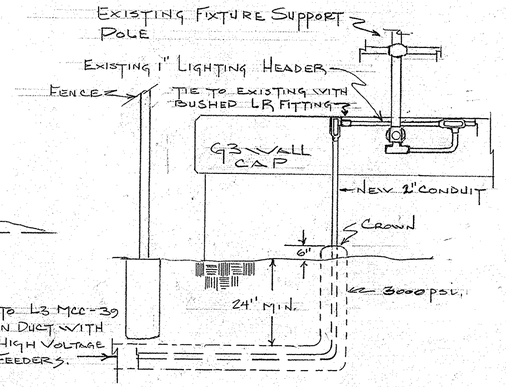

E E5 E4 Detail of G3 Basin Light Feed

N.T.S.

1"=10'-0"

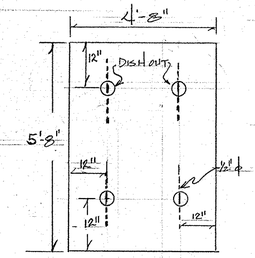

Top Layout N.T.S.

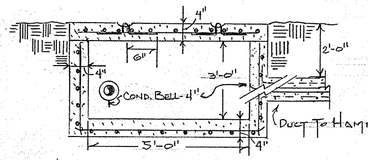

Notes:
1. All rebar ½"ϕ, 6" on centers, both ways.
2. All concrete - 3000 psi.
3. Tie duct rebar into handhole rods.
4. Provide maximum offset between ducts.

Handhole Crossection

N.T.S.

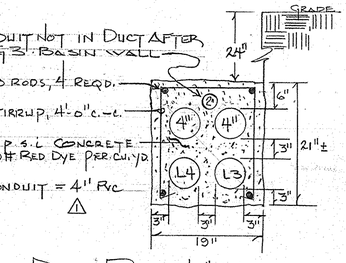

Duct Detail "A"

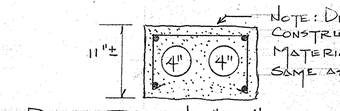

Note: Depth, construction, materials, etc. same as above.

Duct Detail "B"

E4

REV.	DATE	DESCRIPTION	BY
1	3-3-82	CHANGED CONDUIT SIZE	T.H.H.

SEWERAGE AND WATER BOARD OF NEW ORLEANS

CONTRACT 1095
INSTALLATION OF HIGH VOLTAGE CABLE FOR BASINS L3 & L4

DR. SARRAT	GENERAL SUPERINTENDENT
TRC.	
CK. SARRAT	
AP. SARRAT	DWG. No. 4173-P4
SCALE AS SHOWN	SET NO.
DATE 6-10-81	SHEET NO. 30 of 94

Diatogen N. O. 1984 "Agaproof"

COAGULATING RESERVOIR NO. 8

69'-1 1/4"

72'-0 1/2"

16'-1 1/4"

16'-9 3/8"

FENCE

S.&W.B. PROPERTY LINE

ORLEANS & JEFFERSON PARISH LINE

6"C.I. PIPE

6"x6"x6" TEE

TOP OF 6"C.I. PIPE EL. 25.88

112'-0"

3'-1.7"

TOP OF PIPE EL. 18.18

E.EL. 26.8

24" STL. PIPE

16'-0"

60" I.D. PIPE LINE

CATCH BASIN
INV. EL. 16.29

12"ϕ D.P. LINE

TANK NO 9

SCALE

10 5 0 10 20 30 40 50

1" = 12' 6"

PLAN OF WATER PURIFICATION PLANT
SHEET No. 18

SEWERAGE & WATER BOARD
NEW ORLEANS, LA.

REV. 3-12-92

DATE - JUNE 29, 1940
DRAWING No. B818-W-24
REV. 8-28-85

AF 12738

℄ TANK No 9 (NEW)

112'-7"

136'-0"

96'-0"

TANK No 8 (NEW)

℄ TANK No 10 (NEW)

FUTURE 50" I.D. PIPE LINE

24" STL PIPE

16'-0"

48" ϕ BUTTERFLY VALVE

CATCH BASIN INV. EL. 16.29

12" D.P. LINE

50" I.D. PIPE LINE

FENCE

15" ϕ CONC. DRAIN LINE (EXIST.)

CURB

FENCE

℄ EL. 16.4 △ 24" STL. PIPE

SO. CLAIBORNE AVE.

24" STL. PIPE

℄ EL. 13.8

24" STL. PIPE

℄ EL. 16.8

℄ EL. 15.3 ⚠

REV.	DATE	DESCRIPTION	BY
⚠	3-10-92	24" STL PIPE	T.N.

SEWERAGE AND WATER BOARD OF NEW ORLEANS

PLAN OF WATER PURIFICATION PLANT — SHEET No 2.6

DR. B.A.F.	
TRC.	
CK.	GENERAL SUPERINTENDENT
AP.	DWG. No. 8826-W-24
SCALE 1" = 12'-6	
DATE 8-23-85	SET NO. SHEET NO. 2.6 OF 2.6

A B C D E F G H J K L

SCALE
10 0 10 20 30 40 50
100 TO 1
1"=12'-6"

2-12" SLUDGE LINES

SLUDGE SUMP

SLUDGE SUMP

107'-0"

BASIN G-3

EDGE OF CONC. SLAB

10" WALL

TOE OF SLOPE

24" HOBAS CMPD SEWER PIPE

G-3 & G-4 WALL

BASIN G-4

SLUDGE SUMP

SLUDGE SUMP

EDGE OF CONC. SLAB

10" WALL

TOE OF SLOPE

14'-0"

2-12" SLUDGE LINES

33'-0"

SLOW MIXING CHANNEL

SLOW MIXING CHANNEL

G-4 & L-3 WALL

WALKWAY

Asphalt RAMP

DAPPLE WALL COLUMN

DAPPLE WALL

SUMP H

SUMP D

SUMP A

ACCESS OPENING TO DRY PASSAGE

LOW DRY PASSAGE

4 PUMPS A & D

LIME MIXING RESERVOIR No. 3

4'-0" SLAB

SLOPE

ROCK FILL BELOW

M

PLANT OF WATER PURIFICATION
FILTER AREA

ELEVATE AND WIDEN ROAD OVER NEW QUEENSTON RESERVOIR

DATE 5/15/50
DRAWING NO. 27-1124

DRAWING NO. 0-1908

1 PAGE 16

AF 12739

60" MORTAR COATED STEEL PIPE

OPERATING SLAB

H.O. S & W.B. ℄ AND FENCH LINE

2'-10"

2'-10"

26'-2"

30'-0"

12'-0"

240'-0"

VENTURI MANHOLE

32'-6"

℄ 24" STL. PIPE

109'-9½"

HOLLYGROVE STREET

NEW OPERATING SLAB

WALKWAY

℄ G-3 WALL

WALKWAY

℄ G-3 WALL

INFLUENT STRUCTURE

FLASH MIXING CHAMBERS

℄ GRIT COLLECTOR BED

PIER

PEDESTAL

℄ SLOW MIXING CHANNEL

CURB

PIER

PEDESTAL

℄ SLOW MIXING CHANNEL

PEDESTAL

PIER

℄ EXIST PASSAGE

WEIR TROUGHS

BAFFLE WALL

BASIN G-3

℄ 24" RECYCLE PIPE

10'-0"

℄ 8-12" SLUDGE LINES

SLUDGE SUMP

℄ 12" SLUDGE LINES

SLUDGE SUMP

REV.	DATE	DESCRIPTION	BY
1	3-19-92	NEW 24" STL. PIPE	T.N

SEWERAGE AND WATER BOARD OF NEW ORLEANS

PLAN OF WATER PURIFICATION PLANT

DR. B.S.S.	
TRC.	
CK.	GENERAL SUPERINTENDENT
AP.	
SCALE 1"=12'-0"	DWG. No. 8828 W-24
DATE 9/3/1986	SET NO. / SHEET NO.

BRUNING 40-22 56957

G BASIN 4

℄ SLOW MIXING CHANNEL

MACHINERY PAD

℄ SLOW MIXING CHANNEL

MACHINERY PAD

℄ G & L-3 WALL

BASIN 'L-3"

SUMP 'D'

SUMP 'A'

OPENING TO DRY PASSAGE

℄ OF DRY PASSAGE

℄ PUMP A & D

BASIN 'L-3"

BAFFLE WALLS

NEW GRATING

SUMP

SUMP

BASIN 'L-4'

SUMP 'G'

SUMP 'E'

℄ DRY PASSAGE

℄ PUMP 'C' & 'D'

BASIN 'L-4'

L-4 & C-5 PASSAGE

'C' BASIN No. 5

SWITCH HOUSE

'C' RESERVOIR No. 7

ASPHALT RAMP

24" STL PIPE ℄ EL. 26.0 ⚠

CONC. RAMP

4" CONC. SLAB

℄ INFLUENT PASSAGE

PASSAGE WALL & DOUBLE

CONC. RAMP

ELEC. MH.

SLOPE

4" CONC. SLAB

GRATING HALLWAY

GRATING HALLWAY

24'-0

℄ INFLUENT PASSAGE

CONC. RAMP

SLOPE

12'-0 WIDE GATE

4" CONC. SLAB

ELECTRICAL SWITCHGEAR BUILDING

SLOPE

REV.	DATE	DESCRIPTION	BY
⚠	5-23-92	NEW 24" STL PIPE	T.N.

SEWERAGE AND WATER BOARD OF NEW ORLEANS

PLAN OF MAIN PURIFICATION WATER PLANT

DR. B.S.S.	
TRC.	
CK.	GENERAL SUPERINTENDENT
AP.	DWG. No. 8829-W24
SCALE 1"=12'-0"	
DATE 9/8/86	SET NO. / SHEET NO.

AF 12739

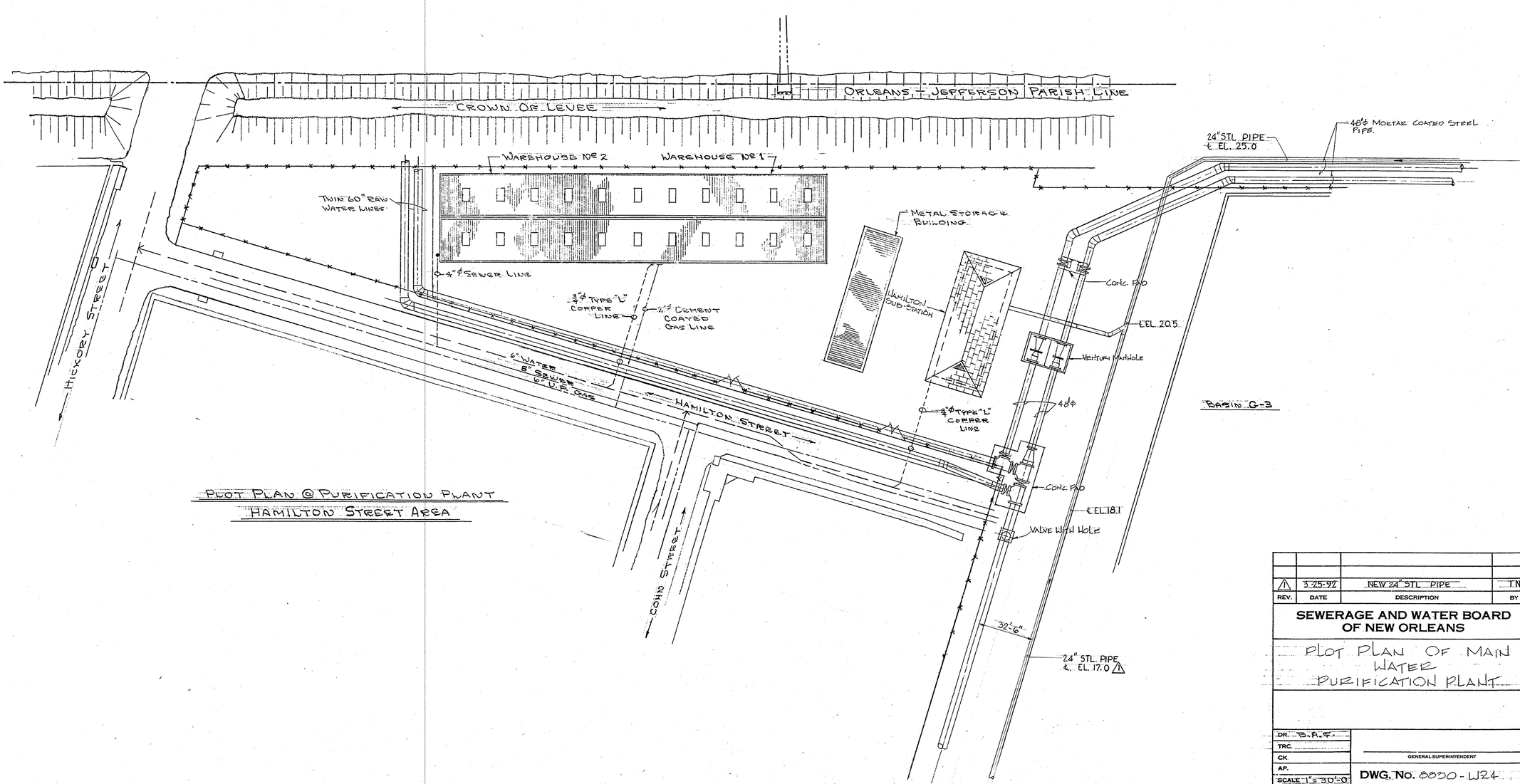

PLOT PLAN @ PURIFICATION PLANT
HAMILTON STREET AREA

REV.	DATE	DESCRIPTION	BY
⚠	3-25-92	NEW 24" STL PIPE	T.N.

SEWERAGE AND WATER BOARD OF NEW ORLEANS

PLOT PLAN OF MAIN WATER PURIFICATION PLANT

DR. B.A.F.	
TRC.	
CK.	GENERAL SUPERINTENDENT
AP.	
SCALE 1"= 30'-0"	DWG. NO. 8090 - W24
DATE 3-11-83	SET NO. / SHEET NO. 1

BK.NINS-40-22 56957

Final SUE Plan Set
J:\100162_00 Power Eng - SWBNO WPC Group 3 Projects\91 SUE Files\CAD\SUE Sheet Set_TITLE.dgn
2/21/2023 07:10

SUBSURFACE UTILITY ENGINEERING MAP

POWER ENGINEERS, INC.

SJB GROUP PROJECT No. 100162.00

SEWERAGE AND WATER BOARD OF NEW ORLEANS

ORLEANS PARISH

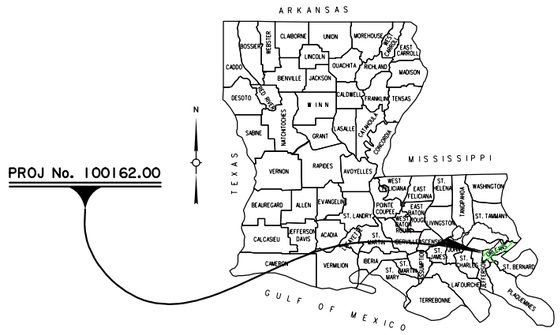

VICINITY MAP

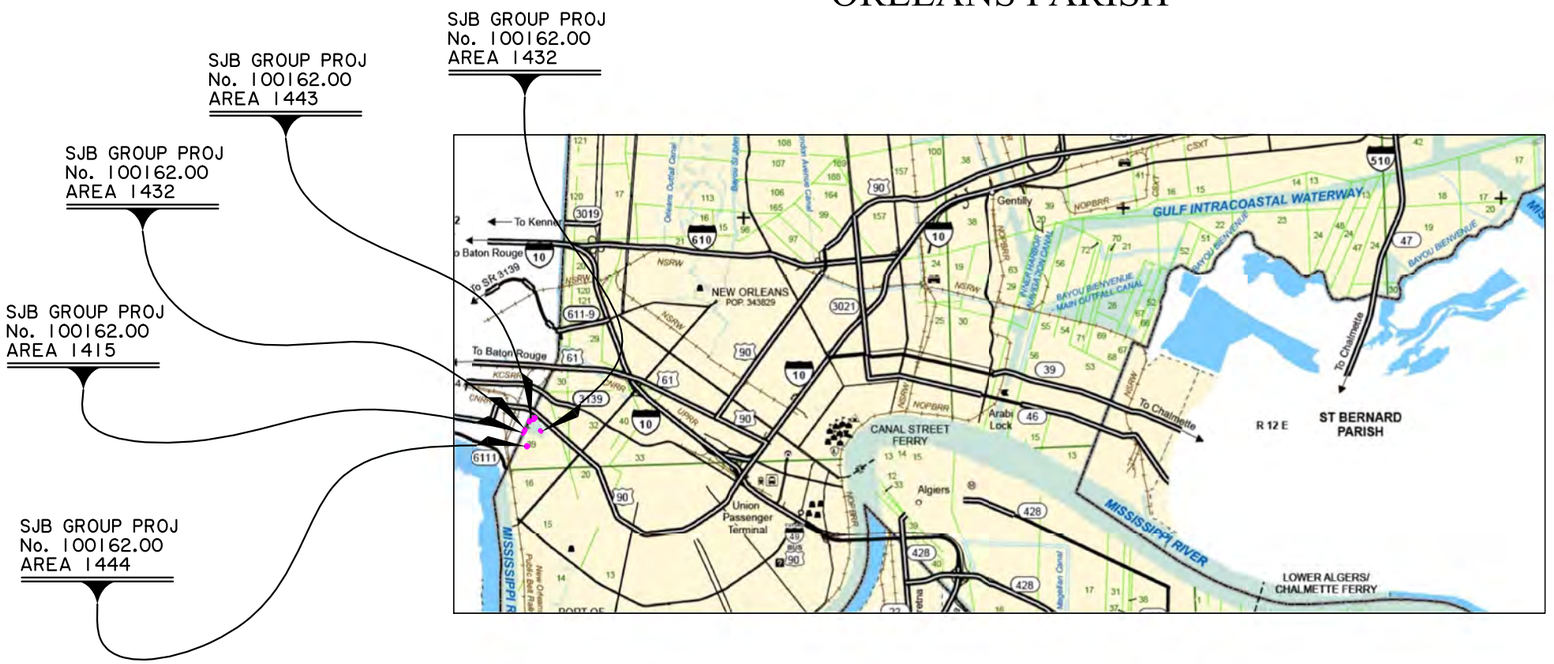

LAYOUT MAP

SCALE: 1 INCH = 1 MILE

1 0 1 2 3

STATE OF LOUISIANA
KAREN M KENNEDY
REG No. 28547
REGISTERED PROFESSIONAL ENGINEER IN CIVIL ENGINEERING

02/21/2023

SHEET NUMBER	
PARISH	ORLEANS
CONTROL SECTION	N/A
SJB GROUP PROJECT	100162.00
COMPUTED / CHECKED	AWL / KMK
DETAILED / CHECKED	TTF / KMK
DATE / SCALE	02/21/2023 / 1"=1 MILE

SUBSURFACE UTILITY ENGINEERING MAP
SJB GROUP PROJECT No. 100162.00
SEWERAGE AND WATER BOARD OF NEW ORLEANS
ORLEANS PARISH
POWER ENGINEERS, INC.

SJB GROUP, LLC

BY | REVISION DESCRIPTION | DATE

FILE NO. XX-XX-X-XXX | S.U.E. SHEET NO. TITLE

Final SUE Plan Set
J:\100162_00 Power Eng - SWBNO WPC Group 3 Projects\91 SUE Files\CAD\SUE Sheet Set\000 SUE Legend.dgn
2/21/2023 07:10

LEGEND:

UTILITY LINES:

- E(B) — UNDERGROUND POWER LINE (QL-B)
- E(C) — UNDERGROUND POWER LINE (QL-C)
- E(D) — UNDERGROUND POWER LINE (QL-D)
- SFM(B) — SEWER FORCE MAIN (QL-B)
- SFM(C) — SEWER FORCE MAIN (QL-C)
- SFM(D) — SEWER FORCE MAIN (QL-D)
- S(B) — GRAVITY SEWER/STORM DRAIN (QL-B)
- S(C) — GRAVITY SEWER/STORM DRAIN (QL-C)
- S(D) — GRAVITY SEWER/STORM DRAIN (QL-D)
- W(B) — UNDERGROUND WATER LINE (QL-B)
- W(C) — UNDERGROUND WATER LINE (QL-C)
- W(D) — UNDERGROUND WATER LINE (QL-D)
- G(B) — UNDERGROUND GAS LINE (QL-B)
- G(C) — UNDERGROUND GAS LINE (QL-C)
- G(D) — UNDERGROUND GAS LINE (QL-D)
- TFO(B) — UNDERGROUND TELEPHONE FIBER OPTIC (QL-B)
- TFO(C) — UNDERGROUND TELEPHONE FIBER OPTIC (QL-C)
- TFO(D) — UNDERGROUND TELEPHONE FIBER OPTIC (QL-D)
- TFO(B) — MULTIPLE UNDERGROUND TELEPHONE FIBER OPTIC (QL-B)
- TFO(C) — MULTIPLE UNDERGROUND TELEPHONE FIBER OPTIC (QL-C)
- TFO(D) — MULTIPLE UNDERGROUND TELEPHONE FIBER OPTIC (QL-D)
- T(B) — UNDERGROUND TELEPHONE LINE (QL-B)
- T(C) — UNDERGROUND TELEPHONE LINE (QL-C)
- T(D) — UNDERGROUND TELEPHONE LINE (QL-D)
- T⊥(B) — MULTIPLE UNDERGROUND TELEPHONE LINE (QL-B)
- T⊥(C) — MULTIPLE UNDERGROUND TELEPHONE LINE (QL-C)
- T⊥(D) — MULTIPLE UNDERGROUND TELEPHONE LINE (QL-D)
- T/FO(B) — UNDERGROUND TELEPHONE AND FIBER OPTIC (QL-B)
- T/FO(C) — UNDERGROUND TELEPHONE AND FIBER OPTIC (QL-C)
- T/FO(D) — UNDERGROUND TELEPHONE AND FIBER OPTIC (QL-D)
- TV(B) — UNDERGROUND TV LINE (QL-B)
- TV(C) — UNDERGROUND TV LINE (QL-C)
- TV(D) — UNDERGROUND TV LINE (QL-D)
- TVFO(B) — UNDERGROUND TV FIBER OPTIC (QL-B)
- TVFO(C) — UNDERGROUND TV FIBER OPTIC (QL-C)
- TVFO(D) — UNDERGROUND TV FIBER OPTIC (QL-D)
- TRP(B) — UNDERGROUND TRAFFIC POWER (QL-B)
- TRP(C) — UNDERGROUND TRAFFIC POWER (QL-C)
- TRP(D) — UNDERGROUND TRAFFIC POWER (QL-D)
- TRFO(B) — UNDERGROUND TRAFFIC FIBER OPTIC (QL-B)
- TRFO(C) — UNDERGROUND TRAFFIC FIBER OPTIC (QL-C)
- TRFO(D) — UNDERGROUND TRAFFIC FIBER OPTIC (QL-D)
- O(B) — UNDERGROUND PIPELINE (QL-B)
- O(C) — UNDERGROUND PIPELINE (QL-C)
- O(D) — UNDERGROUND PIPELINE (QL-D)
- UNK(B) — UNKNOWN LINE (QL-B)
- LIMITS OF SURVEY
- FENCE LINE

SYMBOLOGY:

GAS UTILITY SYMBOLS

- GAS RISER
- GAS VENT
- PIPELINE UTILITY MARKER
- PIPELINE VENT
- GAS UTILITY MARKER
- GAS METER
- GAS VALVE
- GAS/PIPELINE TEST HOLE

WATER UTILITY SYMBOLS

- WATER UTILITY MARKER
- WATER VALVE VAULT
- FIRE HYDRANT
- WATER METER
- WATER VALVE
- WATER SPIGOT
- WATER TEST HOLE
- WATER MANHOLE TOP

SEWER UTILITY SYMBOLS

- SEWER TREATMENT PLANT POINT
- SEWER MANHOLE TOP
- SEWER LIFT STATION POINT
- SEWER CLEANOUT
- SEWER PUMP
- SEWER UTILITY MARKER
- STORM DRAIN INLET
- SEWER TEST HOLE

MISCELLANEOUS SYMBOLS AND LINES

- END OF UTILITY SIGNAL
- UTILITY DROP
- PROBE LOCATION



02/21/2023

ELECTRIC UTILITY SYMBOLS

- POWER DROP
- POWER TRANSFORMER
- POWER VAULT
- POWER JUNCTION BOX
- GUY POLE
- COMBINATION POLE
- POWER POLE
- LIGHT STANDARD
- POWER TEST HOLE
- POWER MANHOLE TOP
- POWER HAND HOLE

TELEPHONE UTILITY SYMBOLS

- TELEPHONE UTILITY MARKER
- TELEPHONE POLE
- TELEPHONE MANHOLE TOP
- TELEPHONE PEDESTAL
- TELEPHONE CROSSCONNECT BOX
- TELEPHONE PRESSURE BOX
- TELEPHONE TEST HOLE
- COMMUNICATIONS HAND HOLE

TELEVISION UTILITY SYMBOLS

- TV MANHOLE TOP
- TV PEDESTAL
- TV UTILITY MARKER
- TV TEST HOLE

TRAFFIC UTILITY SYMBOLS

- TRAFFIC PULL BOX
- TRAFFIC CAMERA CONNECT BOX
- TRAFFIC CAMERA POLE
- LIGHT STANDARD POWER VAULT
- LIGHT STANDARD
- TRAFFIC SIGN CONNECT BOX
- TRAFFIC SIGNAL POWER VAULT
- CANTILVER TRAFFIC SIGNAL POLE
- CABLE SUSPENDED TRAFFIC SIGNAL POLE
- TRAFFIC SIGNAL STANDARD

UTILITY OWNERS:

1) AT&T DISTRIBUTION - HEATH WAXLEY - (504) 249-4505
2) CENTURYLINK/LUMEN - CHADRICK KIRKLAND - (318) 362-1737
3) ENTERGY ELECTRIC - GEORGE DAVIS - (504) 858-3281
4) ENTERGY GAS - PERRY SAMUEL - (504) 595-3709
5) SEWERAGE & WATER BOARD OF NEW ORLEANS (SWBNO) - RON SPOONER - (504) 654-9404

LA ONE CALL TICKETS:
*220827683

UTILITY NOTES:
THE SUBSURFACE UTILITIES SHOWN ON THE MAP OF SURVEY WERE IDENTIFIED USING THE INDUSTRY STANDARD DETECTION METHODOLOGIES IN ACCORDANCE WITH THE AMERICAN SOCIETY OF CIVIL ENGINEERS (ASCE) STANDARD GUIDELINE FOR THE COLLECTION AND DEPICTION OF EXISTING SUBSURFACE UTILITY DATA.

QUALITY LEVELS AND DEFINITIONS PER CI/ASCE STANDARD NO. 38-02:

QUALITY LEVEL "D" - DEPICTED ACCORDING TO UTILITY RECORD INFORMATION AND IN-FIELD VISUAL INSPECTION. NO ELECTRONIC DESIGNATING INFORMATION WAS OBTAINED.

QUALITY LEVEL "C" - EXISTING UTILITY STRUCTURES HAVE BEEN FIELD LOCATED AND SURVEYED TO ASSIST IN THE DEPICTING OF THE UTILITIES SHOWN ON THE RECORDS. NO ELECTRONIC DESIGNATING INFORMATION WAS OBTAINED.

QUALITY LEVEL "B" - INFORMATION WAS OBTAINED THROUGH THE APPLICATION OF APPROPRIATE SURFACE GEOPHYSICAL METHODS TO DETERMINE THE EXISTENCE AND APPROXIMATE HORIZONTAL POSITION OF THE SUBSURFACE UTILITIES. QL-B DATA SHOULD BE REPRODUCIBLE BY SURFACE GEOPHYSICS AT ANY POINT OF THEIR DEPICTION.

QUALITY LEVEL "A" - OBTAIN PRECISE HORIZONTAL AND VERTICAL POSITION OF THE UTILITY LINE BY EXCAVATING A TEST HOLE. THE TEST HOLE SHALL BE DONE USING VACUUM EXCAVATION OR COMPARABLE NON-DESTRUCTIVE EQUIPMENT IN A MANNER AS TO CAUSE NO DAMAGE TO UTILITY LINE.

1. UTILITIES ARE DEPICTED ON THESE PLANS IN ACCORDANCE WITH THEIR ACHIEVED "QUALITY LEVELS" AS DEFINED IN THE AMERICAN SOCIETY OF CIVIL ENGINEER'S DOCUMENT ASCE 38-02, "STANDARD GUIDELINE FOR THE COLLECTION AND DEPICTION OF EXISTING SUBSURFACE UTILITY DATA."

2. UTILITIES WITH A QUALITY LEVEL "D" LABEL ARE DEPICTED ON THE PLANS USING JUDGMENT IN INTERPRETING AVAILABLE THIRD-PARTY RECORDS OR OTHER INFORMATION.

3. UTILITIES WITH A QUALITY LEVEL "C" LABEL ARE DEPICTED ON THE PLANS USING JUDGMENT IN INTERPRETING AVAILABLE THIRD-PARTY RECORDS OR OTHER INFORMATION AND THEN CORRELATING THAT INFORMATION TO EXISTING SURVEYED STRUCTURES.

4. UTILITIES WITH A QUALITY LEVEL "B" LABEL ARE DEPICTED ON THE PLANS USING JUDGMENT IN SELECTING AND INTERPRETING APPROPRIATE GEOPHYSICAL DATA, SURVEYING TO APPROPRIATE PROJECT ACCURACIES THE PROJECTION OF THAT DATA ON THE GROUND SURFACE, AND THEN USING JUDGMENT TO CORRELATE THIRD-PARTY AVAILABLE RECORDS OR OTHER INFORMATION, IF ANY, AS PERTAINING TO THESE QL-B DEPICTIONS.

5. UTILITY SIZE AND TYPE FOR QUALITY LEVEL "B" DEPICTIONS ARE DETERMINED THROUGH AVAILABLE UTILITY OWNER INFORMATION OR IN-FIELD VISUAL INSPECTION. UTILITIES LABELED AS UNKNOWN HAVE NO CORRELATED RECORDS OR VISIBLE APPURTENANCES TO DETERMINE FUNCTION OR TYPE.

6. AN ATTEMPT TO ACHIEVE QUALITY LEVEL "B" DATA WAS MADE FOR ALL UTILITIES WITHIN THE PROJECT LIMITS FOR AREAS 1443, 1444, AND 1432 EXCEPT FOR GRAVITY SEWERS, IRRIGATION LINES, AND STORM DRAINS.

7. AN ATTEMPT TO ACHIEVE QUALITY LEVEL "B" DATA WAS MADE ONLY FOR THE ELECTRIC DUCT BANK SHOWN WITHIN THE PROJECT LIMITS FOR AREA 1415.

8. UTILITY MAPPING WAS COMPLETED ON 01/24/2023. UTILITIES MAY HAVE BEEN CHANGED OR ADDED AFTER THIS DATE.

9. RELIANCE UPON THIS DATA FOR RISK MANAGEMENT PURPOSES DURING BIDDING DOES NOT RELIEVE THE EXCAVATOR OR UTILITY OWNER FROM FOLLOWING ALL APPLICABLE UTILITY DAMAGE PREVENTION STATUTES, POLICIES, AND/OR PROCEDURES DURING EXCAVATION.

10. IT IS IMPORTANT THAT THE CONTRACTOR INVESTIGATES AND UNDERSTANDS THE SCOPE OF WORK BETWEEN THE PROJECT OWNER AND THEIR ENGINEER REGARDING THE SCOPE AND LIMITS OF THE UTILITY INVESTIGATIONS LEADING TO THESE UTILITY DEPICTIONS.

11. UTILITY RECORD DRAWINGS WERE NOT AVAILABLE FROM THE FOLLOWING UTILITY OWNERS: AT&T DISTRIBUTION. MULTIPLE EFFORTS WERE MADE TO OBTAIN THESE RECORD DRAWINGS AND THESE ATTEMPTS WERE UNSUCCESSFUL. THE CONTACT INFORMATION FOR THESE UTILITY OWNERS IS PROVIDED, BUT ANY OF THEIR UTILITIES THAT MAY BE PRESENT WITHIN THE PROJECT LIMITS MAY NOT BE SHOWN.

12. UTILITIES WITH NO ASSIGNED QUALITY LEVEL DEPICTED ON THESE PLANS ARE QL-D UNLESS OTHERWISE NOTED.

SHEET NUMBER

PARISH	CONTROL SECTION	SJB GROUP PROJECT
ORLEANS	N/A	100162.00

COMPUTED	AWL	
CHECKED	KMK	
DETAILED	TTF	
CHECKED	KMK	
DATE	02/21/2023	
SCALE	N/A	

SUBSURFACE UTILITY ENGINEERING MAP
SJB GROUP PROJECT No. 100162.00
SEWERAGE AND WATER BOARD OF NEW ORLEANS
ORLEANS PARISH
POWER ENGINEERS, INC.

SJB GROUP, LLC

BY	REVISION DESCRIPTION	DATE

FILE NO. XX-XX-X-XXX | S.U.E. SHEET NO. LEGEND

Final SUE Plan Set

J:\100162_00 Power Eng - SWBNO WPC Group 3 Projects\91 SUE Files\CAD\SUE Sheet Set\KEY.dgn 2/21/2023 07:10

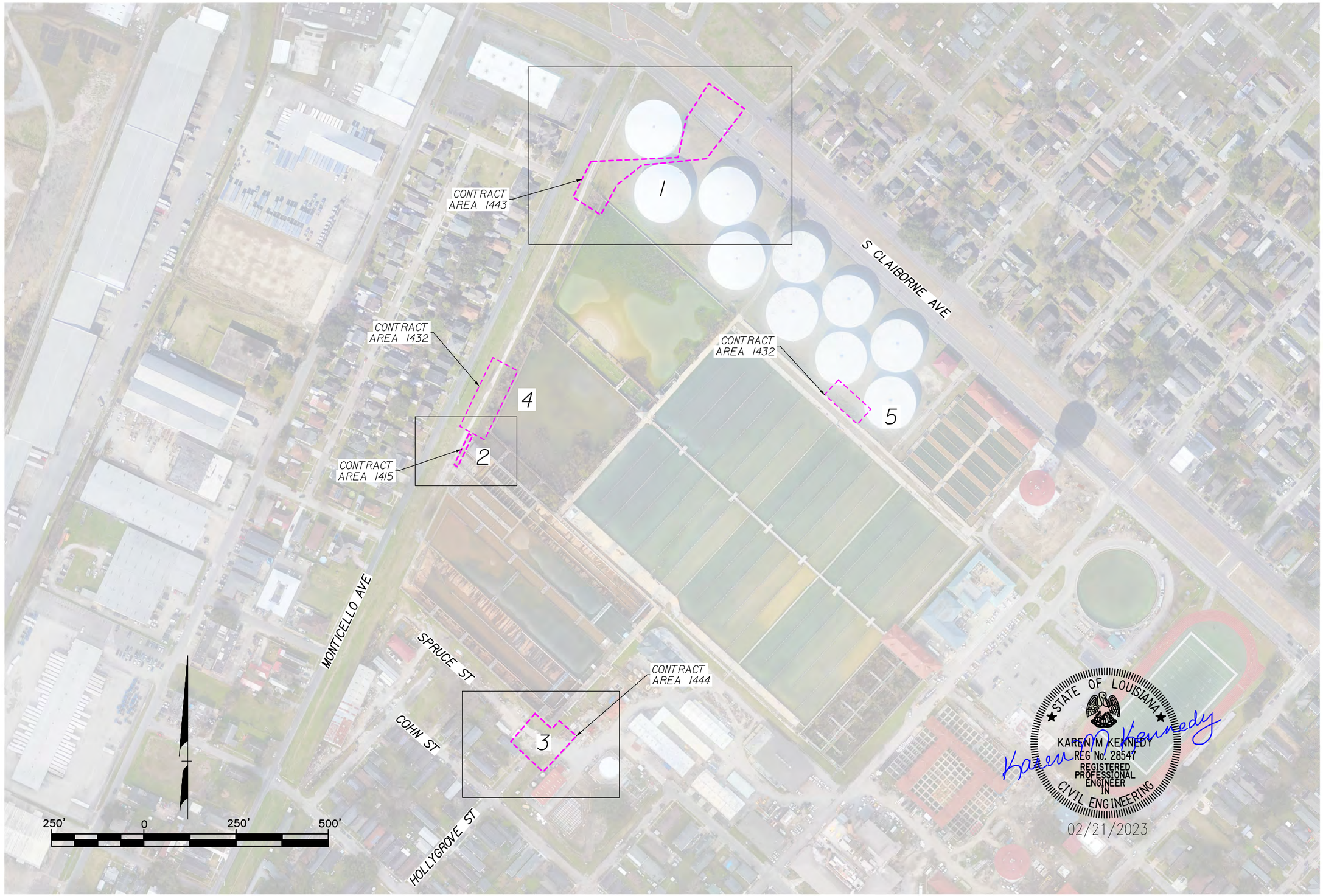

STATE OF LOUISIANA
KAREN M KENNEDY
REG No. 28547
REGISTERED PROFESSIONAL ENGINEER IN CIVIL ENGINEERING
02/21/2023

SUBSURFACE UTILITY ENGINEERING MAP
SJB GROUP PROJECT No. 100162.00
SEWERAGE AND WATER BOARD OF NEW ORLEANS
ORLEANS PARISH
POWER ENGINEERS, INC.

SJB GROUP, LLC

SHEET NUMBER	
PARISH	ORLEANS
CONTROL SECTION	N/A
SJB GROUP PROJECT	100162.00
COMPUTED / CHECKED	AWL / KMK
DETAILED / CHECKED	TTF / KMK
DATE / SCALE	02/21/2023 / 1"=250'

BY	REVISION DESCRIPTION	DATE

FILE NO. XX-XX-X-XXX S.U.E. SHEET NO. KEY

50' 0 50' 100'

APPROXIMATE LOCATION

SWBNO 20' CONCRETE COVERED CANAL (TOP EL=-5.46' TOP INSIDE EL=-6.87' BOTTOM INSIDE EDGE EL=-15.85')

S CLAIBORNE AVE

MISTLETOE ST

SWBNO (416 FEEDER)

SWBNO 24" DI

SWBNO 20' CONCRETE COVERED CANAL (BOTTOM INSIDE EDGE)

ENTERGY 2" PVC

SWBNO 2-2" PVC

ENTERGY 2" PVC

TEST HOLE 3

TEST HOLE 2

TEST HOLE 4

SWBNO 20' CONCRETE COVERED CANAL (TOP OUTSIDE EDGE)

SWBNO 50" STEEL

TEST HOLE 7

TEST HOLE 5

SWBNO 20' CONCRETE COVERED CANAL (TOP EL=-5.27' TOP INSIDE EL=-6.69' BOTTOM INSIDE EDGE EL=-15.31')

SWBNO 2-2" PVC

MONTICELLO AVE

SWBNO 24" DI

SWBNO 2" PVC

SWBNO 1" PVC

SECURITY BUILDING

SWBNO 2-2" PVC (THIS LINE ALSO CONTAINS CATV)

SWBNO 1" PVC

SWBNO 2-2" PVC

SWBNO 6" CI

SWBNO 6" DI

UNABLE TO VERIFY LOCATION OF 6" CI WATER MAIN DURING UTILITY INVESTIGATION. (POTENTIALLY ABANDONED, PER RECORD)

SWBNO 15"x12" CONCRETE DUCT (516 FEEDER CONCRETE COVERED)

SWBNO 1" PVC

SIDEWALK

SWBNO

UNABLE TO VERIFY LOCATION OF 516 FEEDER (OLD) DURING UTILITY INVESTIGATION. (POTENTIALLY ABANDONED, PER RECORD)

E(B) E(D) W(B) W(D) TFO(B) UNK(B) S(E)

STATE OF LOUISIANA
KAREN M KENNEDY
REG No. 28547
REGISTERED PROFESSIONAL ENGINEER IN CIVIL ENGINEERING

02/21/2023

SHEET NUMBER	
PARISH	ORLEANS
CONTROL SECTION	N/A
SJB GROUP PROJECT	100162.00
COMPUTED / CHECKED	AWL / KMK
DETAILED / CHECKED	TTF / KMK
DATE / SCALE	02/21/2023 / 1"=50'

SUBSURFACE UTILITY ENGINEERING MAP
SJB GROUP PROJECT No. 100162.00
SEWERAGE AND WATER BOARD OF NEW ORLEANS
ORLEANS PARISH
POWER ENGINEERS, INC.

SJB GROUP, LLC

BY	REVISION DESCRIPTION	DATE

FILE NO. XX-XX-X-XXX | S.U.E. SHEET NO. 1

MATCHLINE SHEET 4

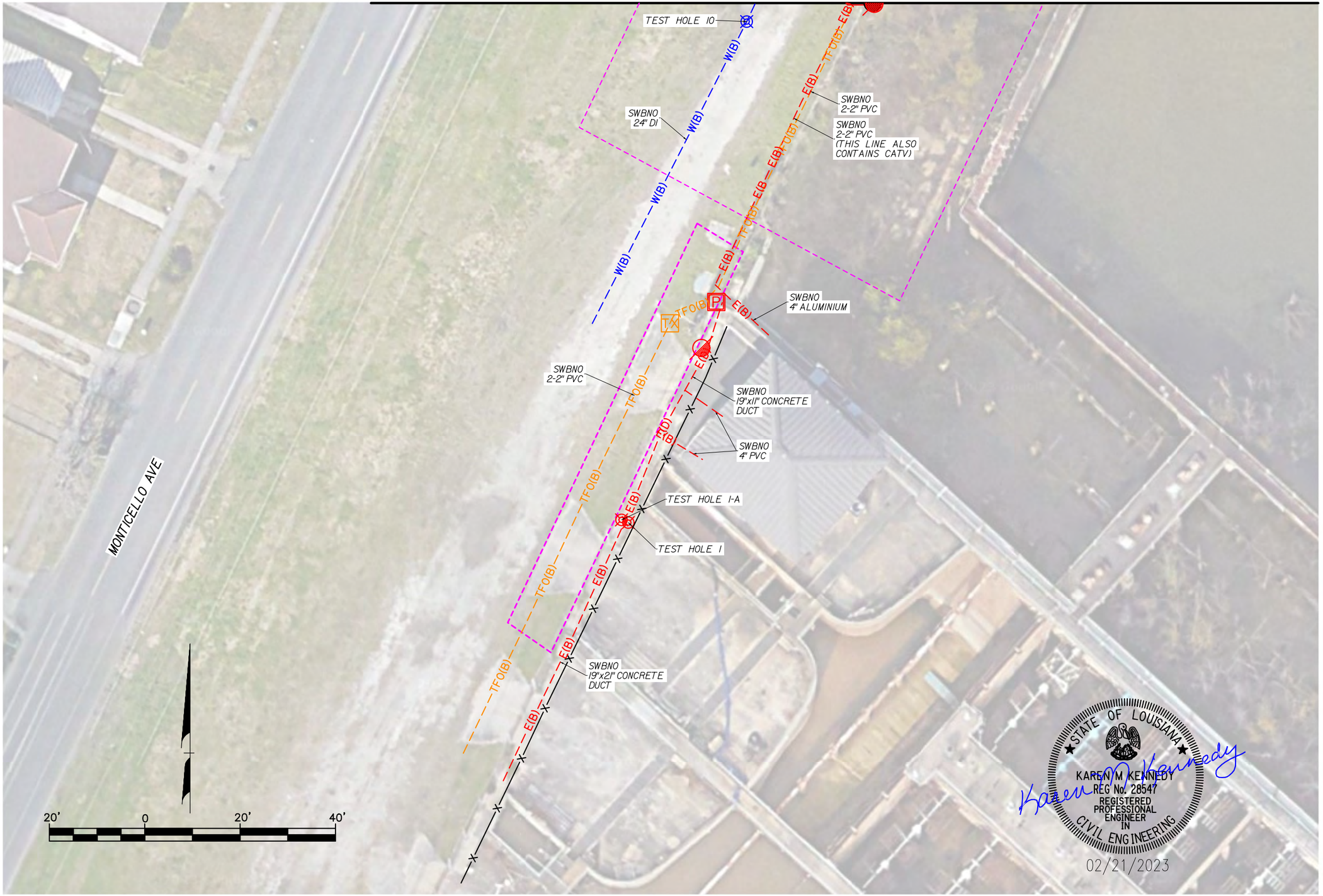

STATE OF LOUISIANA
KAREN M KENNEDY
REG No. 28547
REGISTERED
PROFESSIONAL
ENGINEER
IN
CIVIL ENGINEERING
02/21/2023

SHEET NUMBER	
PARISH	ORLEANS
CONTROL SECTION	N/A
SJB GROUP PROJECT	100162.00
COMPUTED	AWL
CHECKED	KMK
DETAILED	TTF
CHECKED	KMK
DATE	02/21/2023
SCALE	1"=20'

SUBSURFACE UTILITY ENGINEERING MAP
SJB GROUP PROJECT No. 100162.00
SEWERAGE AND WATER BOARD OF NEW ORLEANS
ORLEANS PARISH
POWER ENGINEERS, INC.

SJB GROUP, LLC

BY	REVISION DESCRIPTION	DATE

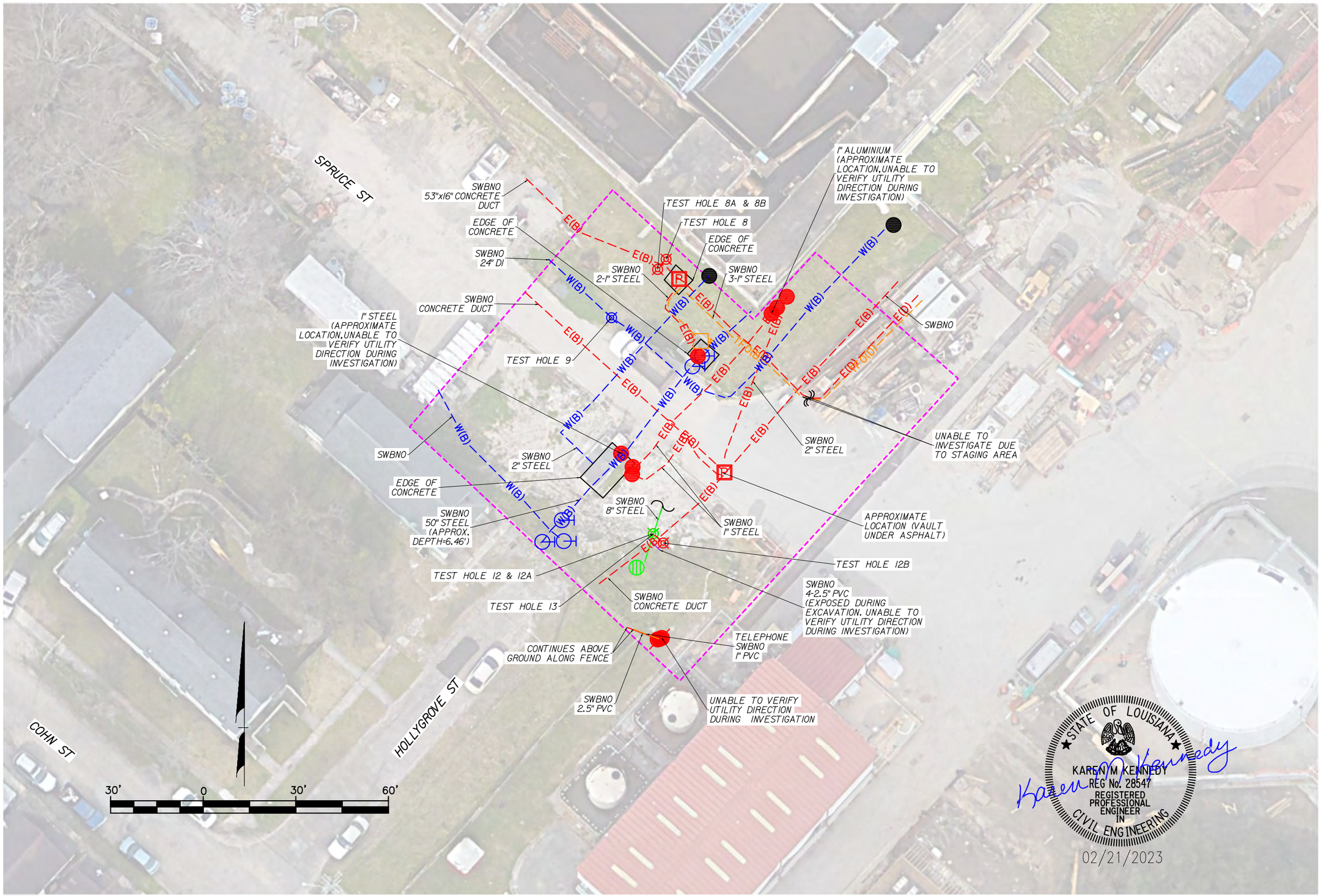

STATE OF LOUISIANA
KAREN M KENNEDY
REG No. 28547
REGISTERED PROFESSIONAL ENGINEER IN CIVIL ENGINEERING
02/21/2023

SUBSURFACE UTILITY ENGINEERING MAP
SJB GROUP PROJECT No. 100162.00
SEWERAGE AND WATER BOARD OF NEW ORLEANS
ORLEANS PARISH
POWER ENGINEERS, INC.

SJB GROUP, LLC

SHEET NUMBER	
PARISH	ORLEANS
CONTROL SECTION	N/A
SJB GROUP PROJECT	100162.00
COMPUTED AWL / CHECKED KMK	
DETAILED TTF / CHECKED KMK	
DATE	02/21/2023
SCALE	1"=30'

REVISION DESCRIPTION | BY | DATE

FILE NO. XX-XX-X-XXX | S.U.E. SHEET NO. 3

Final SUE Plan Set
J:\100162_00 Power Eng - SWBNO WPC Group 3 Projects\91 SUE Files\CAD\SUE Sheet Set\SHEET 3.dgn
2/21/2023 07:10

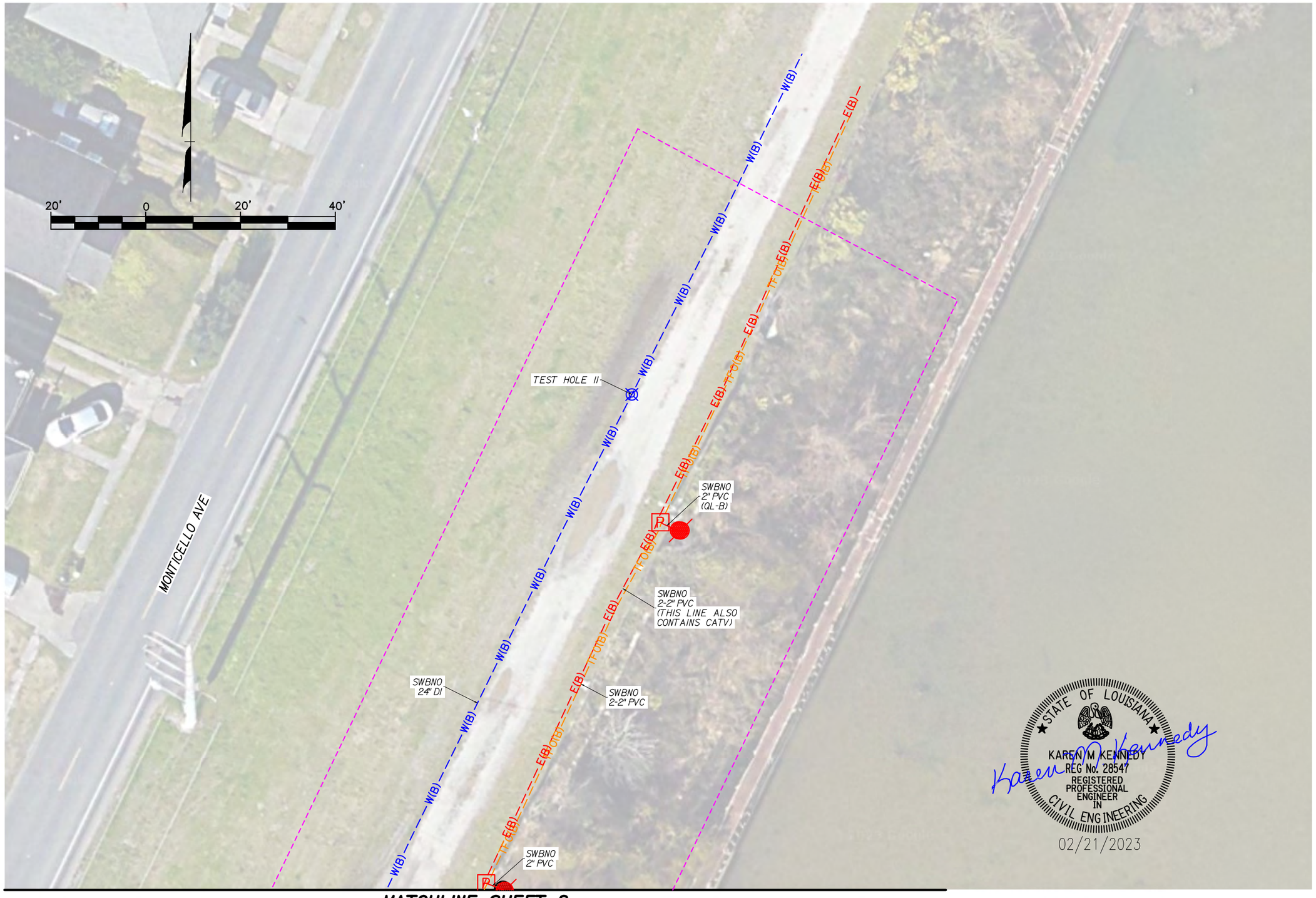

STATE OF LOUISIANA
KAREN M KENNEDY
REG No. 28547
REGISTERED PROFESSIONAL ENGINEER IN CIVIL ENGINEERING
02/21/2023

SHEET NUMBER	
PARISH	ORLEANS
CONTROL SECTION	N/A
SJB GROUP PROJECT	100162.00
COMPUTED / CHECKED	AWL / KMK
DETAILED / CHECKED	TTF / KMK
DATE / SCALE	02/21/2023 / 1"=20'

SUBSURFACE UTILITY ENGINEERING MAP
SJB GROUP PROJECT No. 100162.00
SEWERAGE AND WATER BOARD OF NEW ORLEANS
ORLEANS PARISH
POWER ENGINEERS, INC.

SJB GROUP, LLC

BY	REVISION DESCRIPTION	DATE

FILE NO. XX-XX-X-XXX | S.U.E. SHEET NO. 4

Final SUE Plan Set
J:\100162_00 Power Eng - SWBNO WPC Group 3 Projects\91 SUE Files\CAD\SUE Sheet Set\SHEET 5.dgn
2/21/2023 07:11

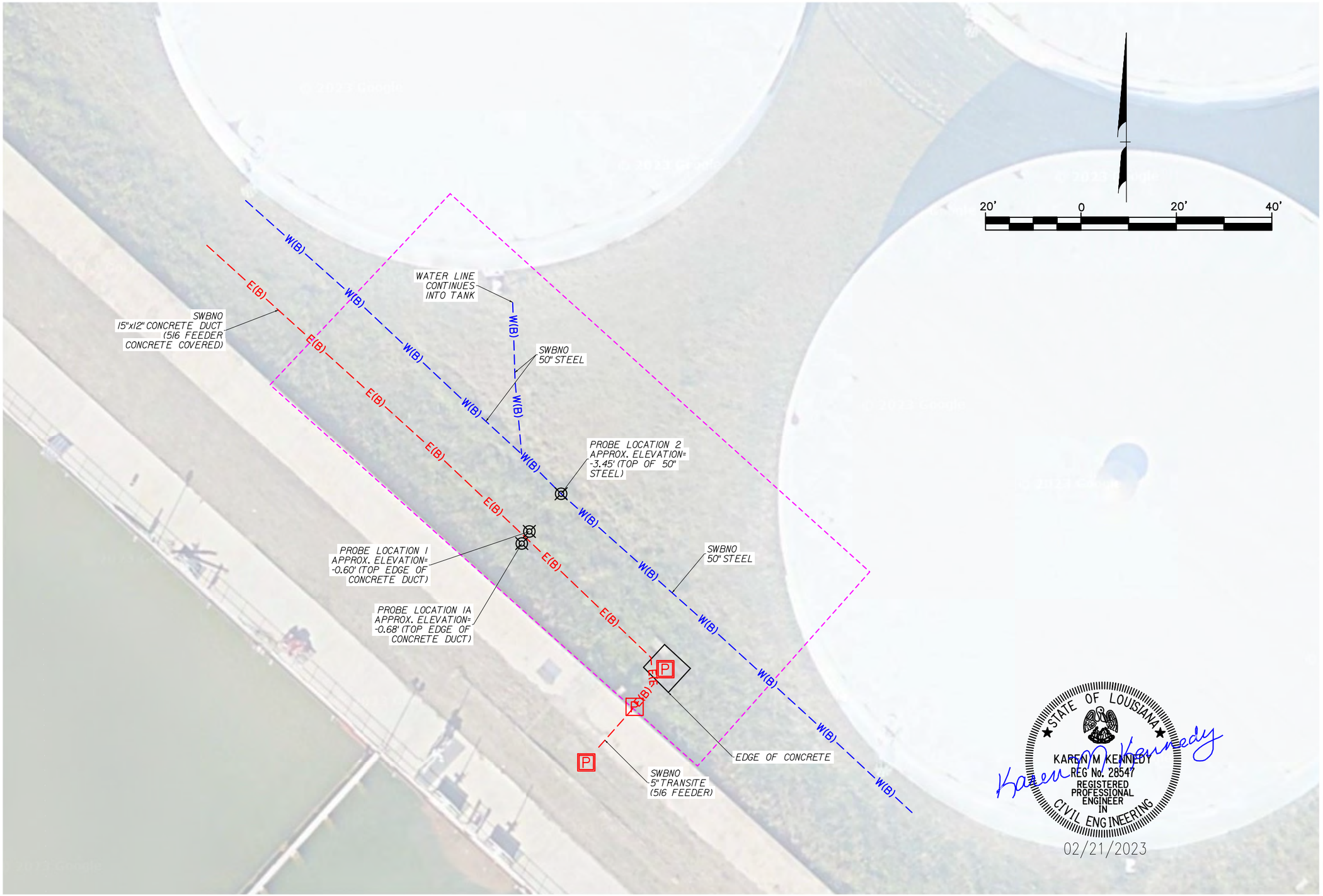

STATE OF LOUISIANA
KAREN M KENNEDY
REG No. 28547
REGISTERED
PROFESSIONAL
ENGINEER
IN
CIVIL ENGINEERING

02/21/2023

SHEET NUMBER	
PARISH	ORLEANS
CONTROL SECTION	N/A
SJB GROUP PROJECT	100162.00
COMPUTED / CHECKED	AWL / KMK
DETAILED / CHECKED	TTF / KMK
DATE / SCALE	02/21/2023 1"=20'

SUBSURFACE UTILITY ENGINEERING MAP
SJB GROUP PROJECT No. 100162.00
SEWERAGE AND WATER BOARD OF NEW ORLEANS
ORLEANS PARISH
POWER ENGINEERS, INC.

SJB GROUP, LLC

BY	REVISION DESCRIPTION	DATE

FILE NO. XX-XX-X-XXX | S.U.E. SHEET NO. 5

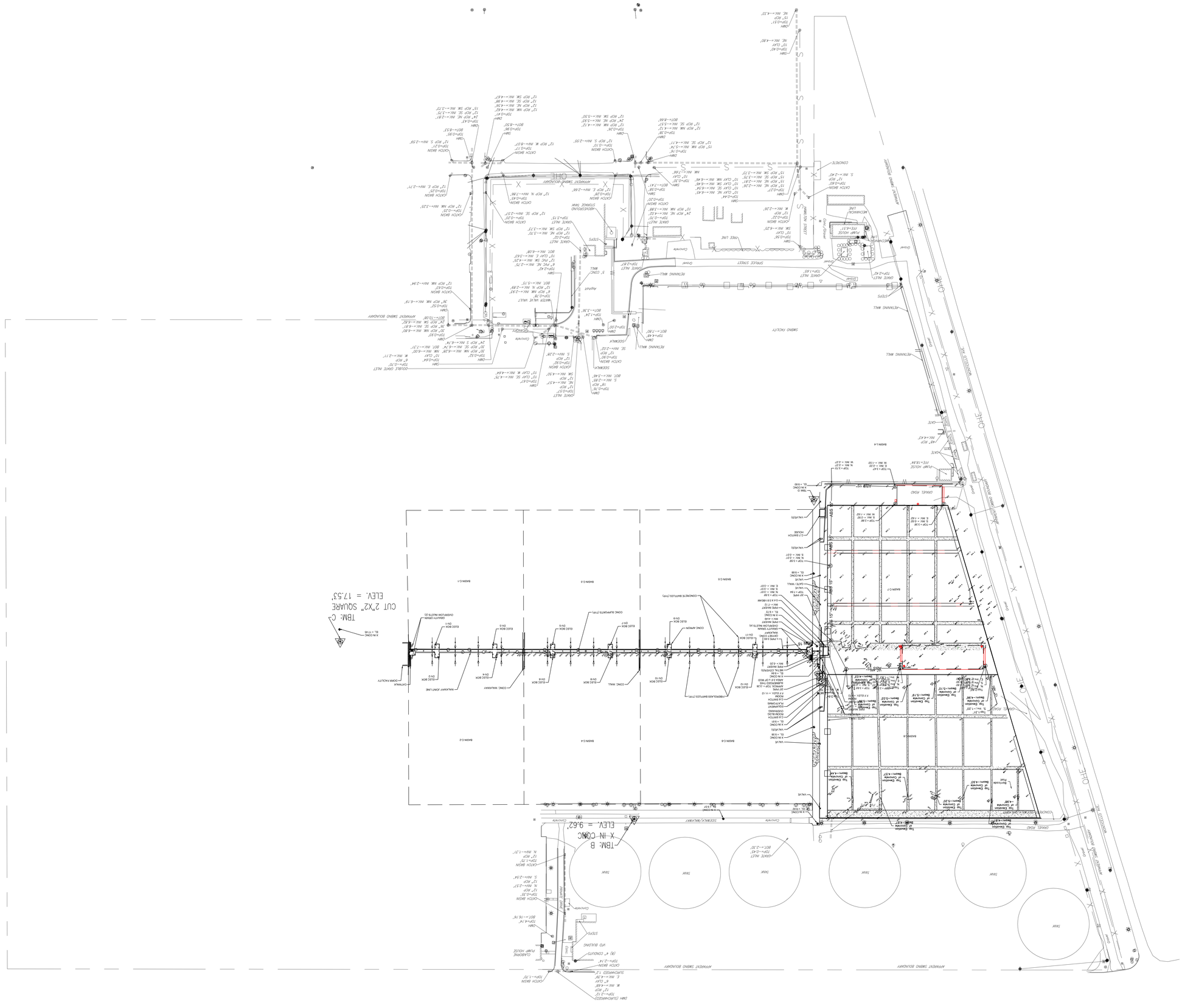
TBM: B
X =N: CONC
ELEV. = 9.62'
TBM: C
CUT 2"X2" SQUARE
ELEV. = 17.53'
ANNUNCIATOR SWING
SWING FACILITY
SHUTTLE STREET
SCREWLEY/BEARRY
ANNUNCIATOR SWING BOUNDARY
ANNUNCIATOR SWING BOUNDARY
ANNUNCIATOR SWING BOUNDARY
RETAINING WALL
RETAINING WALL
RETAINING WALL

FILTER BACKWASH RECYCLE FACILITY

CARROLLTON WATER PURIFICATION PLANT

CONTRACT NUMBER 1172

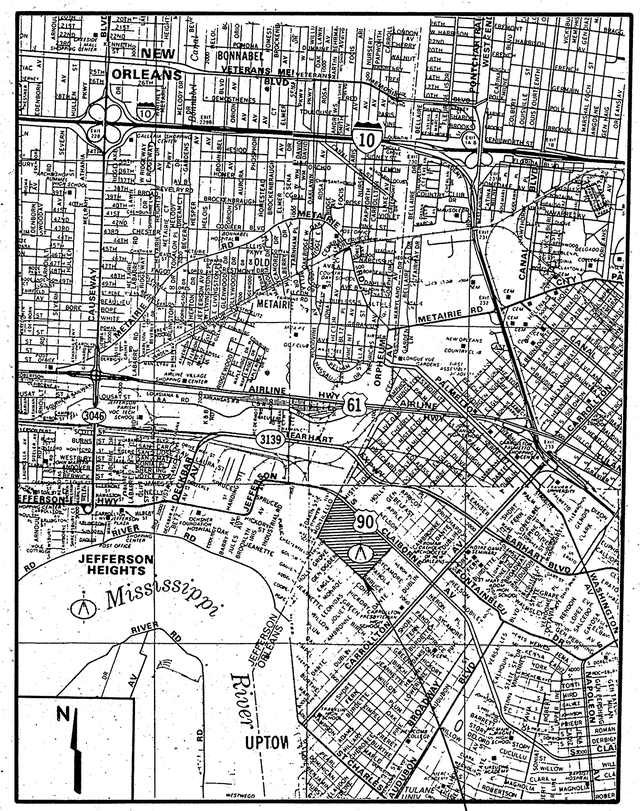

PROJECT LOCATION

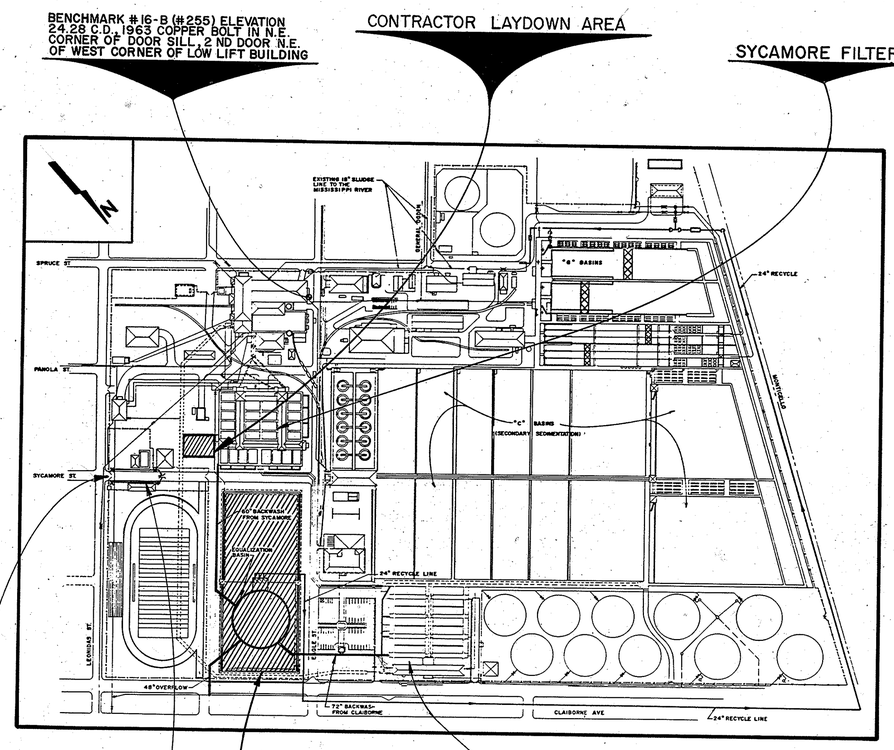

CONTRACTOR'S ACCESS

ACCESS FENCING

PROJECT SITE

CLAIBORNE FILTERS

INDEX TO DRAWINGS

Drawing No.	Sheet No.	Title
		General
11685-W-58	Sheet 1	G-1 Drawing Index & Location Plan
11685-W-58	Sheet 2	G-2 Process and Instrumentation Diagram
11685-W-58	Sheet 3	G-3 Hydraulic Profile
11685-W-58	Sheet 4	G-4 Log of Borings
11685-W-58	Sheet 5	G-5 Log of Borings
		Civil
11685-W-58	Sheet 6	C-1 Demolition Plan
11685-W-58	Sheet 7	C-2 Demolition Section
11685-W-58	Sheet 8	C-3 Site Plan - Location, Grading & Drainag
11685-W-58	Sheet 9	C-4 Sections
11685-W-58	Sheet 10	C-5 Details
11685-W-58	Sheet 11	C-6 Profile
		Mechanical
11685-W-58	Sheet 12	M-1 Piping Legend
11685-W-58	Sheet 13	M-2 Mechanical Plan
11685-W-58	Sheet 14	M-3 Recycle Pump Station - Plan & Section
11685-W-58	Sheet 15	M-4 Diversion Box/Venturi Pit
11685-W-58	Sheet 16	M-5 Claiborne Filter Modification
11685-W-58	Sheet 17	M-6 Mechanical Details
11685-W-58	Sheet 18	M-7 Mechanical Details
11685-W-58	Sheet 19	M-8 Mechanical Details
11685-W-58	Sheet 20-32	M-9 through M-21 Pipeline Plan and Profiles
		Architectural
11685-W-58	Sheet 33	A-1 Electrical Building Plan
11685-W-58	Sheet 34	A-2 Electrical Building - Elevations
11685-W-58	Sheet 35	A-3 Electrical Building - Sections
		Structural
11685-W-58	Sheet 36	S-1 Structural Notes and Work Sequence
11685-W-58	Sheet 37	S-2 Equalization Basin - Piling Plan
11685-W-58	Sheet 38	S-3 Equalization Basin - Joint Layout
11685-W-58	Sheet 39	S-4 Equalization Basin - Piping Orientation
11685-W-58	Sheet 40	S-5 Equalization Basin - Sections & Details
11685-W-58	Sheet 41	S-6 Equalization Basin - Sections & Details
11685-W-58	Sheet 42	S-7 Recycle Pump Station - Piling Plan
11685-W-58	Sheet 43	S-8 Recycle Pump Station - Plan & Section
11685-W-58	Sheet 44	S-9 Recycle Pump Station - Sections
11685-W-58	Sheet 45	S-10 Claiborne Drain Piping Modifications
11685-W-58	Sheet 46	S-11 Diversion Box/Venturi Pit
11685-W-58	Sheet 47	S-12 Bulkhead Plan & Sections
11685-W-58	Sheet 48	S-13 Details
11685-W-58	Sheet 49	S-14 Standard Details
	NA	~~S-15 - S-23~~ Included in This contract
		Electrical
4280-P-1	Sheet 50	E-1 Electrical - Site Plan
4280-P-2	Sheet 51	E-2 Electrical - One Line Diagram
4280-P-3	Sheet 52	E-3 Electrical - Substation Elevation
4280-P-4	Sheet 53	E-4 Electrical Building Floor Plan
4280-P-5	Sheet 54	E-5 Bubbler Panel
4280-P-6	Sheet 55	E-6 Electrical Details
4280-P-7	Sheet 56	E-7 Wiring Diagram
4280-P-8	Sheet 57	E-8 Wiring Diagram
4280-P-9	Sheet 58	E-9 Standard S&WB Details

"SUPPLEMENTAL" RECORD DRAWING INFORMATION

*SHEET 59	1 OF 4
*SHEET 60	2 OF 4
*SHEET 61	3 OF 4
*SHEET 62	4 OF 4

*THESE DRAWINGS ARE NOT PART OF THE CONTRACT DOCUMENTS AND ARE INCLUDED FOR INFORMATION ONLY.

RECORD DRAWING

These record drawings have been prepared based on information provided by others. The Engineer has not verified the accuracy of such information and shall not be responsible for any errors or omissions which may be incorporated herein as a result.

REV.	DATE	DESCRIPTION	BY

SEWERAGE AND WATER BOARD OF NEW ORLEANS

CARROLLTON FILTER BACKWASH RECYCLE FACILITY

CONTRACT NO. 1172

DRAWING INDEX & LOCATION PLAN

C & S CONSULTANTS, INC.
CONSULTING ENGINEERS

JMM James M. Montgomery
Consulting Engineers, Inc.
Metairie, Louisiana

STATE OF LOUISIANA
RONALD M. CASS
REG. No. 23376
PROFESSIONAL ENGINEER
CIVIL ENGINEERING
2/26/91

G-1

WARNING 0 1/2 1
IF THIS BAR DOES NOT MEASURE 1" THEN DRAWING IS NOT TO SCALE

SUBMITTED Ronald M. Cass 23376 2/26/91
PROJECT ENGINEER R.C.E. NO. DATE

RECOMENDED Ronald J. Bellard 2/26/91
JAMES M. MONTGOMERY CONSULTING ENGINEERS, INC. R.C.E. NO. DATE

DR. S.G.
TRC. ——
CK. R.C.
AP. R.C.
SCALE NONE
DATE 1/15/91

S. Joseph Sullivan
GENERAL SUPERINTENDENT

DWG. No. 11685-W-58

SET NO. SHEET NO. 1 OF 58

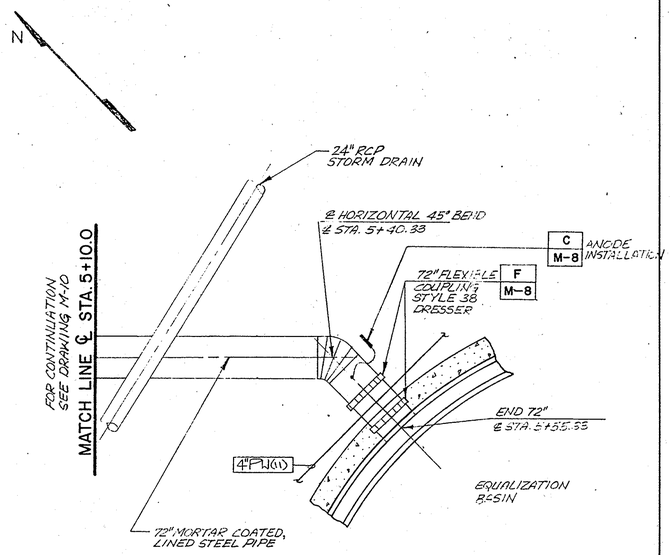

PLAN
SCALE: 1" = 10'

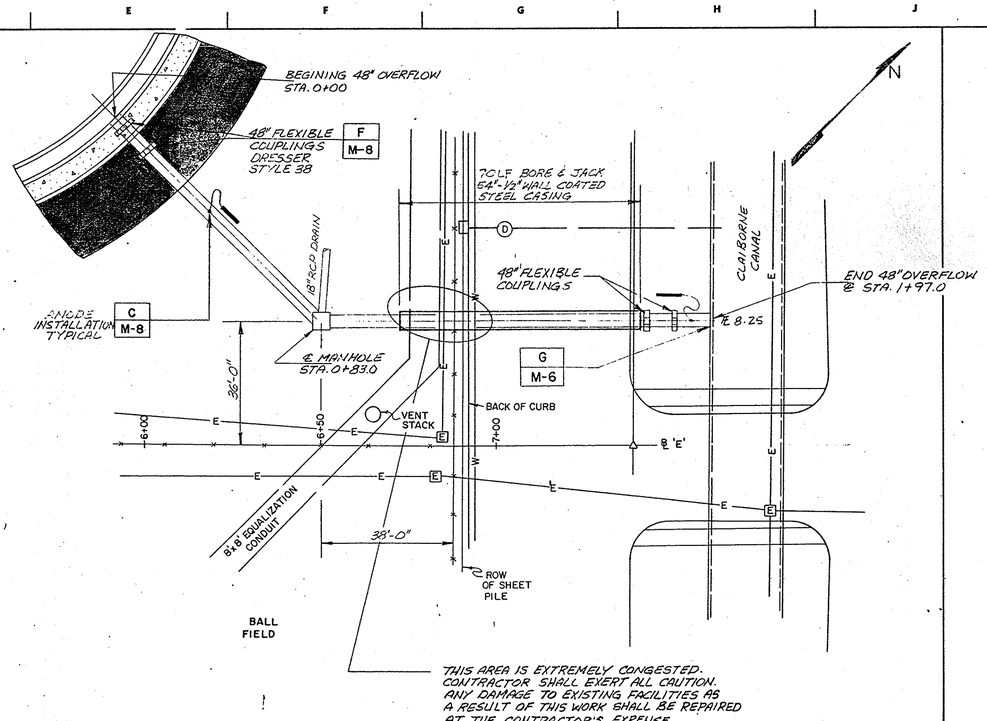

PLAN
SCALE: 1"=20'

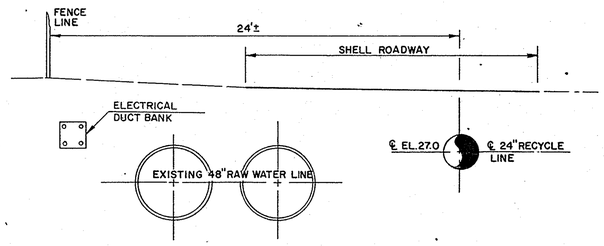

SECTION 1 M-19
SCALE: 1"=4'

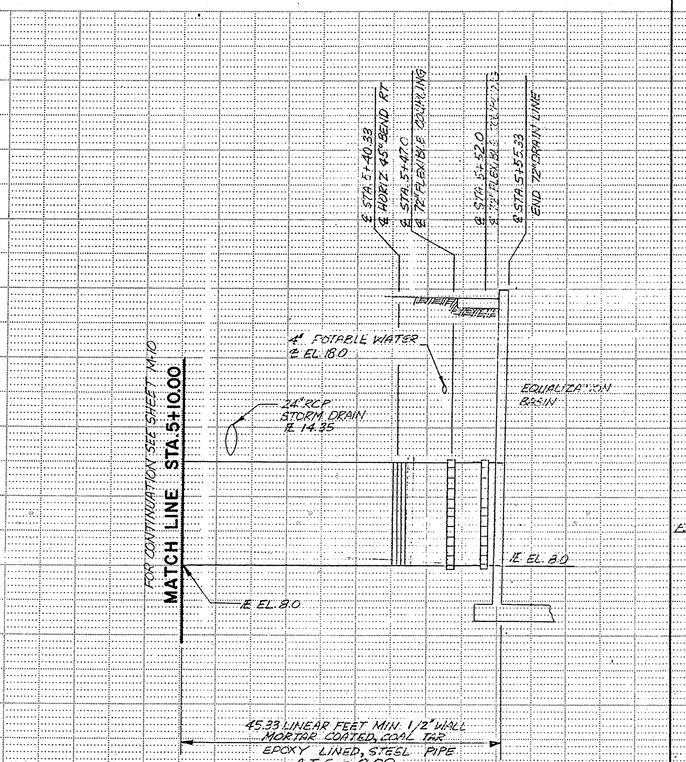

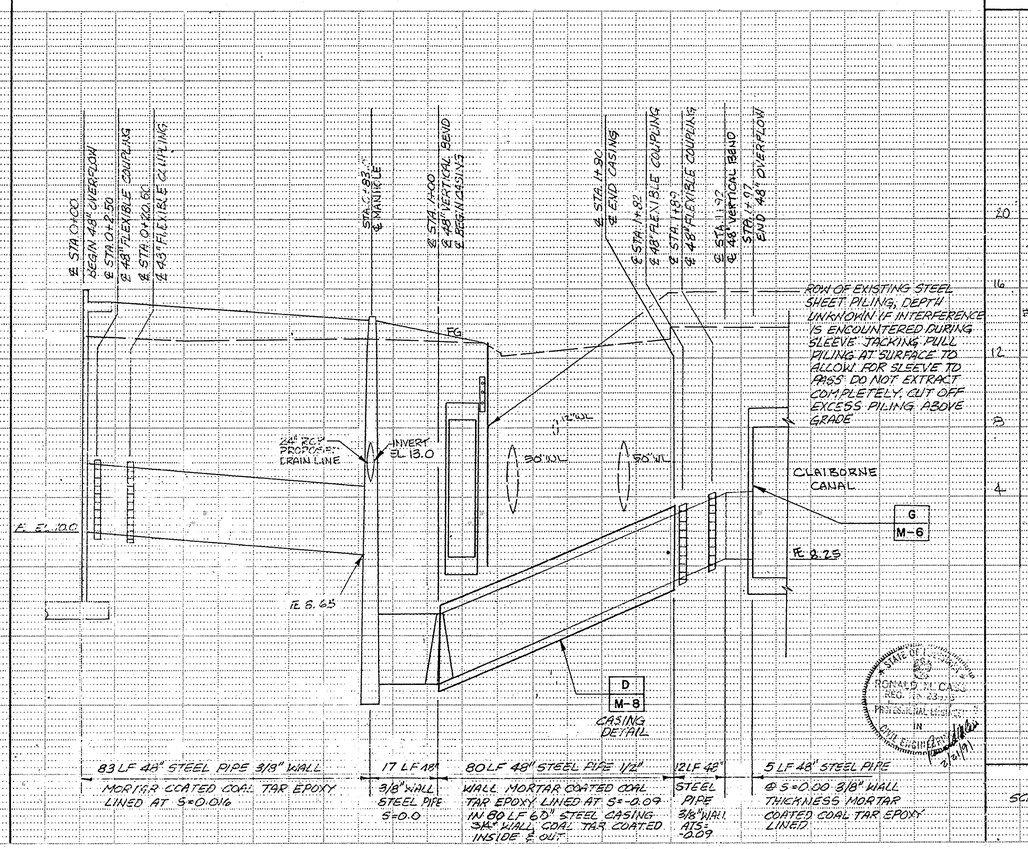

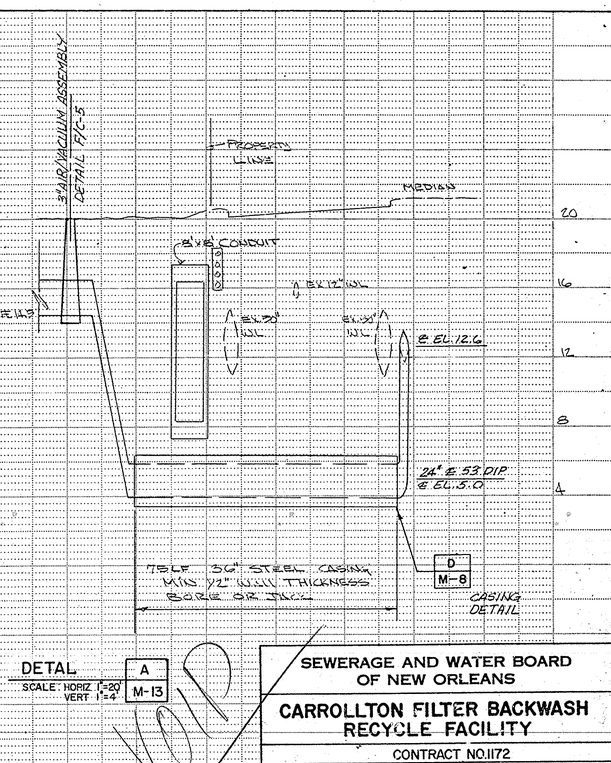

DETAIL A M-13
SCALE: HORIZ 1"=20' VERT 1"=4'

SCALE: HORIZ 1"=20' VERT. 1"=4'

M-11

SEWERAGE AND WATER BOARD OF NEW ORLEANS

CARROLLTON FILTER BACKWASH RECYCLE FACILITY

CONTRACT NO. 1172

DR. S.G.	GENERAL SUPERINTENDENT
TRC. —	
CK. R.C.	DWG. No. 11685-W-58
AP. R.C.	
SCALE AS SHOWN	SET NO. . SHEET NO. 22 OF 58
DATE 1/15/91	

AE 45959

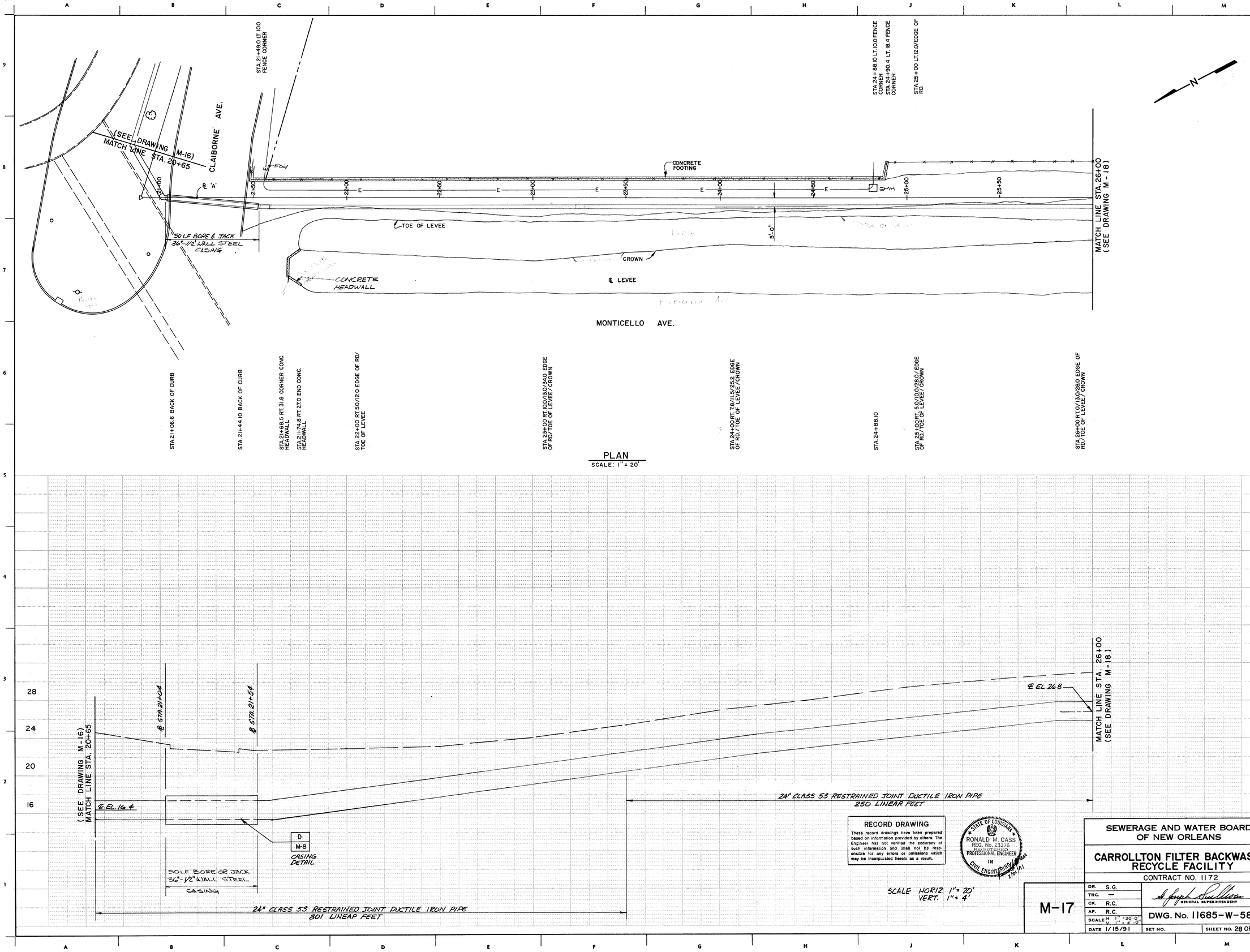

PLAN
SCALE: 1" = 20'

RECORD DRAWING

These record drawings have been prepared based on information provided by others. The Engineer has not verified the accuracy of such information and shall not be responsible for any errors or omissions which may be incorporated herein as a result.

STATE OF LOUISIANA
RONALD M. CASS
REG. No. 23376
REGISTERED
PROFESSIONAL ENGINEER
IN
CIVIL ENGINEERING
2/24/91

SCALE HORIZ. 1" = 20'
VERT. 1" = 4'

M-17

SEWERAGE AND WATER BOARD OF NEW ORLEANS

CARROLLTON FILTER BACKWASH RECYCLE FACILITY

CONTRACT NO. 1172

DR. S.G.	
TRC. —	
CK. R.C.	GENERAL SUPERINTENDENT
AP. R.C.	DWG. No. 11685-W-58
SCALE H 1" = 20'-0" V 1" = 4'-0"	
DATE 1/15/91	SET NO. / SHEET NO. 28 OF 58

STA. 26+00 LT. 12.0 EDGE OF RD.

STA. 26+66.0 LT. 14.9 EDGE OF CONC.

STA. 26+76.3 LT. 14.95 EDGE OF CONC.

STA. 27+00 LT. 13.5 EDGE OF RD.

STA. 28+00 LT. 12.0 EDGE OF RD.

STA. 29+00 LT. 11.4 EDGE OF RD.

STA. 30+00 LT. 11.3 EDGE OF RD.

STA. 30+44.0 LT. 14.30 EDGE OF CONC.

STA. 30+54.8 LT. 14.25 EDGE OF CONC.

STA. 31+00 LT. 12.0 EDGE OF RD.

STA. 32+00 LT. 6.6 EDGE OF RD.

N

(SEE DRAWING M-17) MATCH LINE STA. 26+00

26+50 | 5'-0" | 27+00 | 27+50 | 28+00 | 28+50 SHELL RD. | 29+00 | ℄ 'A' | 29+50 | 30+00 | 30+50 | 31+00 | 31+50

MATCH LINE STA. 32+00 (SEE DRAWING M-19)

SMALL DITCH

24" RECYCLE LINE

TOE OF LEVEE

TOE OF LEVEE

CROWN OF LEVEE

CROWN OF LEVEE

STA. 26+00 RT. 0/13.0/23.0 EDGE OF RD./TOE/CROWN

STA. 27+00 RT. 0/11.0/23.0 EDGE OF RD./TOE/CROWN

STA. 28+00 RT. 0/11.0/25.0 EDGE OF RD./TOE/CROWN

STA. 29+00 RT. 0/11.0/24.0 EDGE OF RD./TOE/CROWN

STA. 30+00 RT. 0/10.5/24.0 EDGE OF RD./TOE/CROWN

STA. 31+00 RT. 0/9.3/17.5 EDGE OF RD./TOE/CROWN

STA. 32+00 RT. 5.3/13.0/20.0 EDGE OF RD./TOE/CROWN

PLAN

SCALE: 1" = 20'

(SEE DRAWING M-17) MATCH LINE STA. 26+00

℄ EL. 26.8

24" CLASS 53 RESTRAINED JOINT DUCTILE IRON PIPE

600 L.F. 24" CLASS 53 RESTRAINED JOINT DUCTILE IRON PIPE

℄ EL. 26.8

MATCH LINE STA. 32+00 (SEE DRAWING M-19)

RECORD DRAWING

These record drawings have been prepared based on information provided by others. The Engineer has not verified the accuracy of such information and shall not be responsible for any errors or omissions which may be incorporated herein as a result.

STATE OF LOUISIANA
RONALD M. CASS
REG. No. 23376
REGISTERED PROFESSIONAL ENGINEER IN CIVIL ENGINEERING
5/2/91

SCALE: HORIZ. 1" = 20'
VERT. 1" = 4'

SEWERAGE AND WATER BOARD OF NEW ORLEANS

CARROLLTON FILTER BACKWASH RECYCLE FACILITY

CONTRACT NO. 1172

M-18

DR. S.G.
TRC. —
CK. R.C.
AP. R.C.
SCALE H 1" = 20'-0" V 1" = 4'-0"
DATE 1/15/91

GENERAL SUPERINTENDENT

DWG. No. 11685-W-58

SET NO.

SHEET NO. 29 OF 58

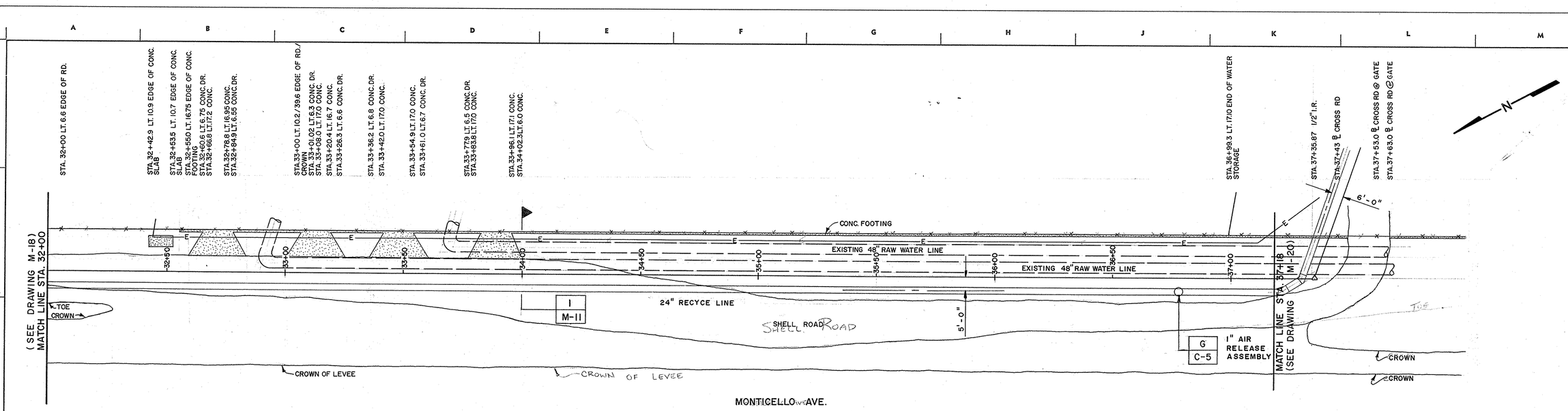

PLAN

SCALE: 1" = 20'

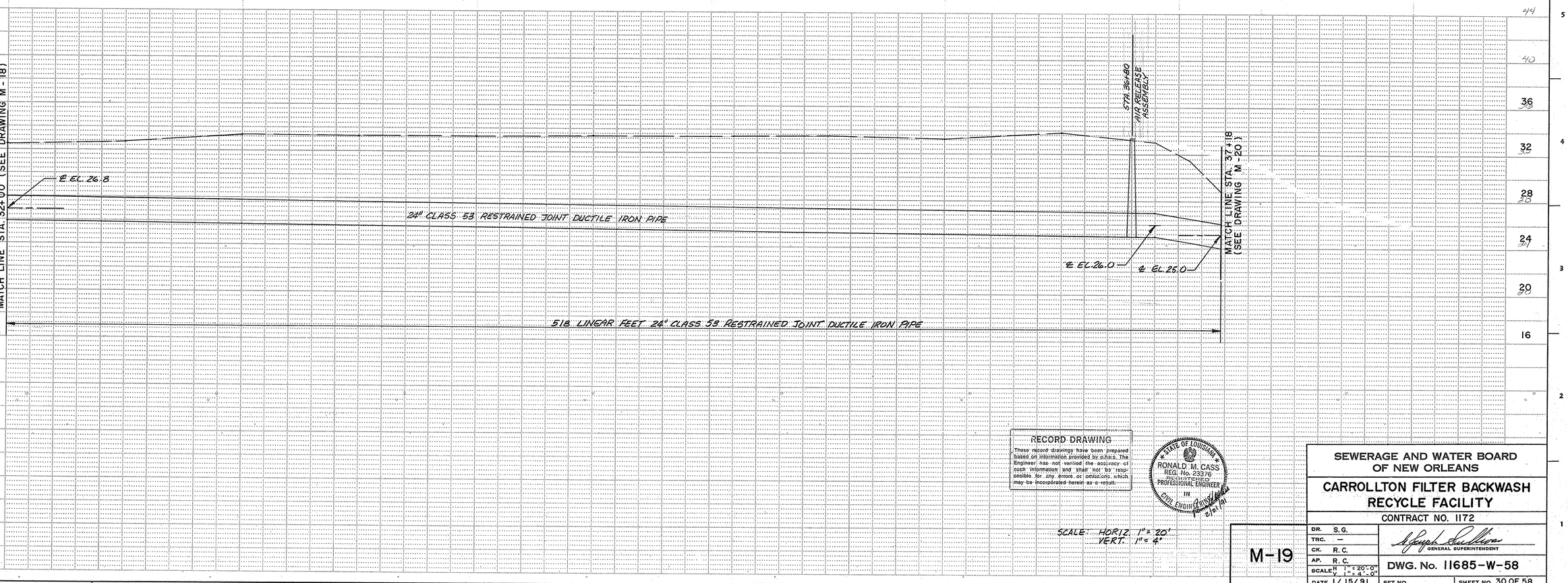

RECORD DRAWING

These record drawings have been prepared based on information provided by others. The Engineer has not verified the accuracy of such information and shall not be responsible for any errors or omissions which may be incorporated herein as a result.

STATE OF LOUISIANA
RONALD M. CASS
REG. No. 23376
REGISTERED PROFESSIONAL ENGINEER IN CIVIL ENGINEERING
2/21/91

SCALE: HORIZ. 1" = 20'
VERT. 1" = 4'

M-19

SEWERAGE AND WATER BOARD OF NEW ORLEANS

CARROLLTON FILTER BACKWASH RECYCLE FACILITY

CONTRACT NO. 1172

DR. S.G.	GENERAL SUPERINTENDENT
TRC. —	
CK. R.C.	
AP. R.C.	DWG. No. 11685-W-58
SCALE H 1" = 20'-0" V 1" = 4'-0"	
DATE 1/15/91	SET NO. SHEET NO. 30 OF 58

AP 459598

(SEE DRAWING M-19)
MATCH LINE STA. 37+18

N

"G" BASINS 'G' BASINS

FRENCH DRAINS TO REMAIN INTACT
REPAIR/REPLACE WHERE PROPOSED
PIPE LINE CROSSES TO MAINTAIN FUNCTION

B
M-6

℄ 45° WYE
@ STA. 38+25.0

C
M-6
ISOLATION
VALVE BOX

EXISTING ELEC. DUCTBANK

24"RECYCLE LINE

SHELL ROAD

EXISTING ELEC. DUCTBANK

6'-0"

E

MECHANICAL
JOINT PLUG

STA.42+73.9 LT.36.0
S&WB POWER

STA.42+92.3 LT.16.3/186
GUARD POST/COR.VALVE
BOX/COR.OF CONC.

STA.43+01.0 LT.16.8/186
GUARD POST/COR.OF VALVE
BOX

STA.43+20.9 LT.23.0 EDGE OF
RD.

℄ 45° WYE
@ STA. 42+78.0

MATCH ℄ LINE STA. 43+03
(SEE DRAWING M-21)

DRAIN LINE

TOE OF LEVEE

FENCE

FENCE

DIRT ROAD

ELECT VAULT

BLDG
BLDG.

STA.37+53.6 ℄ CROSSES FENCE

STA.37+87.70 RT.20.2 INTERSECTION SHELL RD.

STA.37+96.5 RT.6.4 INTERSECTION SHELL RD.

STA.38+10.6 RT.21.4 GUARD POST
STA.38+10.6 RT.22.4 COR.OF VAULT

STA.38+21.5 RT. 22.3 COR.OF VAULT
STA.38+22.4 RT.20.7 GUARD POST
STA.38+23.4 RT.64.9 BLDG.CORNER

STA.38+33.2 RT.50.3 GUARD POST
STA.38+34.5 RT.50.3 COR.OF ELEC. VAULT

STA.38+48.0 RT.5.5 S&WB POWER

STA.38+55.2 RT.16.5 GUARD POST
STA.38+57.4 RT.50.10 COR.OF VAULT
STA.38+60.1 ORT.21.4 COR.OF VAULT
STA.38+74.5 RT.20.8 COR.OF VAULT
STA.38+78.7 RT.16.3 GUARD POST

STA.38+95.2 RT.14.7/63.8 EDGE
SHELL RD./BLDG. CORNER

STA.39+13.0 RT.20.7 SHELL RD.
STA.39+16.5 RT.20.7 GUARD POST
STA.39+17.0 ORT.20.10 CORNER OF CONC.

STA.39+54.2 RT.20.7 CORNER OF CONC.
STA.39+65.0 RT.19.6 GUARD POST

STA.39+78.2 RT. 31.0 DRAIN INLET

STA.41+78.2 RT. 34.4 FENCE COR.
STA.41+93 RT. 18.4 SHELL WIDENS

STA.42+91.4 RT.15.0 COR.OF CONC.
STA.42+94.2 RT.11.9 GUARD POST
STA.42+96.5 RT.18.0 28"ø W/FLANGE & 2 VALVE

EXISTING 60" RAW WATER LINE

STA.43+04.4 RT 11.7 GUARD POST.
STA.43+07.4 RT.15.0 COR.OF CONC.

STA.43+17.4 RT.20.0 2" CONDUIT

STA.43+24.4 RT.40.0 OLD BROKEN CURB.
STA.43+27.3 RT.43.0 ℄ CATCH BASIN

PLAN
SCALE: 1"= 20'

(SEE DRAWING M-19)
MATCH LINE STA. 37+00

℄ EL. 25.0

EXISTING
ELECTRICAL
DUCT BANK

@ STA. 38+25.0

STA. 40+10 ISOLATION VALVE BOX

BASELINE PROFILE

MIN. 3' COVER

EXISTING ELECTRICAL
DUCT BANK

@ STA. 42+78

MATCH LINE STA. 43+03
(SEE DRAWING M-21)

EXISTING 54"
RAW WATER LINE

EXISTING
DUCT BANK

24" TO 'L' BASIN TIE IN
℄ EL. 20.5
SLOPE DOWN TO
℄ EL. 17.00 AT 48" TIE IN

24" RECYCLE LINE
TO 'G' BASINS
℄ EL. 16.50 SLOPE
UP TO EL. 19.00

℄ EL. 16.4

587 LINEAR FEET 24" CLASS 53 RESTRAINED JOINT DUCTILE IRON PIPE

RECORD DRAWING
These record drawings have been prepared based on information provided by others. The Engineer has not verified the accuracy of such information and shall not be responsible for any errors or omissions which may be incorporated herein as a result.

STATE OF LOUISIANA
RONALD M. CASS
REG. No. 23376
REGISTERED
PROFESSIONAL ENGINEER
IN
CIVIL ENGINEERING
3/24/91

SCALE: HORIZ. 1"= 20'
VERT. 1"= 4'

REV.	DATE	DESCRIPTION	BY
1	11-93	RECORD DRAWING REVISION	

SEWERAGE AND WATER BOARD
OF NEW ORLEANS

CARROLLTON FILTER BACKWASH RECYCLE FACILITY

CONTRACT NO. 1172

M-20

DR. S.G.
TRC. —
CK. R.C.
AP. R.C.
SCALE H 1"= 20'-0"
V 1"= 4'-0"
DATE 1/15/91

J. Joseph Sullivan
GENERAL SUPERINTENDENT

DWG. No. 11685-W-58

SET NO.

SHEET NO. 31 OF 58

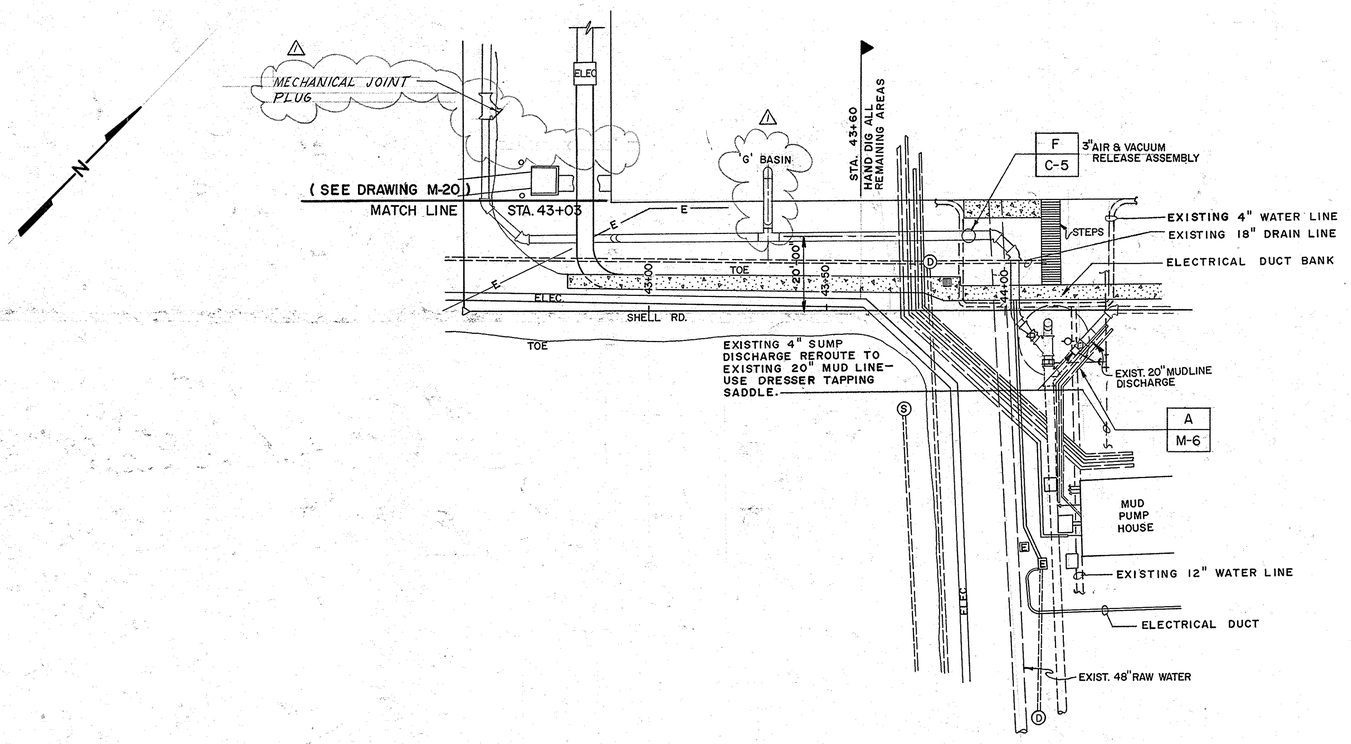

PLAN

SCALE: 1" = 20'-0"

HAND DIG ALL AREAS BEYOND STATION 43+60 TO AVOID DAMAGE TO EXISTING UTILITIES. VERIFY EXISTING LINE SIZE PRIOR TO CUT IN. INTERRUPTION OF EXISTING SERVICE WILL ONLY BE ALLOWED BY S&WB PESONNELL WITH SUFFICIENT PRIOR NOTICE, LINE OUTAGE SHALL NOT EXTEND BEYOND 4 HOURS.

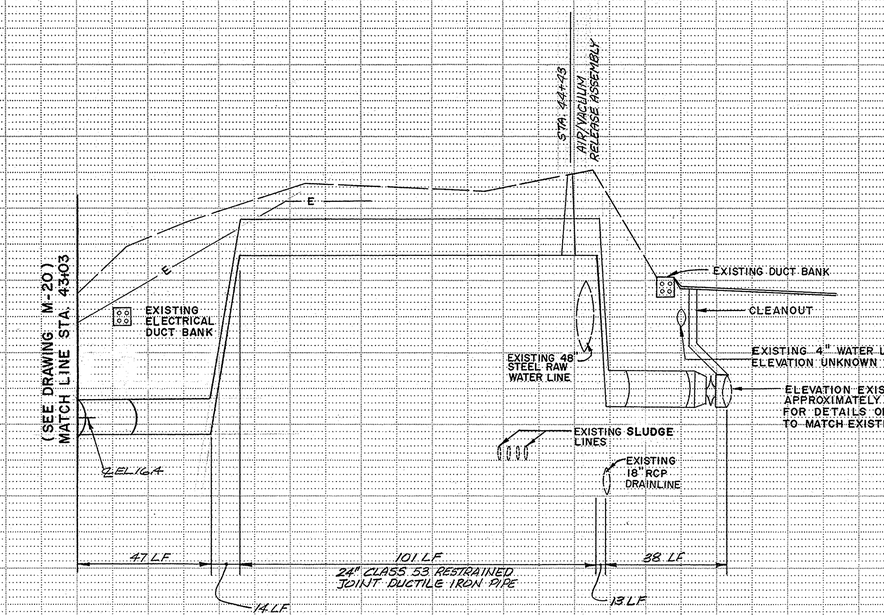

SCALE: HORIZ. 1" = 20'
VERT. 1" = 4'

RECORD DRAWING

These record drawings have been prepared based on information provided by others. The Engineer has not verified the accuracy of such information and shall not be responsible for any errors or omissions which may be incorporated herein as a result.

STATE OF LOUISIANA
RONALD M. CASS
REG. No. 23376
REGISTERED PROFESSIONAL ENGINEER IN CIVIL ENGINEERING
2/24/91

REV	DATE	DESCRIPTION	BY
1	11-93	RECORD DRAWING REVISION	

SEWERAGE AND WATER BOARD OF NEW ORLEANS

CARROLLTON FILTER BACKWASH RECYCLE FACILITY

CONTRACT NO. 1172

M-21

DR.	S.G.
TRC.	–
CK.	R.C.
AP.	R.C.
SCALE	H 1" = 20' V 1" = 4'
DATE	1/15/91

GENERAL SUPERINTENDENT

DWG. No. 11685-W-58

SET NO.

SHEET NO. 32 OF 58

SEWERAGE AND WATER BOARD OF NEW ORLEANS

FOR THE CONSTRUCTION OF

CONTRACT NO. 1369

HMGP EMERGENCY FUEL STORAGE
RETROFIT POWER PLANT
MAIN WATER PURIFICATION PLANT POWER COMPLEX

VICINITY MAP

NOT TO SCALE

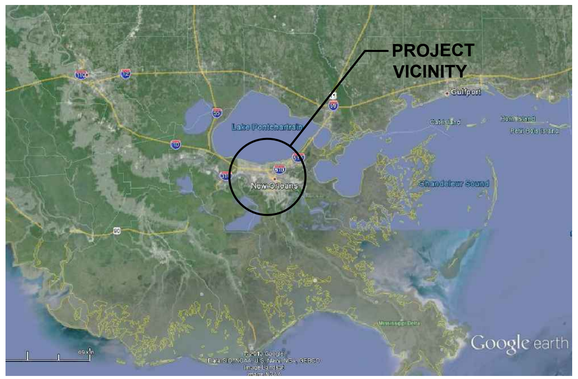

LOCATION MAP

NOT TO SCALE

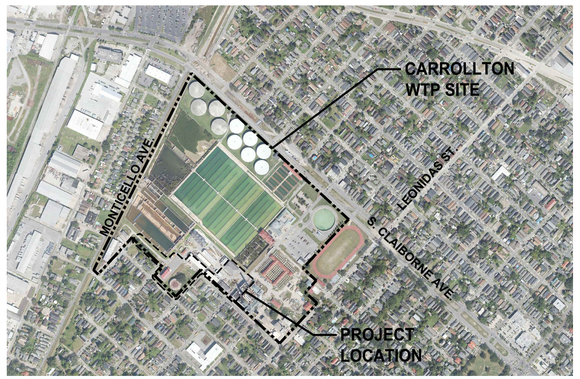

DRAWING INDEX

SHEET NO.	AEC NO.	GENERAL
1	GA–01	COVER, VICINITY MAP, LOCATION MAP, AND DRAWING INDEX
2	GA–02	GENERAL NOTES, LEGEND, AND ABBREVIATIONS
3	GA–03	CARROLLTON WTP OVERALL SITE PLAN
		CIVIL
4	CA–01	EXISTING SITE PLAN AND CIVIL NOTES
5	CA–02	FUEL STORAGE TANK AREA DEMOLITION PLAN
6	CA–03	DIESEL PUMP ROOM / DAY TANK AREA DEMOLITION PLAN
7	CA–04	EXISTING FUEL OIL PIPING PLAN
8	CA–05	EXISTING FUEL OIL PIPING SECTION / JACK AND BORE
9	CA–06	FUEL STORAGE TANK AREA ENLARGED SITE PLAN
10	CA–07	DIESEL PUMP ROOM / DAY TANK AREA ENLARGED SITE, YARD PIPING & GRADING PLAN
11	CA–08	FUEL STORAGE TANK AREA SITE GRADING PLAN AND YARD PIPING PLAN
12	CA–09	FIRE SUPPRESSION AND SUMP DETAILS
13	CA–10	SUMP DETAILS
14	CZ–01	CIVIL DETAILS
15	CZ–02	CIVIL DETAILS
		STRUCTURAL
16	SA–01	STRUCTURAL GENERAL NOTES
17	SA–02	FIRE SUPPRESSION AND WALL PENETRATIONS
18	SB–01	FUEL STORAGE TANK AREA SLOPING PLAN
19	SB–02	FUEL STORAGE TANK AREA PLAN
20	SB–03	FUEL STORAGE TANK AREA (TK–001) FOUNDATION PLAN
21	SB–04	FUEL STORAGE TANK AREA (TK–002) FOUNDATION PLAN
22	SB–05	FUEL STORAGE TANK AREA (TK–001) POST TENSION PLAN
23	SB–06	FUEL STORAGE TANK AREA (TK–002) POST TENSION PLAN
24	SB–07	FUEL STORAGE TANK AREA SECTIONS
25	SB–08	FUEL STORAGE TANK AREA SECTIONS AND DETAILS
26	SB–09	FUEL STORAGE TANK AREA STAIR DETAILS
27	SB–10	FUEL STORAGE TANK AREA CATWALK/STAIR/DETAILS
28	SB–11	FUEL STORAGE TANK AREA FUEL POLISHER PLATFORM
29	SC–02	DAY TANK (TK–003) PLAN AND SECTIONS
30	SC–03	DAY TANK (TK–003) FOUNDATION/PILE PLAN AND SECTIONS
31	SC–04	DAY TANK (TK–003) POST TENSION PLAN AND SECTIONS
		MECHANICAL
32	MA–01	MECHANICAL SYMBOLOGY AND LEGEND
33	MB–01	FUEL STORAGE TANK CONTAINMENT GENERAL ARRANGEMENT PLAN
34	MB–02	FUEL STORAGE TANK (TK–001) CONTAINMENT PLAN
35	MB–03	FUEL STORAGE TANK (TK–002) CONTAINMENT PLAN
36	MB–04	FUEL STORAGE TANK CONTAINMENT SECTIONS AND DETAILS
37	MB–05	FUEL STORAGE TANK (TK–001) NOZZLE & DESIGN DATA
38	MB–06	FUEL STORAGE TANK (TK–002) NOZZLE & DESIGN DATA
39	MC–01	DAY TANK (TK–003) PLAN, ELEVATION AND SECTION
40	MD–01	DIESEL PUMP ROOM – PIPE PENETRATIONS VALVE REPLACEMENT
41	MZ–01	MECHANICAL DETAILS
42	MZ–02	MECHANICAL DETAILS
		ELECTRICAL
43	EA–01	ELECTRICAL NOTES AND SYMBOLS SCHEDULES
44	EA–02	FUEL STORAGE TANKS ONE LINE DIAGRAM
45	EA–03	MCC–3 & G5 ONE LINE DIAGRAMS & EQUIPMENT LAYOUT
46	EA–04	OVERALL ELECTRICAL PLAN
47	EB–01	OIL WATER SEPARATOR SCHEMATIC & LOCAL CONTROL PANEL
48	EB–02	FUEL FORWARDING PUMPS & SUMP PUMP SCHEMATICS
49	EB–03	FUEL STORAGE TANKS SCHEMATIC
50	EB–04	FIRE ALARM CONTROL PANEL SYSTEM CONFIG. & WIRING DIAGRAM
51	EB–05	FUEL STORAGE & DAY TANKS GROUNDING PLANS
52	EB–06	FUEL STORAGE TANKS SITE PLAN LIGHTING & RECEPTACLES
53	EB–07	FUEL POLISHER PLATFORM LAYOUT FOAM TANK BOOSTER PUMP
54	EC–01	DAY TANK SCHEMATIC & LOCAL CONTROL PANEL
55	EC–02	DAY TANK SCHEMATIC & LOCAL CONTROL PANEL
56	EC–03	DAY TANK ELECTRICAL SITE PLAN
57	EC–04	BOILER HOUSE JB#1 (BOP–JB–001) WIRING DIAGRAM
58	EC–05	BOILER HOUSE JB#1 (BOP–JB–001) INTERCONNECT DIAGRAM
59	EZ–01	FUEL STORAGE TANKS / DAY TANK AREA CLASSIFICATION
60	EZ–02	CONDUIT & CABLE SCHEDULE
61	EZ–03	PANEL SCHEDULE & LIGHT FIXTURE SCHEDULE
62	EZ–04	ELECTRICAL DETAILS – SHEET 1
63	EZ–05	ELECTRICAL DETAILS – SHEET 2
64	EZ–06	ELECTRICAL DETAILS – SHEET 3
65	EZ–07	ELECTRICAL DETAILS – SHEET 4
66	EZ–08	ELECTRICAL DETAILS – SHEET 5
		INSTRUMENTATION
67	IA–01	PIPING INSTRUMENTATION DIAGRAM – SYMBOLOGY AND LEGEND
68	IB–01	FUEL STORAGE (TK–001 & TK–002) P&ID
69	IB–02	FIRE SUPPRESSION (TK–005) P&ID
70	IB–03	OIL–WATER SEPARATOR (TK–004) P&ID
71	IB–04	CN1352 PIPING SCHEMATIC – DIESEL TRANSFER PUMPS AND DRAIN SUMP
72	IC–01	DAY TANK (TK–003) P&ID

A

THESE COMPILED ENGINEERING AS–BUILT RECORD DRAWINGS ARE A COMPILATION OF A COPY OF THE ORIGINAL SEALED ENGINEERING DESIGN DRAWINGS FOR THIS PROJECT, MODIFIED BY ADDENDA, CHANGE ORDERS AND INFORMATION FURNISHED BY THE CONTRACTOR. THE INFORMATION SHOWN ON THESE COMPILED ENGINEERING AS–BUILT RECORD DRAWINGS THAT WAS PROVIDED BY THE CONTRACTOR OR OTHERS NOT ASSOCIATED WITH ME CANNOT BE VERIFIED FOR ACCURACY OR COMPLETENESS. MY COMPILATION OF THIS INFORMATION DOES NOT RELIEVE THE CONTRACTOR OF RESPONSIBILITY FOR ERRORS RESULTANT TO INCORRECT, INCOMPLETE OR OMITTED DATA ON THE CONTRACTOR'S AS–BUILT RECORD DRAWINGS – NOR DOES IT RELIEVE THE CONTRACTOR OF RESPONSIBILITY FOR NON–CONFORMANCE WITH THE ORIGINAL CONTRACT DOCUMENTS. THE ORIGINAL SEALED ENGINEERING DRAWINGS ARE ON FILE IN THE OFFICES OF THE SEWERAGE AND WATER BOARD.

REV.	DATE	DESCRIPTION	BY
A	10–25–19	AS–BUILT MARKUPS	LHN

SEWERAGE AND WATER BOARD OF NEW ORLEANS

CONTRACT No. 1369

HMGP EMERGENCY FUEL STORAGE
RETROFIT POWER PLANT
MAIN WATER PURIFICATION PLANT POWER COMPLEX

COVER, VICINITY MAP, LOCATION MAP AND DRAWING INDEX

THIS DOCUMENT ORIGINALLY ISSUED AND SEALED BY LISBETH HABANS NAGRATH, LICENCE No. 36792 ON 2-6-15. THIS DOCUMENT SHOULD NOT BE CONSIDERED A CERTIFIED DOCUMENT.

Trigon
Quality ▲ Commitment ▲ Client Service

TRIGON DWG. NO. GA-01

TRIGON ASSOCIATES, LLC
1515 POYDRAS STREET
SUITE 2200
NEW ORLEANS, LA 70112
TEL: 504-585-5767

trigonassociates.com

DR:	SJ CLARK
CK:	RA CASSANOVA
AP:	LH NAGRATH
LAST EDIT:	
SCALE:	NOT TO SCALE
DATE:	JANUARY 28, 2015

GENERAL SUPERINTENDENT

DWG. No. 12098-W8

SET NO: SHEET NO: 1 OF 72

GENERAL NOTES:

1. CONTRACTOR TO CONTACT THE SEWERAGE AND WATER BOARD (S&WB) PRIOR TO THE COMMENCEMENT OF ANY ACTIVITIES THAT MAY SUSPEND OPERATIONS.
2. COORDINATE WORK ACTIVITIES, INCLUDING ACCESS WITH THE S&WB AND OTHER CONTRACTORS WORKING IN THE AREA, AS REQUIRED BY SECTION 01 31 13 PROJECT COORDINATION.
3. THE CONTRACTOR IS RESPONSIBLE FOR REPAIRING ALL DAMAGE TO ADJACENT CONSTRUCTION AREAS AT NO ADDITIONAL COST TO THE S&WB AND SHALL BE LIABLE FOR ANY DAMAGE CAUSED BY FAILURE TO COMPLY WITH THESE INSTRUCTIONS.
4. THE CONTRACTOR IS RESPONSIBLE FOR DAMAGE TO EXISTING UTILITIES WHICH OCCUR BY THEIR FAULT DURING CONSTRUCTION AND SHALL IMMEDIATELY REPORT DAMAGE TO THE S&WB. ALL REPAIR COSTS SHALL BE BORNE BY THE CONTRACTOR.
5. THE CONTRACTOR SHALL NOTIFY THE S&WB IF THEY PLAN TO WORK ON AN S&WB HOLIDAY OR WEEKEND DAY. THE S&WB HAS THE FINAL AUTHORIZATION ON WORK PERFORMED NOT ON REGULAR WORK DAYS.
6. ALL WORK SHALL CONFORM TO THE CITY OF NEW ORLEANS DEPARTMENT OF PUBLIC WORKS, THE SEWERAGE AND WATER BOARD OF NEW ORLEANS, OCCUPATIONAL SAFETY AND HEALTH ADMINISTRATION (OSHA) STANDARDS AND STATE AND FEDERAL REGULATIONS.
7. THE CONTRACTOR SHALL FURNISH ALL LABOR, SUPERVISION, MATERIALS, AND EQUIPMENT REQUIRED FOR THE WORK DETAILED IN THE CONTRACT AND AS REQUIRED BY THESE DRAWINGS AND SPECIFICATIONS.
8. ALL WORKMANSHIP AND MATERIALS SHALL CONFORM TO THE SPECIFICATIONS OF THE SEWERAGE AND WATER BOARD EXCEPT AS NOTED.
9. DIMENSIONS AND/OR ELEVATIONS MARKED "NTS" ARE NOT SHOWN TO SCALE. DRAWINGS ARE GENERALLY TO SCALE BUT SHOULD NOT BE SCALED.
10. NOISE CONTROL – THE CONTRACTOR SHALL TAKE REASONABLE MEASURES TO AVOID UNNECESSARY NOISE APPROPRIATE FOR THE AMBIENT SOUND LEVELS IN THE AREA DURING WORK HOURS. ALL CONSTRUCTION MACHINERY AND VEHICLES SHALL BE EQUIPPED WITH PRACTICAL SOUND MUFFLING DEVICES AND OPERATED IN A MANNER TO CAUSE THE LEAST NOISE CONSISTENT WITH EFFICIENT PERFORMANCE OF THE WORK.
11. ALL UTILITIES TO REMAIN UNLESS NOTED OTHERWISE. THE LOCATION OF THE EXISTING UTILITIES SHOWN ARE BASED ON EXISTING RECORDS AND WHERE POSSIBLE MEASUREMENTS TAKEN IN THE FIELD. THE INFORMATION IS NOT TO BE RELIED ON AS BEING EXACT OR COMPLETE.
12. THE CONTRACTOR SHALL NOTIFY THE S&WB REPRESENTATIVE OF ANY UTILITIES FOUND ON THE SITE WHICH WERE NOT IDENTIFIED ON THE SURVEY PRIOR TO DEMOLITION.
13. SILT FENCES SHALL BE INSTALLED AROUND THE PERIMETER OF THE CONSTRUCTION AREA PRIOR TO ANY OTHER CONSTRUCTION IN ACCORDANCE WITH SECTION 01 57 13 TEMPORARY EROSION AND SEDIMENT CONTROL.
14. AT POINTS OF TIE–IN TO THE EXISTING SYSTEM, THE NEW PIPE MATERIAL SHOULD MATCH EXISTING PIPING IN SIZE AND SCHEDULE OR BE INSTALLED AS NOTED ON THE PIPING DRAWINGS.
15. THE CONTRACTOR WILL BE REQUIRED TO REPAIR, AT HIS OWN EXPENSE AND IN AN APPROVED MANNER, ALL DEFECTS IN WORKMANSHIP OR MATERIAL DISCLOSED BY INSPECTIONS PRIOR TO OBTAINING FINAL ACCEPTANCE. THE CONTRACTOR SHALL ALSO BEAR ALL COSTS ASSOCIATED WITH THE RE–TESTING, INCLUDING ANY COSTS INCURRED BY THE S&WB.
16. ALL REQUIRED DEMOLITION WORK SHALL BE INCLUDED IN THE BASE BID PACKAGE SUBMITTED BY THE CONTRACTOR.
17. PRIOR TO ANY DEMOLITION, CLEARING, OR EXCAVATION, THE CONTRACTOR SHALL LOCATE ALL UNDERGROUND UTILITIES BY CALLING LOUISIANA ONE CALL AT 811 OR 1–800–272–3020 AND THROUGH COORDINATION WITH THE S&WB.
18. DO NOT ALLOW MATERIAL AND DEBRIS GENERATED BY DEMOLITION ACTIVITIES TO ACCUMULATE ON THE JOB SITE. REMOVE DAILY AND DISPOSE OF IN A LEGAL MANNER. NO ONSITE SALE OF REMOVED ITEMS IS PERMITTED.
19. THE CONTRACTOR MUST TAKE ALL NECESSARY PRECAUTIONS TO ENSURE THE SAFETY OF THE PUBLIC AND/OR WORKERS ON THE SITE, AND TO PREVENT ACCIDENTS OR INJURY TO ANY PERSON ON, ABOUT OR ADJACENT TO THE WORK AREA.
20. THE SITE IS IN ZONE A1. ELEVATION 1.50 FEET, AS PER FLOOD INSURANCE RATE MAP COMMUNITY– PANEL NUMBER 255203 0160 E. EFFECTIVE DATE MARCH 1, 1984.
21. ANY WORK, CONSTRUCTION MATERIALS, FITTINGS, AND APPURTENANCES REQUIRED BY THE PLANS AND SPECIFICATIONS (INCLUDING FITTINGS AND MATERIALS AT ALL TIE–IN POINTS, TEMPORARY WORK, AND MATERIALS NEEDED TO ACCOMPLISH THE PROPOSED IMPROVEMENTS) AND NOT OTHERWISE IDENTIFIED IN THE PLANS, SHALL BE DEEMED INCIDENTAL TO CONSTRUCTION AND SHALL BE PERFORMED, SUPPLIED, AND INSTALLED AT NO ADDITIONAL COST TO THE OWNER.
22. SHOULD FIELD LOCATION OF EXISTING UTILITIES REQUIRE ADJUSTMENT TO PROPOSED UTILITY ALIGNMENT, CONTRACTOR SHALL PERFORM ADJUSTMENTS AS REQUIRED.
23. THE CONTRACTOR SHALL PROVIDE CONSTRUCTION AS BUILT DRAWINGS UPON COMPLETION.
24. SEE SECTION 05 12 00 FOR AWS SYMBOL LEGEND.

SITE ACCESS NOTES:

1. CONTRACTORS WILL PRESENT A GOVERNMENT ISSUED (STATE OR FEDERAL) ID. A PHOTOCOPY WILL BE MADE AND THE ID RETURNED TO THE INDIVIDUAL. THE FOLLOWING INFORMATION WILL BE PROVIDED AT THE TIME OF THE PHOTOCOPY: COMPANY NAME, SUPERVISOR'S NAME AND DAYTIME PHONE NUMBER, DATES (OR TIME FRAME) OF EXPECTED VISITS TO THE PLANT AND NAME OF S&WB EMPLOYEE SUPERVISING THE CONTRACT.
2. THE NAME WILL BE ADDED TO THE CONTRACTOR'S ENTRY LIST THAT IS AT EACH ENTRY GATE. WHEN THE CONTRACTOR ENTERS HE WILL BE REQUIRED TO SHOW HIS GOVERNMENT ISSUED I.D. WHICH WILL BE COMPARED WITH THE LIST. HIS ENTRY INTO THE PLANT WILL BE NOTED. ALL CONTRACTORS WILL DISPLAY A CONTRACTOR ISSUED ID AT ALL TIMES WHEN IN THE PLANT UNLESS IT IS UNSAFE TO DO SO.
3. IF THE CONTRACTOR NEEDS TO HAVE A VEHICLE ENTER THE PLANT ON A REGULAR BASIS THEY WILL NEED TO CONTACT TODD HATHEWAY FOR ISSUANCE OF THE VEHICLE PASS. ONLY THOSE VEHICLES THAT NEED TO BE USED TO BRING IN MATERIALS AND TOOLS ON A DAILY BASIS WILL BE ISSUED A VEHICLE PASS.
4. ALL CONTRACTOR EMPLOYEES SHALL PARK IN THE S&WB EMPLOYEE PARKING LOT (THE PARKING LOT TO THE LEFT WHEN ENTERING THE PLANT FROM CLAIBORNE AVE) AND ENTER THROUGH THE EMPLOYEE GATE.
5. IF ANY CONTRACTOR EMPLOYEE IS TERMINATED OR REASSIGNED, THE CONTRACTOR SHALL INFORM THE S&WB IMMEDIATELY TO REMOVE THE EMPLOYEE'S NAME FROM THE GATE LIST.
6. CONSTRUCTION ACCESS THROUGH THE GATE AT GENERAL OGDEN STREET AND SPRUCE STREET WILL BE PERMITTED. PROVIDE 72 HOURS NOTICE TO TODD HATHEWAY IF CONTRACTOR INTENDS FOR EMPLOYEES TO USE THESE GATES. GATE MUST BE STAFFED WITH SECURITY PERSONNEL WHEN IN USE.

SYMBOLOGY LEGEND

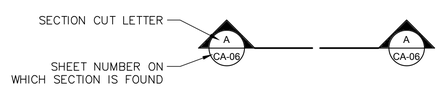

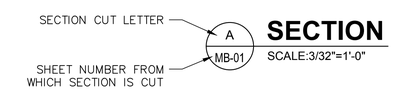

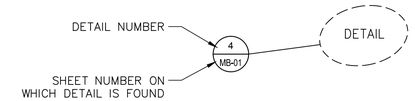

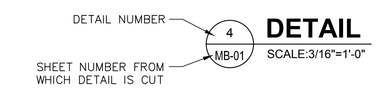

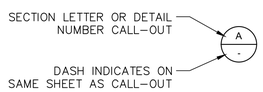

DRAWING NUMBERING SYSTEM

SEQUENTIAL SHEET NUMBER

DISCIPLINE
- G–GENERAL
- C–CIVIL
- S–STRUCTURAL
- M–MECHANICAL
- E–ELECTRICAL
- I–INSTRUMENTATION

M Z - 01

DENOTES AREA OR STANDARD DETAIL SHEETS
- A – GENERAL DISCIPLINE SHEETS
- B – EMERGENCY FUEL STORAGE TANK AREA
- C – DAY TANK / BOILER ROOM BASEMENT AREA
- Z – STANDARD DETAIL SHEETS

DEPICTED IS STANDARD MECHANICAL DETAIL SHEET NO 1

PROJECT ABBREVIATIONS:

#	NUMBER
&	AND
@	AT
%	PERCENT
℄	CENTER LINE
P̄L	PROPERTY LINE
'	FOOT; FEET
"	INCHES
A	AMPERE, AMPS
ADAAG	AMERICANS WITH DISABILITIES ACT ACCESSIBILITY GUIDELINES
ACI	AMERICAN CONCRETE INSTITUTE
AG	ABOVE GROUND
AWS	AMERICAN WELDING SOCIETY
BM	BENCHMARK
BOP	BALANCE OF PLANT
BOT	BOTTOM; BOTTOM OF TANK
BV	BALL VALVE
BYND	BEYOND
CC	CENTER TO CENTER
CFO	CLEAN FUEL OIL
CFPS	CERTIFIED FIRE PROTECTION SPECIALIST
CFR	CODE OF FEDERAL REGULATIONS
CL	CENTER LINE
CLR	CLEAR
CONC	CONCRETE
CONT	CONTINUOUS
CPLR	COUPLER
CPT	CONTROL POWER TRANSFORMER
CS	CARBON STEEL
CV	CHECK VALVE
CY	CUBIC YARDS
DI	DUCTILE IRON, DRAINAGE INLET
DISC	DISCONNECT
DV	DELUGE VALVE
DWG	DRAWING
EL	ELEVATION
ELEV	ELEVATION
EXT	EXTERIOR
EXT'G	EXISTING
FACP	FIRE ALARM CONTROL PANEL
FC	FOAM CONCENTRATE, FLEXIBLE CONNECTION
FFE	FINISH FLOOR ELEVATION
FLG	FLANGE
FLH	FLEXIBLE HOSE
FO	FUEL OIL
FS	FOAM SOLUTION
GALV	GALVANIZED
GPM	GALLONS PER MINUTE
GV	GATE VALVE
H	HORIZONTAL
HMGP	HAZARD MITIGATION GRANT PROGRAM
HO	HAND/OFF
HOA	HAND/OFF/AUTOMATIC
HP	HORSE POWER
HS	HAND SWITCH
HSS	HIGH STRENGTH STEEL
HWY	HIGHWAY
INV	INVERT
JB	JUNCTION BOX
KSI	KIPS PER SQUARE INCH
LAH	LEVEL ALARM HIGH
LAHH	LEVEL ALARM HIGH HIGH
LALL	LEVEL ALARM LOW LOW
LAX	LEAK ALARM
LCP	LOCAL CONTROL PANEL
LG	LONG
LG	LEVEL GAUGE
LI	LEVEL INDICATOR
LIT	LEVEL INDICATOR TRANSMIT
LPS	LIGHTNING PROTECTION SYSTEM
LSH	LEVEL SWITCH HIGH
LSHH	LEVEL SWITCH HIGH HIGH
LSLL	LEVEL SWITCH LOW LOW
LSX	LEAK SWITCH
MAX	MAXIMUM
MCC	MOTOR CONTROL CENTER
MD	MUD DISCHARGE
MIN	MINIMUM
MJ	MECHANICAL JOINT
NC	NORMALLY CLOSED
NO	NORMALLY OPEN, NUMBER
NTS	NOT TO SCALE
NV	NEEDLE VALVE
OC	ON CENTER
OE	OVERHEAD ELECTRIC
OSHA	OCCUPATIONAL HEALTH AND SAFETY STANDARDS
OW	OILY WATER
OWS	OIL–WATER SEPARATOR
P	PUMP
PCCP	PORTLAND CEMENT CONCRETE PAVEMENT
PE	POLYETHYLENE
PFO	POLISHED FUEL OIL
PL	PROPERTY LINE
PLC	PROGRAMMABLE LOGIC CONTROLLER
PSF	POUNDS PER SQUARE FOOT
PSI	POUNDS PER SQUARE INCH
PT	POST TENSION
PTI	POST TENSION INSTITUTE
PVC	POLYVINYL CHLORIDE
PW	POTABLE WATER
R	RADIUS
R/W	RIGHT–OF–WAY
RA	RELEASING AGENT
RED	REDUCER
RW	RAW WATER
SCH	SCHEDULE
SCP	STEEL CASING PIPE
SD	STORM DRAIN
SF	SAFETY FACTOR, SQUARE FEET
SIM	SIMILAR
SL	SLUDGE LINE
SS	SANITARY SEWER, STAINLESS STEEL
SWBNO	SEWERAGE AND WATER BOARD OF NEW ORLEANS
S&WB	SEWERAGE AND WATER BOARD OF NEW ORLEANS
T	TREAD(S), TELEPHONE, TONS
TK	TANK
TOC	TOP OF CURB, TOP OF CONCRETE
TOG	TOP OF GRATING
TOS	TOP OF SLAB
TP	TEST POINT
TW	TREATED WATER
TYP	TYPICAL
UG	UNDERGROUND
UGE	UNDERGROUND ELECTRIC
V	VOLTS/VERTICAL
VIF	VERIFY IN FIELD
VFD	VARIABLE FREQUENCY DRIVE
W	WEST, WIDE, WATTS
W/	WITH
WF	WIDE FLANGE
WL	WATERLINE
WW	WELDED WIRE
WWF	WELDED WIRE FABRIC
YC	EVENT CONTROL
YR	EVENT RECORD

REV.	DATE	DESCRIPTION	BY
A	10–25–19	AS–BUILT MARKUPS	LHN

A AS–BUILT REVISIONS NOT PROVIDED FOR THIS SHEET BY THE CONTRACTOR.

THIS DOCUMENT ORIGINALLY ISSUED AND SEALED BY LISBETH HABANS NAGRATH, LICENCE No. 36792 ON 2-6-15. THIS DOCUMENT SHOULD NOT BE CONSIDERED A CERTIFIED DOCUMENT.

Trigon
Quality ▲ Commitment ▲ Client Service
TRIGON DWG. NO. GA-02

TRIGON ASSOCIATES, LLC
1515 POYDRAS STREET
SUITE 2200
NEW ORLEANS, LA 70112
TEL: 504-585-5767
trigonassociates.com

SEWERAGE AND WATER BOARD OF NEW ORLEANS

CONTRACT No. 1369

HMGP EMERGENCY FUEL STORAGE RETROFIT POWER PLANT
MAIN WATER PURIFICATION PLANT POWER COMPLEX

GENERAL NOTES, LEGEND AND ABBREVIATIONS

DR.	SJ CLARK
CK:	RA CASSANOVA
AP:	LH NAGRATH
LAST EDIT:	
SCALE:	NONE
DATE:	JANUARY 28, 2015

GENERAL SUPERINTENDENT

DWG. No. 12098-W8

SET NO: SHEET NO: 2 OF 72

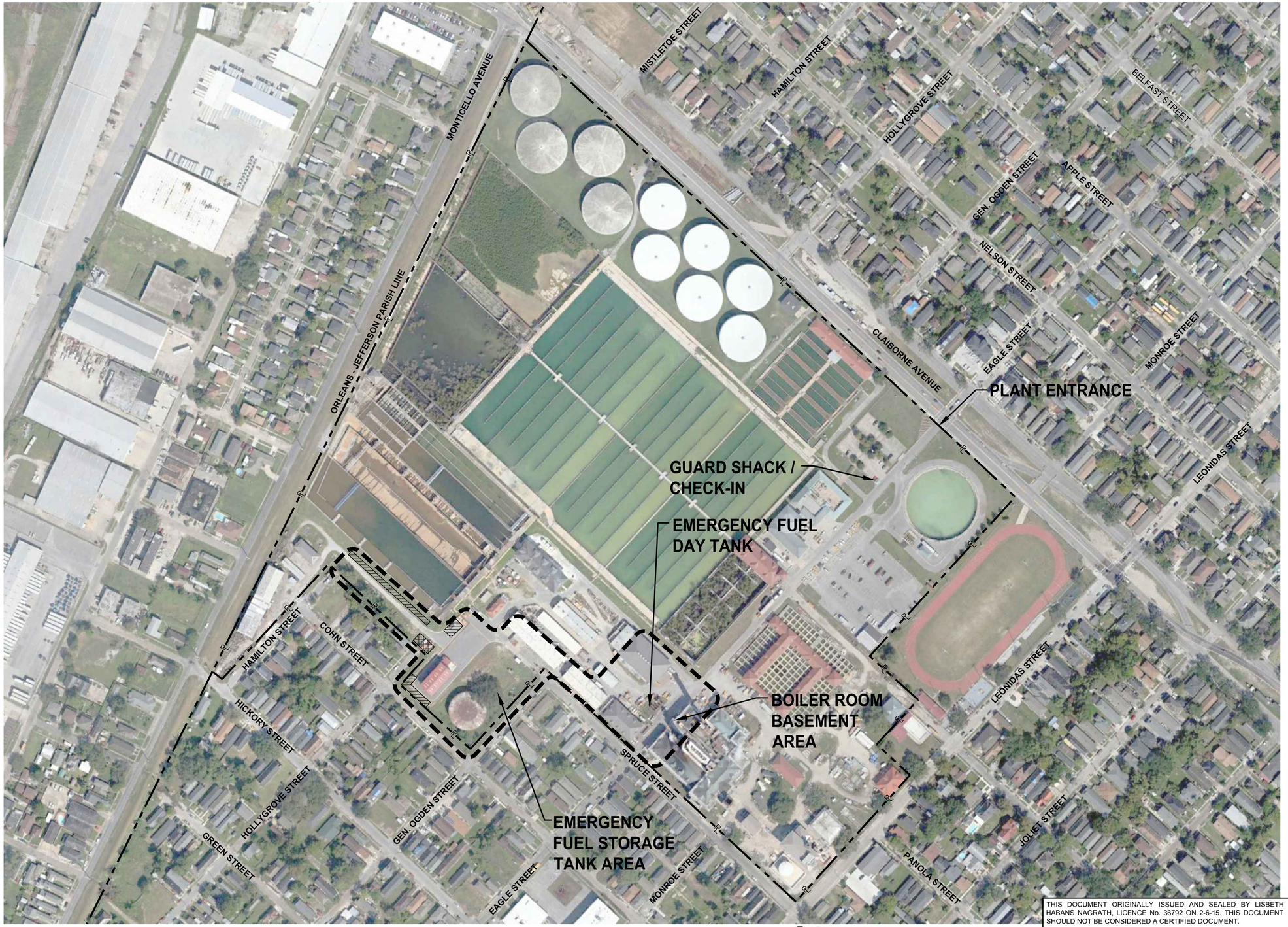

TRUE NORTH

PLANT NORTH

0 150 300

SCALE: 1" = 150'-0"

CONSTRUCTION LEGEND

LAYDOWN AREAS

CONSTRUCTION TRAILER AREA

A RECORD DRAWING INFORMATION NOT PROVIDED FOR THIS SHEET BY THE CONTRACTOR.

THIS DOCUMENT ORIGINALLY ISSUED AND SEALED BY LISBETH HABANS NAGRATH, LICENCE No. 36792 ON 2-6-15. THIS DOCUMENT SHOULD NOT BE CONSIDERED A CERTIFIED DOCUMENT.

Trigon
Quality ▲ Commitment ▲ Client Service

TRIGON DWG. NO. GA-03

TRIGON ASSOCIATES, LLC
1515 POYDRAS STREET
SUITE 2200
NEW ORLEANS, LA 70112
TEL: 504-585-5767
trigonassociates.com

REV.	DATE	DESCRIPTION	BY
A	10-25-19	AS-BUILT MARKUPS	LHN

SEWERAGE AND WATER BOARD OF NEW ORLEANS

CONTRACT No. 1369

HMGP EMERGENCY FUEL STORAGE
RETROFIT POWER PLANT
MAIN WATER PURIFICATION PLANT POWER COMPLEX

CARROLLTON WTP OVERALL SITE PLAN

DR.	SJ CLARK
CK:	RA CASSANOVA
AP:	LH NAGRATH
LAST EDIT:	
SCALE:	AS NOTED
DATE:	JANUARY 28, 2015

GENERAL SUPERINTENDENT

DWG. No. 12098-W8

SET NO: SHEET NO: 3 OF 72

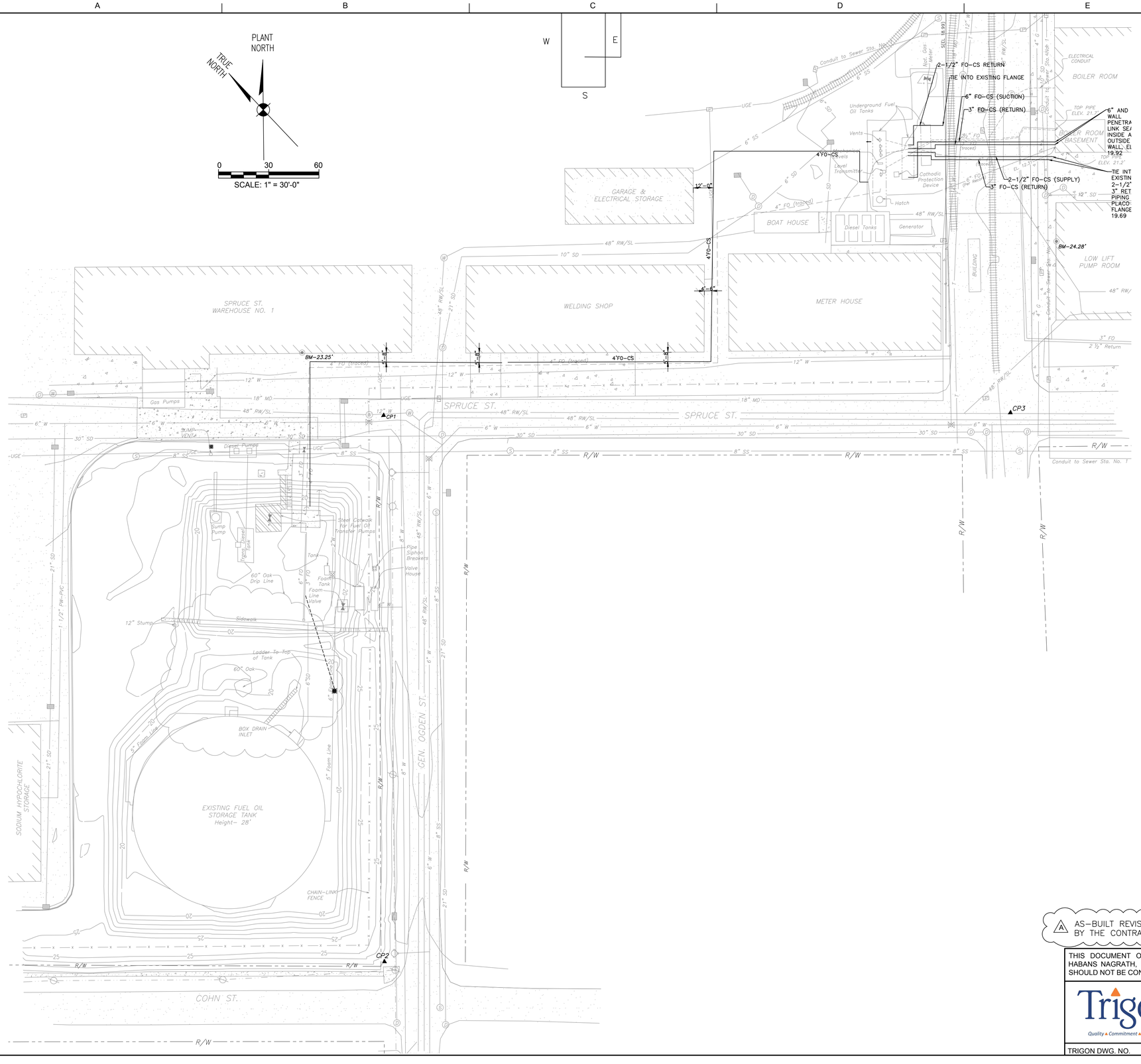

SITE SURVEY PROVIDED BY:

DALE STOCKSTILL & ASSOCIATES, P.A., PROFESSIONAL LAND SURVEYORS, 8054 HWY. 11, CARRIERE, MS 39426, PH:601-798-2326 AND SUBMITTED ON JANUARY 13, 2014.

SURVEYOR'S NOTES:

DATUMS:

THE COORDINATE DATUM USED IN THE DIGITAL VERSION OF THIS DRAWING IS LOUISIANA STATE PLANE COORDINATE SYSTEM, SOUTH ZONE, NAD 83, US SURVEY FEET AS DETERMINED BY STATIC GPS OBSERVATIONS PROCESSED THROUGH NGS'S OPUS SITE [WWW.NGS.NOAA.GOV/OPUS].

THE VERTICAL DATUM FOR THIS DRAWING IS CAIRO DATUM AS DETERMINED BY PLANT BENCHMARKS.

NOTES:

THE POINTS USED IN CREATING THE DIGITAL TERRAIN MODEL (DTM) WERE OBTAINED BY A COMBINATION OF REAL TIME KINEMATIC (RTK) GPS OBSERVATIONS AND TRIGONOMETRIC LEVELING USING A TOTAL STATION AND CONVENTIONAL SURVEYING METHODS.

THIS IS A TOPOGRAPHY SURVEY AND IS NOT INTENDED TO BE USED AS A BOUNDARY SURVEY.

UTILITY QUALITY LEVEL SHOWN ON DRAWING AS PER ASCE 38-02

UNDERGROUND UTILITIES ARE SHOWN AS PER RECORD DRAWINGS. NO PHYSICAL PIPE LOCATIONS WERE DETERMINED EXCEPT AS NOTED.

RIGHT-OF-WAY SOURCE:

THE RIGHT-OF-WAYS SHOWN ON WERE OBTAINED FROM THE CITY OF NEW ORLEANS GIS PARCEL SHAPE FILE DATED JUNE 20, 2014, LOCATED ON CITY WEB SITE [WWW.DATA.NOLA.GOV].

SURVEY CONTROL POINTS

▲ CONTROL POINT #1 (CP1)
MAG NAIL SET
N= 532371.8450
E= 3661746.3440
ELEV.= 21.82' CD
ELEV.= 0.295' NGVD 88
LAT.- 29°57'30.32"
LONG.- 90°07'49.50"

▲ CONTROL POINT #2 (CP2)
5/8" REBAR SET W/CAP
N= 532129.577
E= 3661526.1487
ELEV.= 21.76' CD
ELEV.= 0.312' NGVD 88
LAT.- 29°57'27.95"
LONG.- 90°07'52.03"

▲ CONTROL POINT #3 (CP3)
MAG NAIL SET
N= 532119.4129
E= 3662022.6461
ELEV.= 21.58 CD
LAT.- 29°57'27.95"
LONG.- 90°0746.39"

EXISTING SITE LEGEND

POWER POLE
OVERHEAD POWER LINE
TELEPHONE
LIGHT POLE
SINGLE LIGHT TRAFFIC SIGNAL
DRAIN INLET
6' CHAINLINK FENCE
BENCH MARK
SEWER MANHOLE
DRAINAGE MANHOLE
WATER MANHOLE
WATER METER
FIRE HYDRANT
WATER VALVE
POWER BOX
VALVE
TREE DRIP LINE
UNDERGROUND ELECTRIC
OVERHEAD ELECTRIC
ELEC. TRACED LINE
STORM DRAINAGE
SANITARY SEWER
WATERLINE
RAW WATER / SLUDGE LINE
MUD DISCHARGE
FUEL OIL
RIGHT-OF-WAY
FIN. FLR. ELEV. CONTROL POINT
ASHPALT
CONCRETE

REV.	DATE	DESCRIPTION	BY
A	10-25-19	AS-BUILT MARKUPS	LHN

AS-BUILT REVISIONS NOT PROVIDED FOR THIS SHEET BY THE CONTRACTOR.

THIS DOCUMENT ORIGINALLY ISSUED AND SEALED BY LISBETH HABANS NAGRATH, LICENCE No. 36792 ON 2-6-15. THIS DOCUMENT SHOULD NOT BE CONSIDERED A CERTIFIED DOCUMENT.

Trigon
Quality ▲ Commitment ▲ Client Service

TRIGON DWG. NO. CA-01

TRIGON ASSOCIATES, LLC
1515 POYDRAS STREET
SUITE 2200
NEW ORLEANS, LA 70112
TEL: 504-585-5767

trigonassociates.com

SEWERAGE AND WATER BOARD OF NEW ORLEANS

CONTRACT No. 1369

HMGP EMERGENCY FUEL STORAGE
RETROFIT POWER PLANT
MAIN WATER PURIFICATION PLANT POWER COMPLEX

EXISTING SITE PLAN AND CIVIL NOTES

DR:	SJ CLARK
CK:	RA CASSANOVA
AP:	LH NAGRATH
LAST EDIT:	
SCALE:	1"=30'-0"
DATE:	JANUARY 28, 2015

GENERAL SUPERINTENDENT

DWG. No. 12098-W8

SET NO: SHEET NO: 4 OF 72

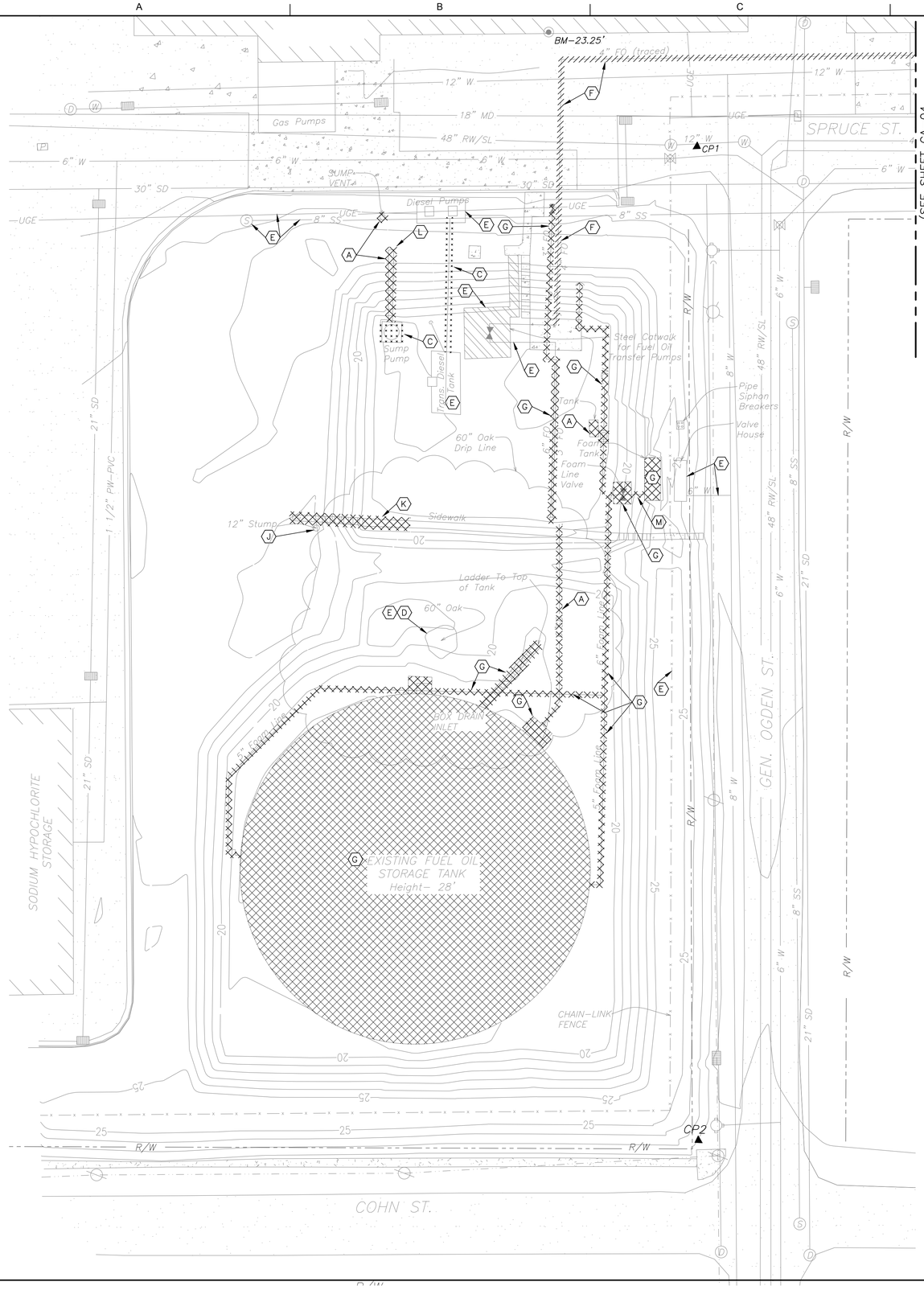

PLANT NORTH

TRUE NORTH

0 20 40

SCALE: 1" = 20'-0"

DEMOLITION LEGEND:

- TO BE REMOVED.
- TO BE RELOCATED.
- TO BE ABANDONED.

SEE SPECIFIC DEMOLITION NOTES FOR DESCRIPTION OF WORK TO BE PERFORMED.

(A) TO BE REMOVED FROM SITE.

(B) NOT USED.

(C) TO BE RELOCATED.

(D) PROVIDE TREE TRIMMING IN ACCORDANCE WITH SPECIFICATION SECTION 31 13 16.

(E) TO BE PROTECTED DURING CONSTRUCTION.

(F) TO BE ABANDONED. FILL WITH FLOWABLE MATERIAL (SAND/CEMENT MIXTURE) AND PLUG AT BOTH ENDS FOLLOWING INSTALLATION OF NEW LINE.

(G) TO BE REMOVED FROM SITE FOLLOWING TRANSFER OF FUEL OIL SERVICE.

(H) (NOT USED)

(I) (NOT USED)

(J) TO BE REMOVED FROM SITE, INCLUDING ROOTS AS REQUIRED FOR PILE DRIVING.

(K) TO BE REMOVED, AS REQUIRED FOR CONTAINMENT AND RE–GRADING.

(L) FIELD VERIFY LOCATION OF EXISTING SUMP DISCHARGE BELOW GRADE. REMOVE TO AVOID CONFLICT WITH NEW WORK. SHOULD EXISTING DRAIN LINE EXTEND BEYOND REQUIRED EXCAVATION, PLUG END.

(M) PROTECT EXISTING 6" WL FOR CONNECTION TO PROPOSED FIRE SUPPRESSION SYSTEM.

DEMOLITION NOTES:

1. SEE SPECIFICATION SECTION 01 31 13 PROJECT COORDINATION FOR CONSTRUCTION SEQUENCING.
2. DEMOLITION WORK SHALL BE IN ACCORDANCE WITH SPECIFICATION SECTION 02 41 00 DEMOLITION. SEE SPECIFICATION SECTION 02 65 00 UNDERGROUND AND ABOVEGROUND STORAGE TANK REMOVAL.
3. CONTRACTOR SHALL DEMOLISH THE EXISTING STEEL FUEL OIL TANK IN ACCORDANCE WITH ALL APPLICABLE LAWS AND REGULATIONS.
4. FUEL OIL IN EXISTING STORAGE TANK SHALL BE CLEANED AND TRANSFERRED TO NEW TANK (TK–001). THE APPROXIMATE LIQUID LEVEL IN TANK IS 6 FEET ABOVE THE FLOOR. THE S&WB ESTIMATES 3 FEET OF SLUDGE AND 3 FEET OF FUEL.
5. FUEL OIL SLUDGE DISPOSAL SHALL BE IN ACCORDANCE WITH SPECIFICATION SECTION 02 65 00.
6. SEE SHEET CA–01 FOR EXISTING SITE LEGEND.
7. ALL UTILITIES TO REMAIN UNLESS OTHERWISE NOTED.
8. FIELD VERIFY LOCATION OF EXISTING UTILITIES PRIOR TO START OF CONSTRUCTION.
9. PROVIDE TEMPORARY EROSION AND SEDIMENT CONTROL AND STORM WATER POLLUTION PREVENTION PLAN, USING BEST MANAGEMENT PRACTICES, IN ACCORDANCE WITH SPECIFICATION SECTION 01 57 13.

REV.	DATE	DESCRIPTION	BY
A	10–25–19	AS–BUILT MARKUPS	LHN

SEWERAGE AND WATER BOARD OF NEW ORLEANS

CONTRACT No. 1369

HMGP EMERGENCY FUEL STORAGE RETROFIT POWER PLANT
MAIN WATER PURIFICATION PLANT POWER COMPLEX

(A) AS–BUILT REVISIONS NOT PROVIDED FOR THIS SHEET BY THE CONTRACTOR.

THIS DOCUMENT ORIGINALLY ISSUED AND SEALED BY LISBETH HABANS NAGRATH, LICENCE No. 36792 ON 2-6-15. THIS DOCUMENT SHOULD NOT BE CONSIDERED A CERTIFIED DOCUMENT.

FUEL STORAGE TANK AREA DEMOLITION PLAN

Trigon — Quality ▲ Commitment ▲ Client Service

TRIGON DWG. NO. CA-02

TRIGON ASSOCIATES, LLC
1515 POYDRAS STREET
SUITE 2200
NEW ORLEANS, LA 70112
TEL: 504-585-5767

trigonassociates.com

DR:	SJ CLARK
CK:	RA CASSANOVA
AP:	LH NAGRATH
LAST EDIT:	
SCALE:	1"=20'-0"
DATE:	JANUARY 28, 2015

GENERAL SUPERINTENDENT

DWG. No. 12098-W8

SET NO: SHEET NO: 5 OF 72

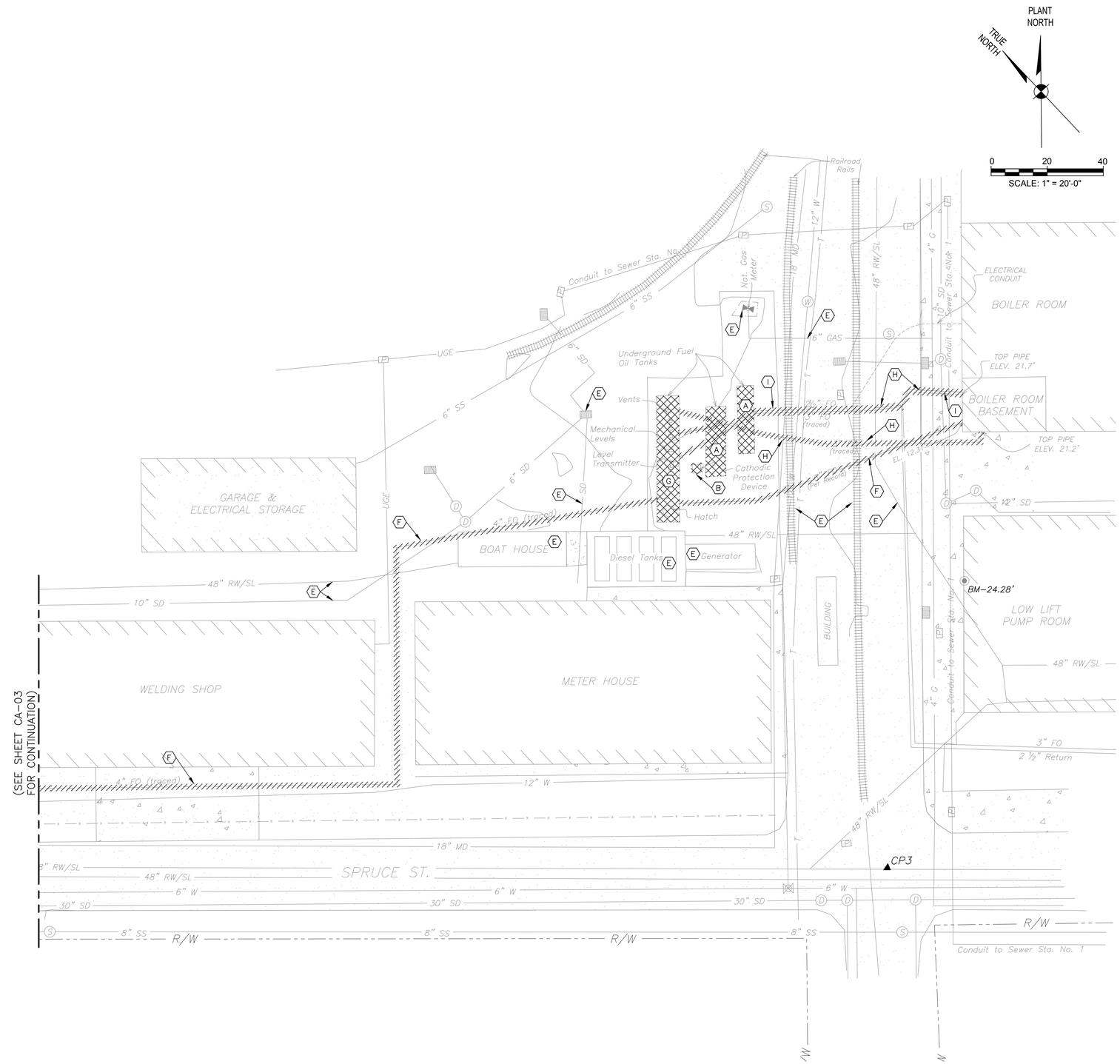

DEMOLITION LEGEND:

- TO BE REMOVED.
- TO BE RELOCATED.
- TO BE ABANDONED.

SEE SPECIFIC DEMOLITION NOTES FOR DESCRIPTION OF WORK TO BE PERFORMED.

- (A) TO BE REMOVED FROM SITE.
- (B) COORDINATE REMOVAL/RETURN OF ITEM TO S&WB.
- (C) (NOT USED)
- (D) (NOT USED)
- (E) TO BE PROTECTED DURING CONSTRUCTION.
- (F) TO BE ABANDONED. FILL WITH FLOWABLE MATERIAL (SAND/CEMENT MIXTURE) AND PLUG AT BOTH ENDS FOLLOWING INSTALLATION OF NEW LINE.
- (G) TO BE REMOVED FROM SITE FOLLOWING TRANSFER OF FUEL OIL SERVICE.
- (H) TO BE ABANDONED FOLLOWING INSTALLATION OF NEW LINES.
- (I) COORDINATE WITH S&WB DURING REMOVAL OF FUEL OIL LINES TO VERIFY LEVEL OF SERVICE OF EXISTING ADJACENT COMPRESSED AIR LINES. EXISTING FUEL LINES TO AND FROM GAS TURBINE ARE TO REMAIN.

DEMOLITION NOTES:

1. SEE SPECIFICATION SECTION 01 31 13 PROJECT COORDINATION FOR CONSTRUCTION SEQUENCING.
2. DEMOLITION WORK SHALL BE IN ACCORDANCE WITH SPECIFICATION SECTION 02 41 00 DEMOLITION. SEE SPECIFICATION SECTION 02 65 00 UNDERGROUND AND ABOVEGROUND STORAGE TANK REMOVAL.
3. THREE (3) EXISTING UNDERGROUND STORAGE TANKS SHALL BE REMOVED. THE LARGEST TANK (15,000 GALLONS) IS CURRENTLY IN-SERVICE. FUEL FROM THE IN-SERVICE TANK SHALL BE TRANSFERRED TO TEMPORARY TRAILER TANK(S) WITH TEMPORARY PIPING TO THE DIESEL PUMP ROOM DURING DEMOLITION AND CONSTRUCTION. CONTRACTOR TO PROVIDE DETACHABLE FLEXIBLE HOSES TO ALLOW REPOSITIONING OF TEMPORARY TANK. (1)
4. SEE SHEET CA-01 FOR EXISTING SITE LEGEND.
7. ALL UTILITIES TO REMAIN UNLESS OTHERWISE NOTED.
8. FIELD VERIFY LOCATION OF EXISTING UTILITIES PRIOR TO START OF CONSTRUCTION.
9. PROVIDE TEMPORARY EROSION AND SEDIMENT CONTROL AND STORM WATER POLLUTION PREVENTION PLAN, USING BEST MANAGEMENT PRACTICES, IN ACCORDANCE WITH SPECIFICATION SECTION 01 57 13.

(A) AS-BUILT REVISIONS NOT PROVIDED FOR THIS SHEET BY THE CONTRACTOR.

REV.	DATE	DESCRIPTION	BY
A	10-25-19	AS-BUILT MARKUPS	LHN
1	3-19-15	REVISED NOTE 3 AND REMOVED RAIL OPTION (ADD.2)	LHN

SEWERAGE AND WATER BOARD OF NEW ORLEANS

CONTRACT No. 1369

HMGP EMERGENCY FUEL STORAGE
RETROFIT POWER PLANT
MAIN WATER PURIFICATION PLANT POWER COMPLEX

DIESEL PUMP ROOM/DAY TANK AREA DEMOLITION PLAN

THIS DOCUMENT ORIGINALLY ISSUED AND SEALED BY LISBETH HABANS NAGRATH, LICENCE No. 36792 ON 2-6-15. THIS DOCUMENT SHOULD NOT BE CONSIDERED A CERTIFIED DOCUMENT.

Trigon
Quality ▲ Commitment ▲ Client Service

TRIGON ASSOCIATES, LLC
1515 POYDRAS STREET
SUITE 2200
NEW ORLEANS, LA 70112
TEL: 504-585-5767

trigonassociates.com

TRIGON DWG. NO. CA-03

DR:	SJ CLARK
CK:	RA CASSANOVA
AP:	LH NAGRATH
LAST EDIT:	
SCALE:	1"=20'-0"
DATE:	JANUARY 28, 2015

GENERAL SUPERINTENDENT

DWG. No. 12098-W8

SET NO: SHEET NO: 6 OF 72

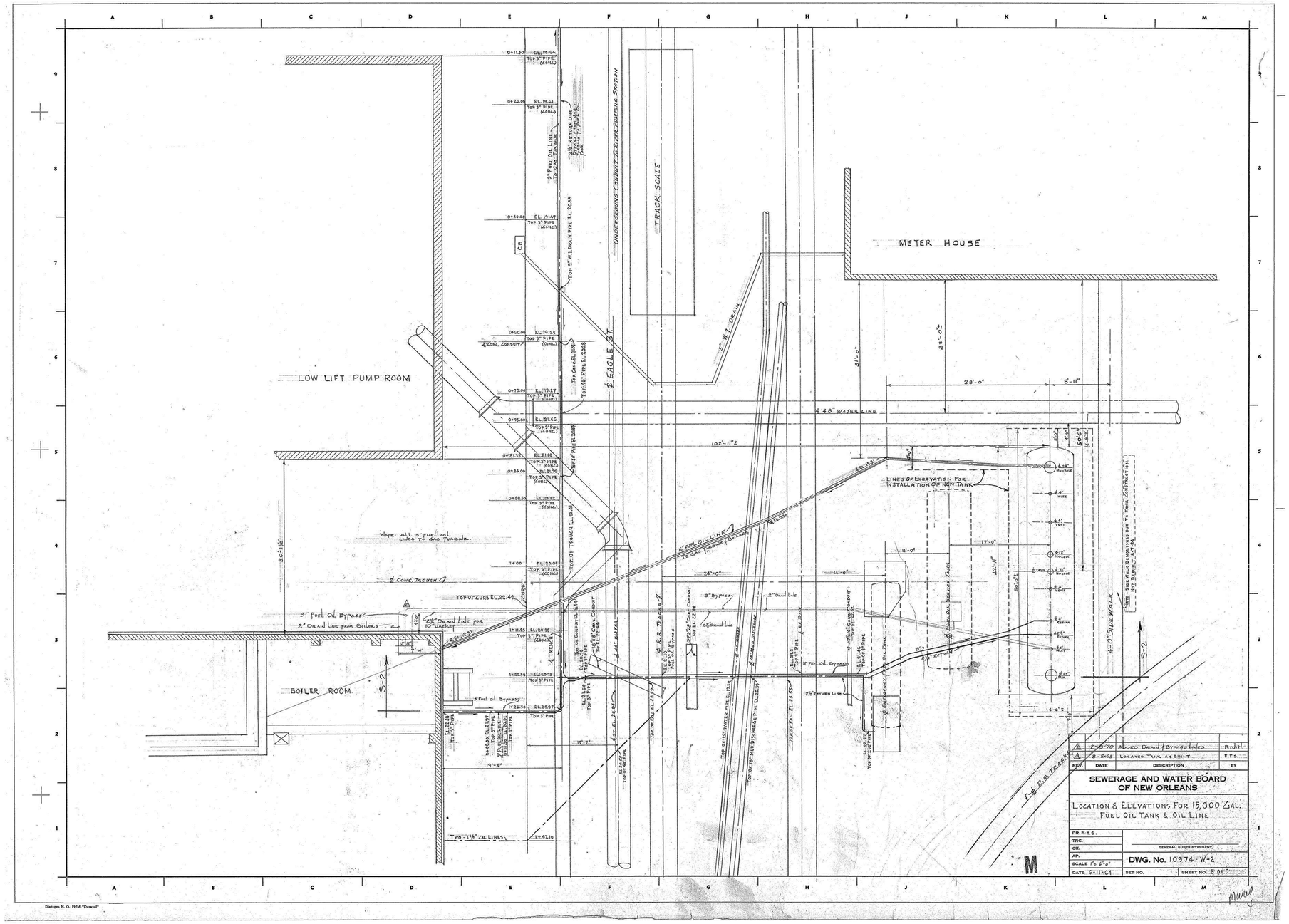

REV.	DATE	DESCRIPTION	BY
A	12-6-70	Added Drain & Bypass Lines	R.J.H.
A	8-1-63	Located Tank As Built	F.T.S.

SEWERAGE AND WATER BOARD OF NEW ORLEANS

LOCATION & ELEVATIONS FOR 15,000 GAL. FUEL OIL TANK & OIL LINE

DR. F.T.S.	
TRC.	
CK.	GENERAL SUPERINTENDENT
AP.	DWG. No. 10974-W-2
SCALE 1"= 6'-0"	
DATE 6-11-64	SET NO. SHEET NO. 2 OF 5

DRAWING NO. 10974-W2 SHEET 2 OF 5

FOR REFERENCE ONLY

⚠ AS-BUILT REVISIONS NOT PROVIDED FOR THIS SHEET BY THE CONTRACTOR.

Trigon
Quality ▲ Commitment ▲ Client Service

TRIGON DWG. NO. CA-04

TRIGON ASSOCIATES, LLC
1515 POYDRAS STREET
SUITE 2200
NEW ORLEANS, LA 70112
TEL: 504-585-5767

trigonassociates.com

REV.	DATE	DESCRIPTION	BY
A	10-25-19	AS-BUILT MARKUPS	LHN

SEWERAGE AND WATER BOARD OF NEW ORLEANS

CONTRACT No. 1369

HMGP EMERGENCY FUEL STORAGE
RETROFIT POWER PLANT
MAIN WATER PURIFICATION PLANT POWER COMPLEX

EXISTING FUEL OIL PIPING PLAN

DR:	SJ CLARK
CK:	RA CASSANOVA
AP:	LH NAGRATH
LAST EDIT:	
SCALE:	NOT TO SCALE
DATE:	JANUARY 28, 2015

GENERAL SUPERINTENDENT

DWG. No. 12098-W8

SET NO: SHEET NO: 7 OF 72

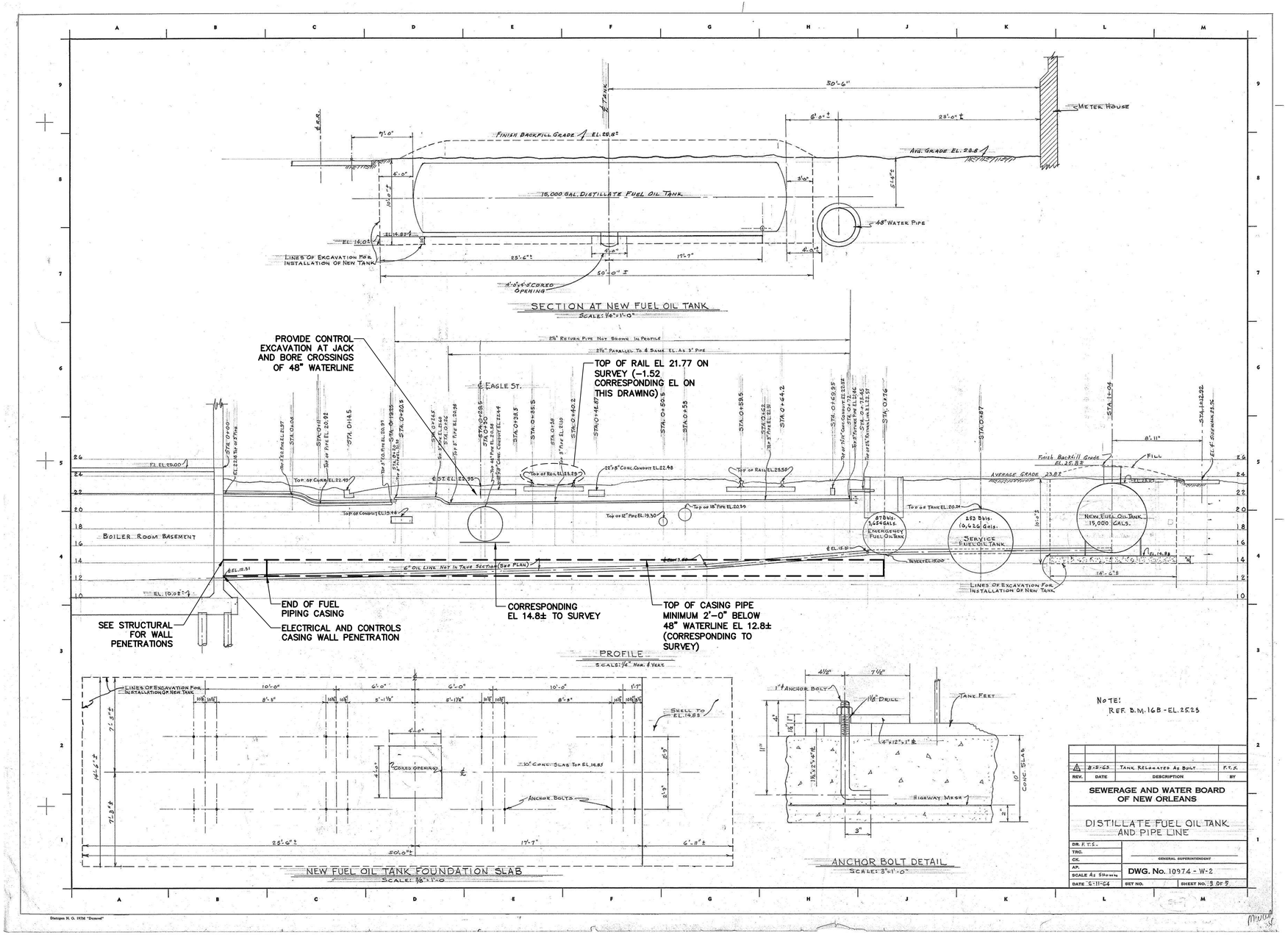

NOTE:
REF. B.M. 16B - EL. 25.23

REV.	DATE	DESCRIPTION	BY
A	8-25-65	TANK RELOCATED AS BUILT	F.T.S.

SEWERAGE AND WATER BOARD OF NEW ORLEANS

DISTILLATE FUEL OIL TANK AND PIPE LINE

DR. F.T.S.	
TRC.	
CK.	GENERAL SUPERINTENDENT
AP.	DWG. No. 10974-W-2
SCALE As Shown	
DATE 6-11-64	SET NO. SHEET NO. 3 OF 5

Dietzgen N. O. 19758 "Duoprint"

DRAWING NO. 10974-W2 SHEET 3 OF 5

A JACK AND BORE REPLACED WITH OPEN CUT PER FCO-009/RFQ-001. SEE SUL-0243 FRO HAND SKETCHED RECORD DRAWINGS.

NOTES:

1. THE BACKGROUND SHOWN ON THIS DRAWING IS A COPY OF SWBNO DRAWING 10974-W-2, SHEET 3 OF 5, DATED 6-11-64. THIS BACKGROUND HAS BEEN INCLUDED FOR REFERENCE ONLY.
2. ELEVATIONS SHOWN ON REFERENCE DRAWING DO NOT CORRESPOND TO SURVEY DATUM. FIELD VERIFY ELEVATION OF PROPOSED CASING PIPES. TOP OF CASING PIPES SHALL BE MINIMUM 2'-0" BELOW 48" WATERLINE. PROVIDE CONTROL EXCAVATION TO VERIFY LOCATION OF 48" WATERLINE AND TO ENSURE DISTANCE OF CASING PIPE FROM BOTTOM OF 48" WATERLINE.

REV.	DATE	DESCRIPTION	BY
A	10-25-19	AS-BUILT MARKUPS	LHN

SEWERAGE AND WATER BOARD OF NEW ORLEANS

CONTRACT No. 1369

HMGP EMERGENCY FUEL STORAGE
RETROFIT POWER PLANT
MAIN WATER PURIFICATION PLANT POWER COMPLEX

EXISTING FUEL OIL PIPING SECTION / JACK AND BORE

THIS DOCUMENT ORIGINALLY ISSUED AND SEALED BY LISBETH HABANS NAGRATH, LICENCE No. 36792 ON 2-6-15. THIS DOCUMENT SHOULD NOT BE CONSIDERED A CERTIFIED DOCUMENT.

Trigon
Quality ▲ Commitment ▲ Client Service

TRIGON DWG. NO. CA-05

TRIGON ASSOCIATES, LLC
1515 POYDRAS STREET
SUITE 2200
NEW ORLEANS, LA 70112
TEL: 504-585-5767
trigonassociates.com

DR.	SJ CLARK
CK:	RA CASSANOVA
AP:	LH NAGRATH
LAST EDIT:	
SCALE:	NOT TO SCALE
DATE:	JANUARY 28, 2015

GENERAL SUPERINTENDENT

DWG. No. 12098-W8

SET NO: SHEET NO: 8 OF 72

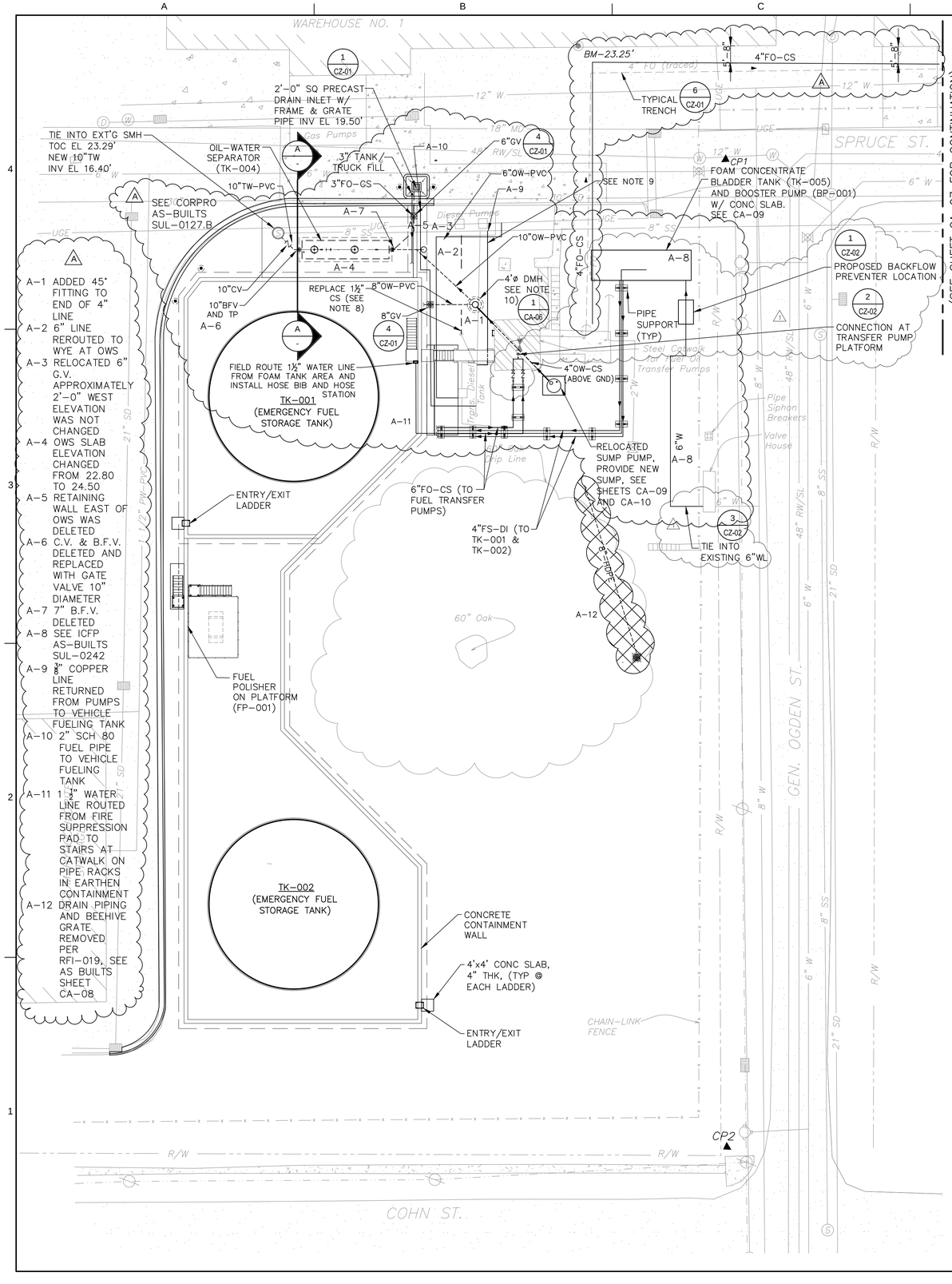

A-1 ADDED 45° FITTING TO END OF 4" LINE

A-2 6" LINE REROUTED TO WYE AT OWS

A-3 RELOCATED 6" G.V. APPROXIMATELY 2'-0" WEST ELEVATION WAS NOT CHANGED

A-4 OWS SLAB ELEVATION CHANGED FROM 22.80 TO 24.50

A-5 RETAINING WALL EAST OF OWS WAS DELETED

A-6 C.V. & B.F.V. DELETED AND REPLACED WITH GATE VALVE 10" DIAMETER

A-7 7" B.F.V. DELETED

A-8 SEE ICFP AS-BUILTS SUL-0242

A-9 ¾" COPPER LINE RETURNED FROM PUMPS TO VEHICLE FUELING TANK

A-10 2" SCH 80 FUEL PIPE TO VEHICLE FUELING TANK

A-11 1½" WATER LINE ROUTED FROM FIRE SUPPRESSION PAD TO STAIRS AT CATWALK ON PIPE RACKS IN EARTHEN CONTAINMENT

A-12 DRAIN PIPING AND BEEHIVE GRATE REMOVED PER RFI-019, SEE AS BUILTS SHEET CA-08

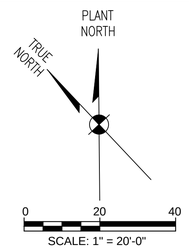

NOTES:

1. SEE SHEET CA-01 FOR EXISTING SITE LEGEND.
2. SEE SPECIFICATION SECTION 01 31 13 PROJECT COORDINATION FOR CONSTRUCTION SEQUENCING.
3. LOCATION OF EXISTING UTILITIES SHOWN ARE BASED ON EXISTING RECORDS. THE INFORMATION IS NOT TO BE RELIED ON AS BEING EXACT OR COMPLETE. CONTRACTOR SHALL FIELD VERIFY LOCATION OF ALL EXISTING UTILITIES PRIOR TO THE START OF CONSTRUCTION. ALL NEW UNDERGROUND PIPING SHALL BE FIELD ROUTED.
4. MINIMUM 2'-0" COVER REQUIRED OVER ALL NEW UNDERGROUND PIPING.
5. SIZE OF OWS IS APPROXIMATE. INVERT EL OF INLET IS FIXED AT EL 17.00' TO SUPPORT DRAINAGE. CONTRACTOR TO CONFIRM INLET AND OUTLET ELEVATIONS.
6. SEE SHEET SB-07 AND COORDINATE WITH OWS MANUFACTURER FOR INSTALLATION REQUIREMENTS AND RECOMMENDATIONS.
7. ALL OWS NOZZLES SHALL BE COVERED AND SEATED DURING EARTH WORK OPERATIONS.
8. REPLACE 1½" CS PIPE FROM VEHICLE FUELING TANK TO DIESEL FUEL PUMP CONTRACTOR TO FIELD VERIFY EXISTING LOCATION AND REROUTE AS REQUIRED TO AVOID NEW DRAIN LINES TO OWS.
9. REROUTE EXISTING VEHICLE FUELING TANK FILL LINE UNDER CATWALK. MODIFY OR REPLACE PIPE SUPPORTS IN-KIND. CONTRACTOR TO FIELD VERIFY TIE IN LOCATIONS.
10. SEE SPECIFICATIONS FOR S&WB STANDARD DRAINAGE MANHOLE AND COVER DETAILS.
11. PROVIDE IMPRESSED CURRENT CATHODIC PROTECTION SYSTEM FOR STEEL PIPE LINE AND OIL-WATER SEPARATOR IN ACCORDANCE WITH SECTION 26 42 00.
12. MATCH EXISTING GRADE FOR UTILITY TRENCH RESTORATION.
13. SEE SHEETS CA-09 AND CA-10 FOR PROPOSED SUMP.

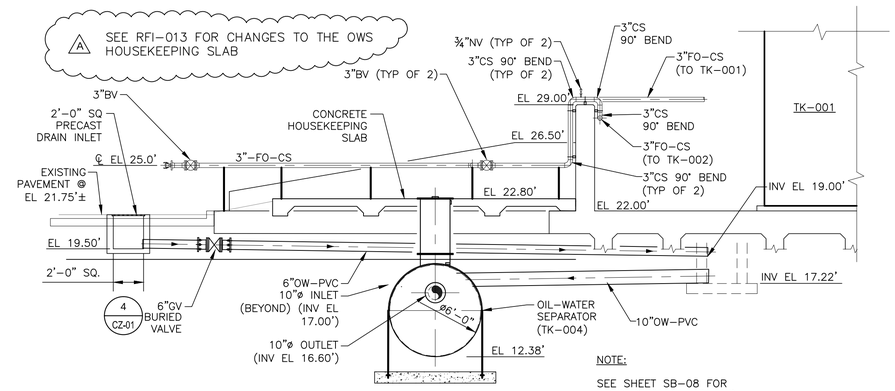

NOTE:

SEE SHEET SB-08 FOR HOLD DOWN, SLABS, AND EXCAVATION DETAILS

A CA-06/MB-02 **SECTION** SCALE:1"=5'-0"

10. 6-70' PILES DELETED RFI #013

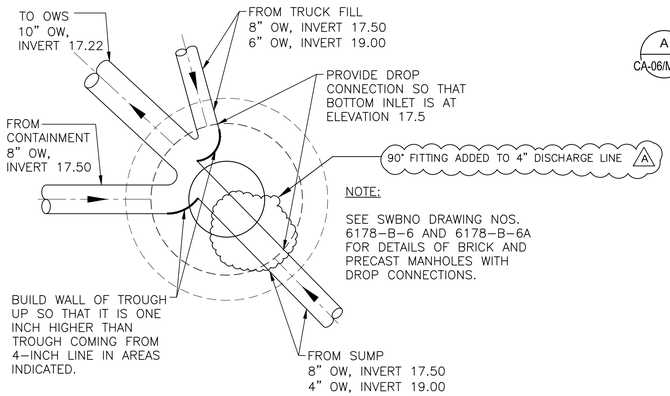

1 CA-06 **DETAIL** SCALE: NTS

A SEE FCO-014/RFQ-002 FOR CHANGES TO PIPING TO AND FROM OWS. SEE RFI-013 FOR CHANGES TO THE OWS HOUSEKEEPING SLAB. SEE E SHEETS FOR CONTRACTOR PROVIDED ELECTRICAL AS-BUILTS. NEW BELOW GRADE FUEL LINE ENCASED IN 4000 PSI FIBER RIENFORCED CONCRETE PER FCO-006.

REV.	DATE	DESCRIPTION	BY
A	10-25-19	AS-BUILT MARKUPS	LHN
1	3-23-15	REVISED PIPING, CALLOUTS & FIRE SUPPRESSION SLAB	LHN

SEWERAGE AND WATER BOARD OF NEW ORLEANS

CONTRACT No. 1369

HMGP EMERGENCY FUEL STORAGE RETROFIT POWER PLANT
MAIN WATER PURIFICATION PLANT POWER COMPLEX

FUEL STORAGE TANK AREA ENLARGED SITE PLAN

THIS DOCUMENT ORIGINALLY ISSUED AND SEALED BY LISBETH HABANS NAGRATH, LICENCE No. 36792 ON 2-6-15. THIS DOCUMENT SHOULD NOT BE CONSIDERED A CERTIFIED DOCUMENT.

Trigon
Quality ▲ Commitment ▲ Client Service
TRIGON DWG. NO. CA-06

TRIGON ASSOCIATES, LLC
1515 POYDRAS STREET
SUITE 2200
NEW ORLEANS, LA 70112
TEL: 504-585-5767
trigonassociates.com

DR. SJ CLARK
CK: RA CASSANOVA
AP: LH NAGRATH
LAST EDIT:
SCALE: AS NOTED
DATE: JANUARY 28, 2015

GENERAL SUPERINTENDENT

DWG. No. 12098-W8

SET NO: SHEET NO: 9 OF 72

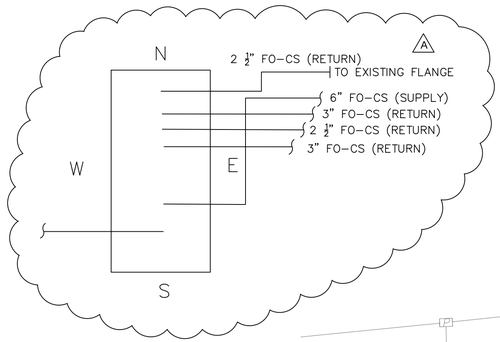

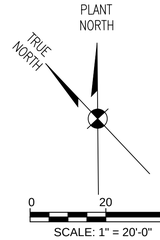

NOTES:

1. SEE SHEET CA-01 FOR EXISTING SITE LEGEND.
2. SEE SPECIFICATION SECTION 01 31 13 PROJECT COORDINATION FOR CONSTRUCTION SEQUENCING.
3. STEEL CASING PIPE TO BE INSTALLED BY JACK AND BORE FOR 6-INCH CARRIER PIPE (SUCTION FROM DAY TANK TO DIESEL PUMP ROOM) AND TWO (2) 3-INCH RETURN/BYPASS AND ONE (1) 2 ½"-INCH RETURN/BYPASS FROM DIESEL PUMP ROOM.
4. 2½" RETURN/BYPASS FROM GAS TURBINE NOT SHOWN. PIPE SHALL BE INSTALLED FROM EXISTING LOCATION IN EXCAVATED AREA TO NEW DAY TANK.
5. STEEL CASING PIPE TO BE INSTALLED BY JACK AND BORE FOR ELECTRICAL AND CONTROL CONDUITS. SEE ELECTRICAL SHEETS FOR DETAILS.
6. STEEL CASING PIPE SHALL HAVE MINIMUM WALL THICKNESS OF 0.500 INCHES. STEEL SPACERS SHALL BE USED FOR SUPPORT OF CARRIER PIPES, AT 10 FOOT INTERVALS, IN ACCORDANCE WITH MANUFACTURERS RECOMMENDATIONS SUCH THAT EACH SPACER SUPPORTS THE SAME UNIT WEIGHT OF THE CARRIER PIPES.
7. CASING PIPES REQUIRE CATHODIC PROTECTION. STEEL SPACERS WITH EPDM OR COMPOSITE CONTACT SURFACES SHOULD BE USED.
8. ENCLOSE ENDS OF CASING PIPE WITH 8-INCH BRICK MASONRY WITH WATER TIGHT GROUT.
9. PROVIDE IMPRESSED CURRENT & CATHODIC PROTECTION SYSTEM FOR STEEL PIPE LINES AND STEEL CASING PIPES IN ACCORDANCE WITH SECTION 26 42 00.
10. LOCATION OF EXISTING UTILITIES SHOWN ARE BASED ON EXISTING RECORDS. THE INFORMATION IS NOT TO BE RELIED ON AS BEING EXACT OR COMPLETE. CONTRACTOR SHALL FIELD VERIFY LOCATION OF ALL EXISTING UTILITIES PRIOR TO THE START OF CONSTRUCTION. ALL NEW UNDERGROUND PIPING SHALL BE FIELD ROUTED.
11. MATCH EXISTING GRADE FOR UTILITY TRENCH RESTORATION.
12. SLOPE NEW PAVEMENT TO NEAREST DRAIN INLETS.
13. UNDERGROUND TANKS FOR REMOVAL SHOWN FOR COORDINATION OF EXCAVATION.
14. SPOT ELEVATIONS SHOWN ARE EXISTING.

SEE SUL-00243 FOR HAND SKETCHED RECORD DRAWINGS

A

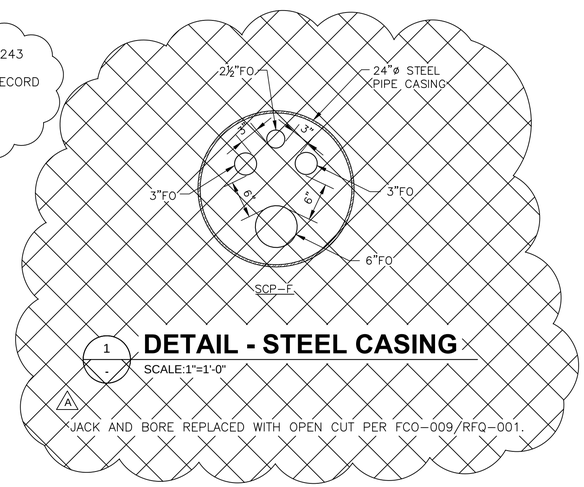

1 - **DETAIL - STEEL CASING**

SCALE:1"=1'-0"

A JACK AND BORE REPLACED WITH OPEN CUT PER FCO-009/RFQ-001.

A NEW BELOW-GRADE FUEL LINES ENCASED IN 4000 PSI FIBER REINFORCED CONCRETE PER FCO-006 AND FCO-009/RFQ-001.STEEL PLATES INSTALLED OVER FUEL LINES AND ELECTRICAL/CONTROLS DUCTBANK FOR EAGLE STREET CROSSING PER FCO-009/RFQ-001. SEE E SHEETS FOR CONTRACTOR PROVIDED ELECTRICAL AS-BUILTS.

REV.	DATE	DESCRIPTION	BY
A	10-25-19	AS-BUILT MARKUPS	LHN

SEWERAGE AND WATER BOARD OF NEW ORLEANS

CONTRACT No. 1369

HMGP EMERGENCY FUEL STORAGE
RETROFIT POWER PLANT
MAIN WATER PURIFICATION PLANT POWER COMPLEX

THIS DOCUMENT ORIGINALLY ISSUED AND SEALED BY LISBETH HABANS NAGRATH, LICENCE No. 36792 ON 2-6-15. THIS DOCUMENT SHOULD NOT BE CONSIDERED A CERTIFIED DOCUMENT.

DIESEL PUMP ROOM/DAY TANK AREA ENLARGED SITE, YARD PIPING & GRADING PLAN

Trigon
Quality ▲ Commitment ▲ Client Service

TRIGON DWG. NO. CA-07

TRIGON ASSOCIATES, LLC
1515 POYDRAS STREET
SUITE 2200
NEW ORLEANS, LA 70112
TEL: 504-585-5767

trigonassociates.com

DR:	SJ CLARK
CK:	RA CASSANOVA
AP:	LH NAGRATH
LAST EDIT:	
SCALE:	AS NOTED
DATE:	JANUARY 28, 2015

GENERAL SUPERINTENDENT

DWG. No. 12098-W8

SET NO: SHEET NO: 10 OF 72

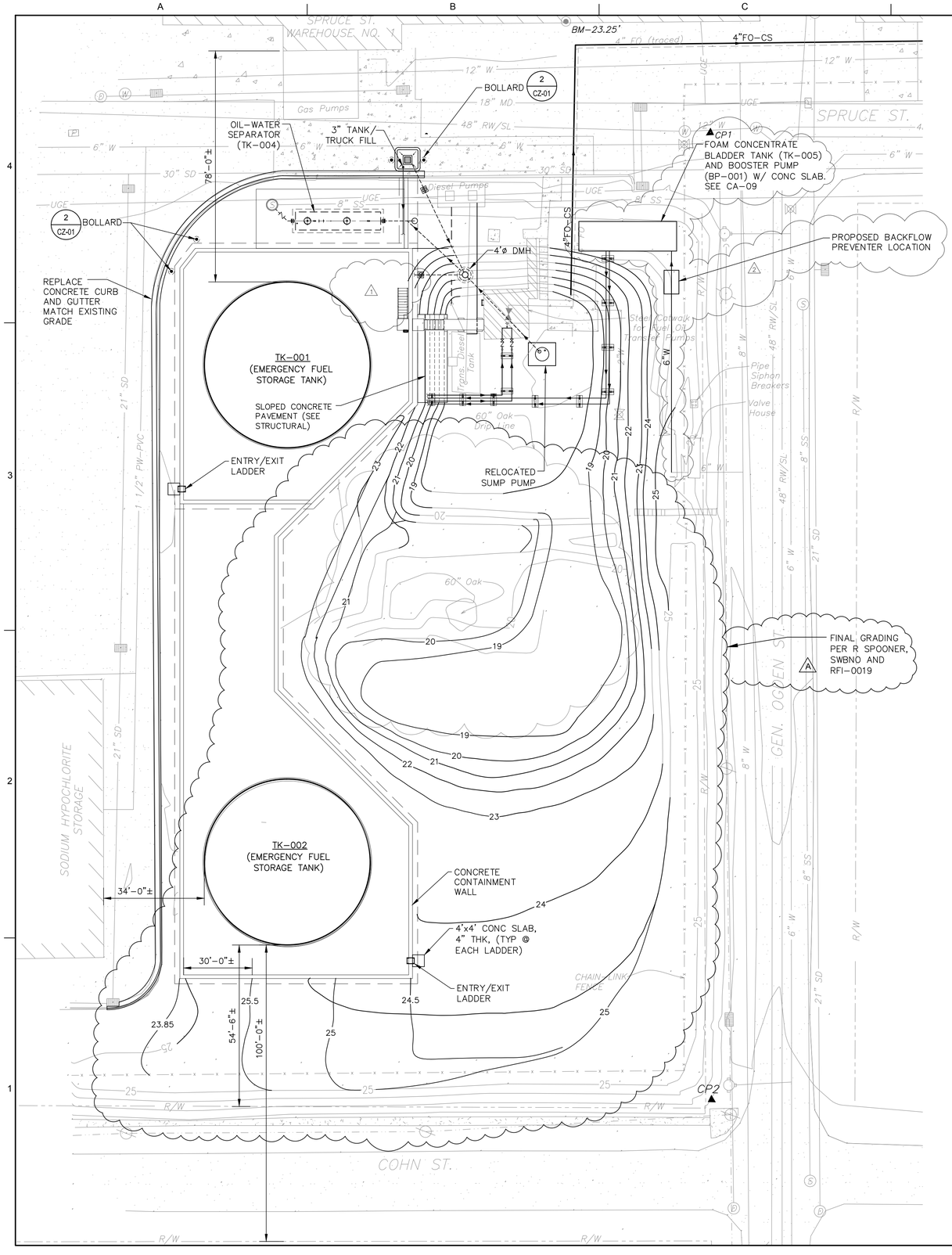

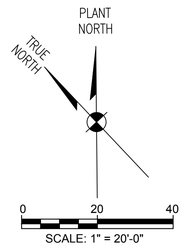

GRADING NOTES:

1. ALL UTILITIES TO REMAIN UNLESS OTHERWISE NOTED.
2. LOCATION OF EXISTING UTILITIES SHOWN ARE BASED ON EXISTING RECORDS. THE INFORMATION IS NOT TO BE RELIED ON AS BEING EXACT OR COMPLETE. CONTRACTOR SHALL FIELD VERIFY LOCATION OF ALL EXISTING UTILITIES PRIOR TO THE START OF CONSTRUCTION. ALL NEW UNDERGROUND PIPING SHALL BE FIELD ROUTED.
3. SPOT ELEVATIONS SHOWN ARE EXISTING.

REV.	DATE	DESCRIPTION	BY
A	10-25-19	AS-BUILT MARKUPS	LHN
2	3-23-15	REVISED FIRE SUPPRESSION SLAB & WL CONN. (ADD3)	LHN
1	3-16-15	DELETED GV CALLOUT (ADD1)	LHN

SEWERAGE AND WATER BOARD OF NEW ORLEANS

CONTRACT No. 1369

HMGP EMERGENCY FUEL STORAGE
RETROFIT POWER PLANT
MAIN WATER PURIFICATION PLANT POWER COMPLEX

FUEL STORAGE TANK AREA SITE GRADING PLAN

THIS DOCUMENT ORIGINALLY ISSUED AND SEALED BY LISBETH HABANS NAGRATH, LICENCE No. 36792 ON 2-6-15. THIS DOCUMENT SHOULD NOT BE CONSIDERED A CERTIFIED DOCUMENT.

Trigon
Quality ▲ Commitment ▲ Client Service

TRIGON DWG. NO. CA-08

TRIGON ASSOCIATES, LLC
1515 POYDRAS STREET
SUITE 2200
NEW ORLEANS, LA 70112
TEL: 504-585-5767

trigonassociates.com

DR:	SJ CLARK
CK:	RA CASSANOVA
AP:	LH NAGRATH
LAST EDIT:	
SCALE:	AS NOTED
DATE:	JANUARY 28, 2015

GENERAL SUPERINTENDENT

DWG. No. 12098-W8

SET NO: SHEET NO: 11 OF 72

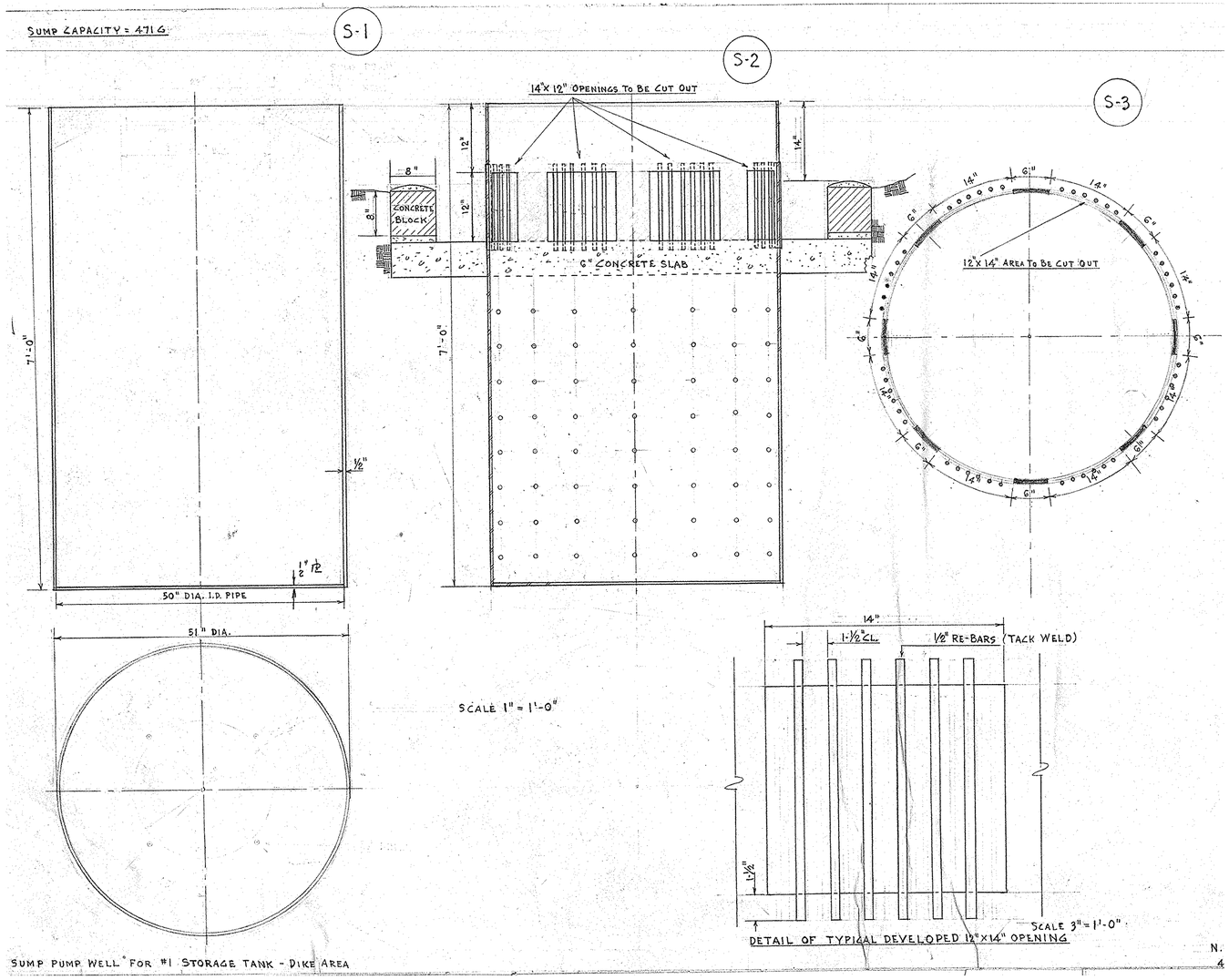

REFERENCE DRAWING - SUMP

SCALE:NTS (SEE NOTE 1)

SUMP NOTES:

1. THE BACKGROUND SHOWN IS REFERENCE DRAWING NO. 10961–W–2, SHEET 3A OF 3, DATED 11–13–64.
2. PROVIDE NEW SUMP IN KIND. FIELD VERIFY EXISTING SUMP PUMP COVER AND SUMP FOR MODIFICATIONS. PROVIDE COVER AND SUMP TO ACCOMMODATE EXISTING PUMP AND MOTOR. EXISTING PUMP, MOTOR, CHECK VALVE, AND PIPING FROM PUMP TO CHECK VALVE SHALL BE MOVED TO NEW SUMP LOCATION AS SHOWN ON CA–06 AND CA–08. DISCONNECT AND REMOVE EXISTING SUMP PUMP AND MOTOR. EXISTING LEVEL CONTROLLER TO BE USED FOR START/STOP OF EXISTING PUMP. SEE ELECTRICAL.

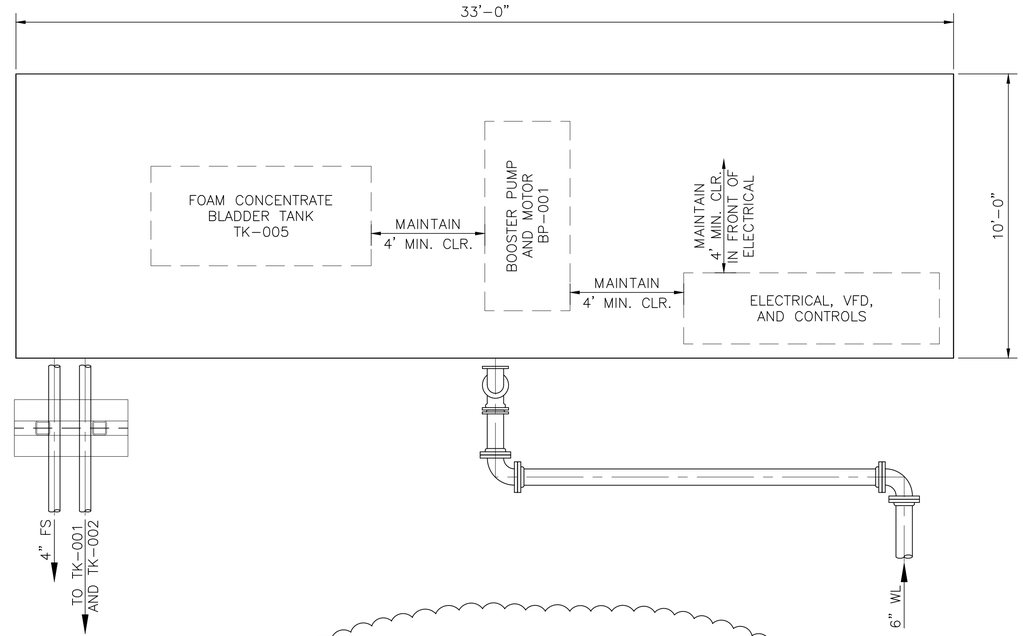

FIRE SUPPRESSION AREA

SCALE:3/8"=1'-0"

SEE SUL–0242 FOR ICFP AS–BUILTS

FIRE SUPPRESSION NOTES:

1. CERTIFIED FIRE PROTECTION SPECIALIST (CFPS) SHALL VERIFY SIZING OF SYSTEM TO PROVIDE ADEQUATE FIRE SUPPRESSION COVERAGE FOR TK–001 AND TK–002. SUBMIT FIRE SUPPRESSION PLAN.
2. CONTRACTOR SHALL PROVIDE A COMPLETE FUNCTIONING FIRE SUPPRESSION AND AUTOMATION/DETECTION SYSTEM. LAYOUT AND SIZE OF PROPOSED SLAB SHALL BE ADJUSTED PER CFPS RECOMMENDATIONS AND MANUFACTURER REQUIREMENTS, AT NO COST TO OWNER.
3. PIPING AND VALVE CONFIGURATION SHALL BE THE RESPONSIBILITY OF THE CFPS AND SHALL PROVIDE RELEASE OF AFFF SOLUTION TO BOTH OR EITHER TK–001 AND/OR TK–002.
4. COORDINATE WITH ELECTRICAL ENGINEER ON ELECTRICAL REQUIREMENTS, INCLUDING VFD DRIVE SIZE, SHOULD PUMP HP VARY FROM SIZE SHOWN ON DRAWING AND LISTED IN SPECIFICATIONS. FIRE SUPPRESSION SUPPLIER SHALL BE RESPONSIBLE TO SUPPLY THE EQUIPMENT REQUIRED, ALONG WITH ASSOCIATED ELECTRICAL EQUIPMENT AND INSTALLATION AT NO COST TO OWNER.

REV.	DATE	DESCRIPTION	BY
A	10–25–19	AS–BUILT MARKUPS	LHN

SEWERAGE AND WATER BOARD OF NEW ORLEANS

CONTRACT No. 1369

HMGP EMERGENCY FUEL STORAGE RETROFIT POWER PLANT
MAIN WATER PURIFICATION PLANT POWER COMPLEX

FIRE SUPPRESSION AND SUMP DETAILS

THIS DOCUMENT ORIGINALLY ISSUED AND SEALED BY LISBETH HABANS NAGRATH, LICENCE No. 36792 ON 2-6-15. THIS DOCUMENT SHOULD NOT BE CONSIDERED A CERTIFIED DOCUMENT.

Trigon
Quality ▲ Commitment ▲ Client Service
TRIGON DWG. NO. CA-09

TRIGON ASSOCIATES, LLC
1515 POYDRAS STREET
SUITE 2200
NEW ORLEANS, LA 70112
TEL: 504-585-5767
trigonassociates.com

DR.	SJ CLARK
CK.	GA KOLENOVSKY
AP.	LH NAGRATH
LAST EDIT:	
SCALE:	1"=20'-0"
DATE:	JANUARY 28, 2015

GENERAL SUPERINTENDENT

DWG. No. 12098-W8

SET NO: SHEET NO: 12 OF 72

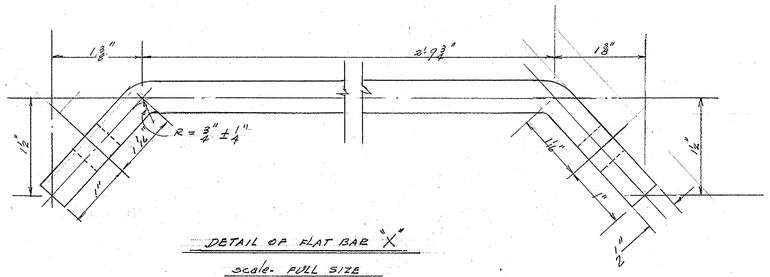

DETAIL OF FLAT BAR "X"

scale. FULL SIZE

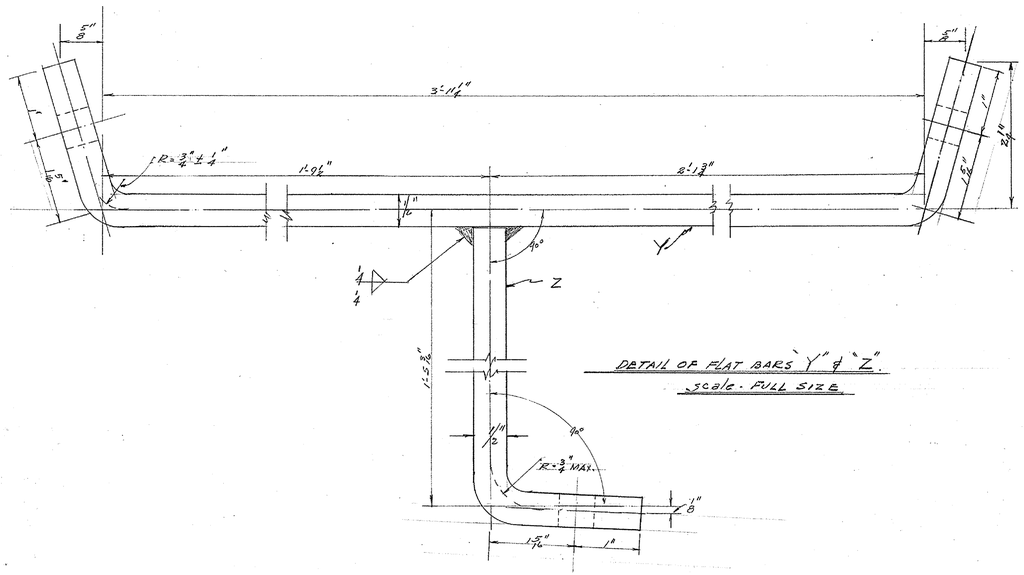

DETAIL OF FLAT BARS "Y" & "Z".

scale. FULL SIZE

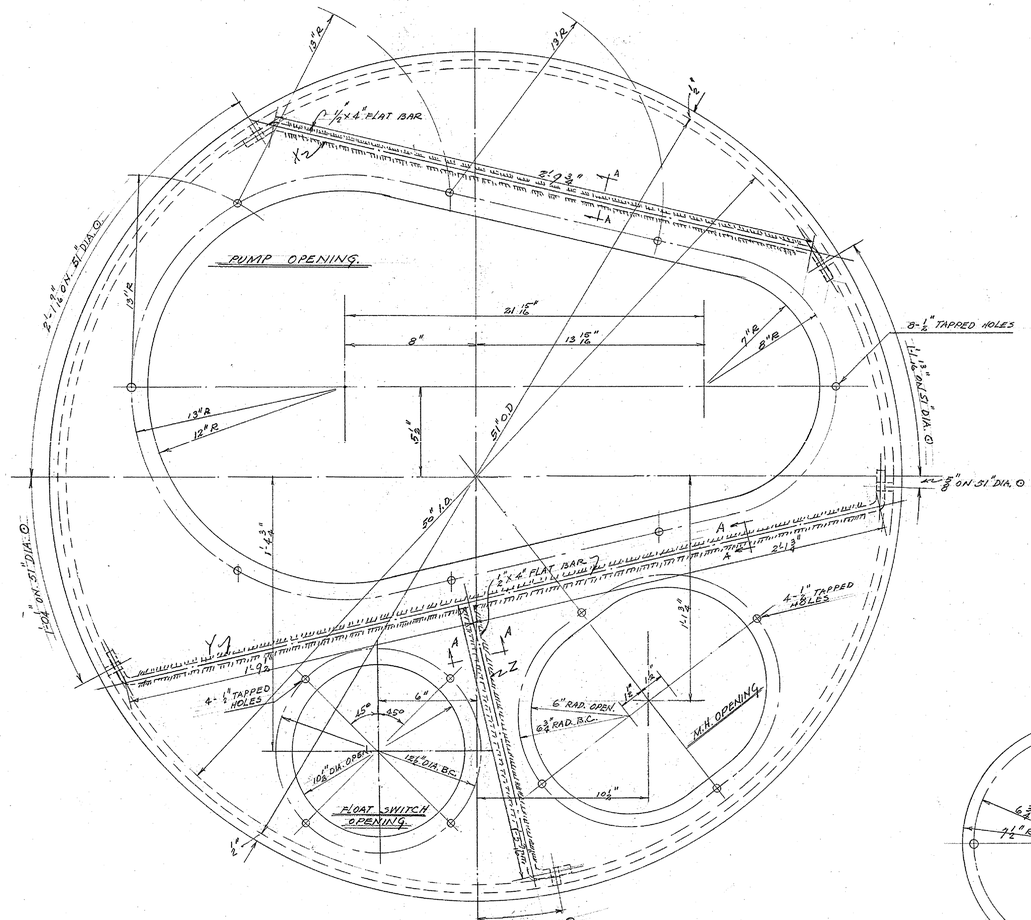

PUMP SUMP COVER PLATE

Scale. 3"=1'-0"

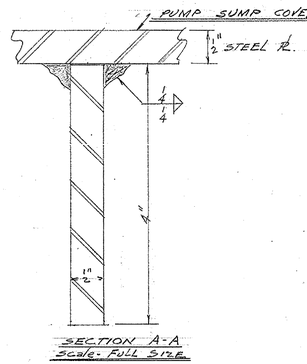

SECTION A-A

Scale. FULL SIZE

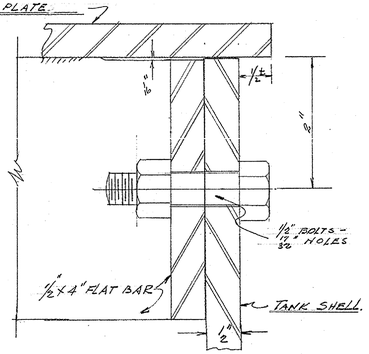

TYPICAL BOLTED CONNECTION

Scale: FULL SIZE

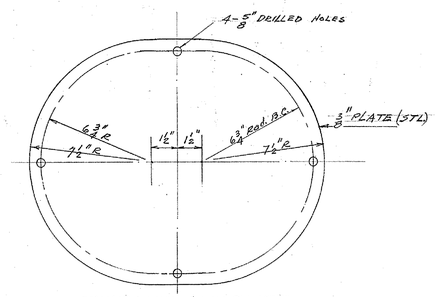

MANHOLE COVER PLATE

scale~ 3"=1'-0"

REFERENCE DRAWINGS - SUMP

SCALE:NTS (SEE NOTE 1)

NOTES:

1. THE BACKGROUND SHOWN IS REFERENCE DRAWING NO. 10961–W–2, SHEET 2A OF 3, DATED 6–64.
2. PROVIDE NEW SUMP PUMP COVER AND SUMP IN KIND. FIELD VERIFY EXISTING SUMP PUMP COVER AND SUMP FOR MODIFICATIONS. PROVIDE COVER AND SUMP TO ACCOMMODATE EXISTING PUMP AND MOTOR. EXISTING PUMP, MOTOR, CHECK VALVE, AND PIPING FROM PUMP TO CHECK VALVE SHALL BE MOVED TO NEW SUMP LOCATION AS SHOWN ON CA–06 AND CA–08.

REV.	DATE	DESCRIPTION	BY
A	10–25–19	AS–BUILT MARKUPS	LHN

SEWERAGE AND WATER BOARD OF NEW ORLEANS

CONTRACT No. 1369

HMGP EMERGENCY FUEL STORAGE
RETROFIT POWER PLANT
MAIN WATER PURIFICATION PLANT POWER COMPLEX

SUMP PUMP DETAILS

A AS–BUILT REVISIONS NOT PROVIDED FOR THIS SHEET BY THE CONTRACTOR.

THIS DOCUMENT ORIGINALLY ISSUED AND SEALED BY LISBETH HABANS NAGRATH, LICENCE No. 36792 ON 2-6-15. THIS DOCUMENT SHOULD NOT BE CONSIDERED A CERTIFIED DOCUMENT.

Trigon
Quality ▲ Commitment ▲ Client Service

TRIGON ASSOCIATES, LLC
1515 POYDRAS STREET
SUITE 2200
NEW ORLEANS, LA 70112
TEL: 504-585-5767

trigonassociates.com

TRIGON DWG. NO. CA-10

DR:	SJ CLARK
CK:	GA KOLENOVSKY
AP:	LH NAGRATH
LAST EDIT:	
SCALE:	1"=20'-0"
DATE:	JANUARY 28, 2015

GENERAL SUPERINTENDENT

DWG. No. 12098-W8

SET NO:

SHEET NO: 13 OF 72

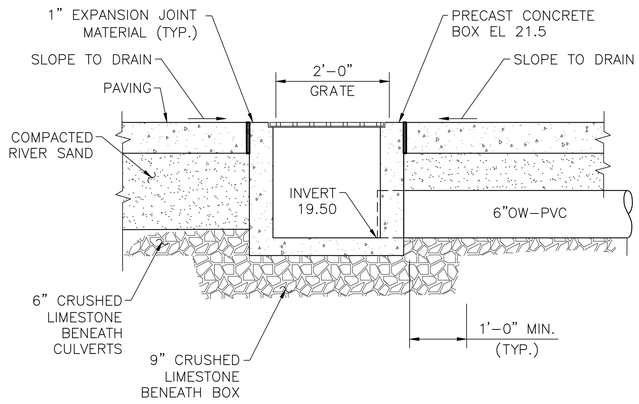

1 CA-06 DETAIL - PRECAST DRAIN INLET

SCALE: NTS

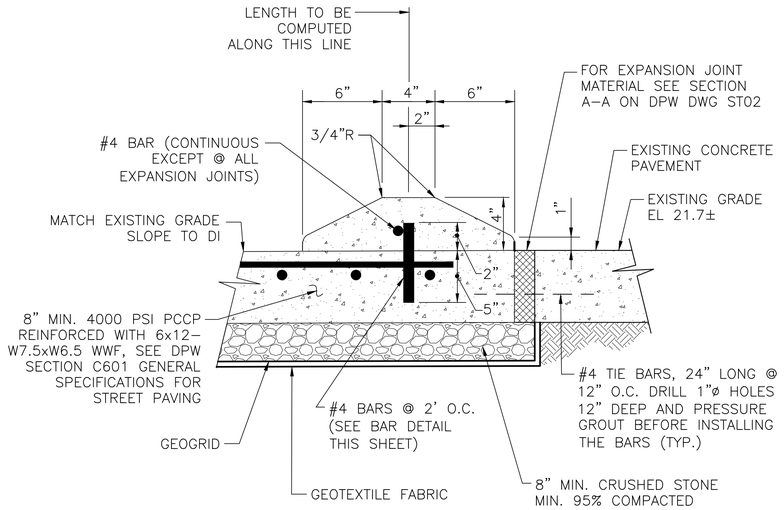

2 CA-08 DETAIL - CONCRETE MOUNTABLE CURB

SCALE: NTS

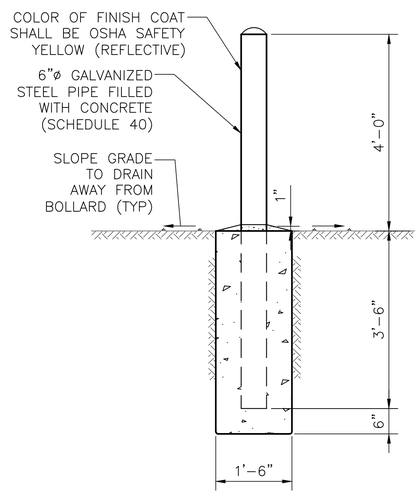

3 CA-08 DETAIL - BOLLARD

SCALE: NTS

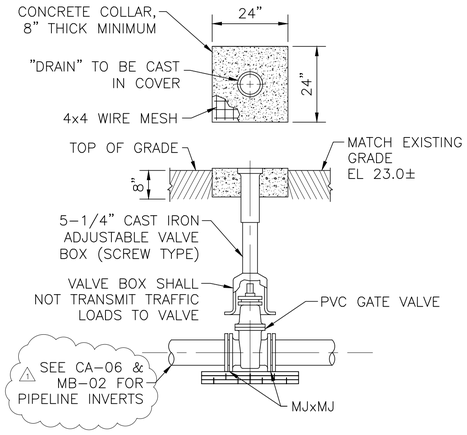

4 CA-06 DETAIL - TYPICAL BURIED VALVE INSTALLATION

SCALE: NTS

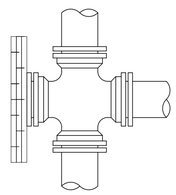

CROSS WITH PLUG

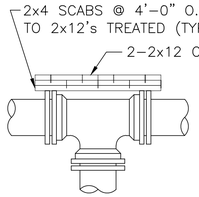

TEE

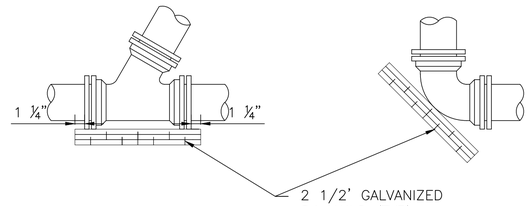

WYE

BEND

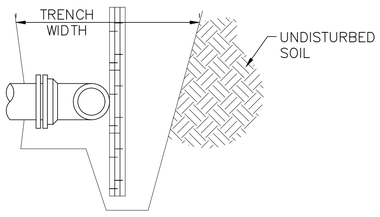

TYPICAL SECTION

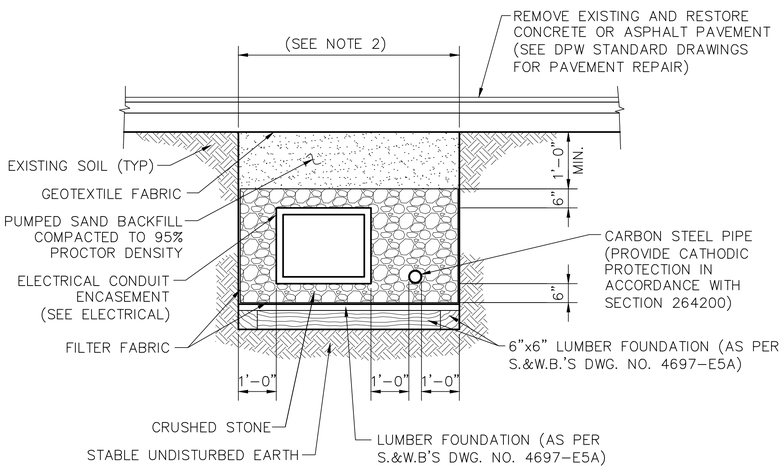

NOTES:

1. SHEETING AND BRACING FOR ALL EXCAVATIONS SHALL BE DESIGNED BY A REGISTERED LOUISIANA PROFESSIONAL ENGINEER.
2. DESIGN EXCAVATIONS FOR TYPE C SOIL, PER GEOTECHNICAL RECOMMENDATIONS, MARCH 7, 2014. MAXIMUM ALLOWABLE SLOPES FOR EXCAVATIONS LESS THAN 20 FT. DEEP ARE 1 ½:1 (H:V) PER 29 CFR PART 1926 SUBPART P.

6 CA-06/CA-07 DETAIL - TYPICAL PIPE TRENCH

SCALE: NTS

NOTES:

1. NUMBER OF REQ'D. BOARDS AS NEEDED DEPENDING UPON TRENCH WIDTH AND REQ'D BEARING AREA.
2. BOARDS SHALL BE PRESSURE TREATED.
3. NAILS SHALL BE GALVINIZED.

PIPE SIZE	MINIMUM REQUIRED SOIL BEARING AREA*
6"	10.6 SQ. FT.
8"	18.8 SQ. FT.

VALUES ARE FOR 90° BEND, BASED ON 500 P.S.F. SAFE BEARING LOAD AND PIPE PRESSURE OF 100 P.S.I. PLUS 33% SAFETY FACTOR FOR OTHER SOILS AND PRESSURES.

5 - DETAIL - TYPICAL THRUST RESTRAINT

SCALE: NTS

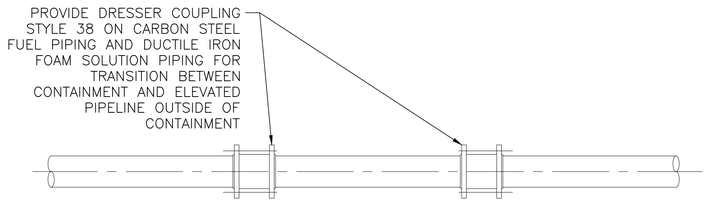

7 CA-06 DETAIL - TYPICAL PIPE DEFLECTION

SCALE: NTS

REV.	DATE	DESCRIPTION	BY
A	10–25–19	AS–BUILT MARKUPS	LHN
1	3–16–15	REVISED CALL-OUT DETAIL "4" (ADD.1)	LHN

AS–BUILT REVISIONS NOT PROVIDED FOR THIS SHEET BY THE CONTRACTOR.

THIS DOCUMENT ORIGINALLY ISSUED AND SEALED BY LISBETH HABANS NAGRATH, LICENCE No. 36792 ON 2-6-15. THIS DOCUMENT SHOULD NOT BE CONSIDERED A CERTIFIED DOCUMENT.

Trigon
Quality ▲ Commitment ▲ Client Service

TRIGON DWG. NO. CZ-01

TRIGON ASSOCIATES, LLC
1515 POYDRAS STREET
SUITE 2200
NEW ORLEANS, LA 70112
TEL: 504-585-5767
trigonassociates.com

SEWERAGE AND WATER BOARD OF NEW ORLEANS

CONTRACT No. 1369

HMGP EMERGENCY FUEL STORAGE RETROFIT POWER PLANT
MAIN WATER PURIFICATION PLANT POWER COMPLEX

CIVIL DETAILS

DR:	SJ CLARK
CK:	GA KOLENOVSKY
AP:	LH NAGRATH
LAST EDIT:	
SCALE:	AS NOTED
DATE:	JANUARY 28, 2015

GENERAL SUPERINTENDENT

DWG. No. 12098-W8

SET NO: SHEET NO: 14 OF 72

BACKFLOW PREVENTER NOTES:

1. REDUCED PRESSURE PRINCIPLE BACKFLOW PREVENTION ASSEMBLY SHALL COMPLY WITH ASSE 1013 & AWWA C511.
2. REDUCED PRESSURE DETECTOR BACKFLOW PREVENTION ASSEMBLY SHALL COMPLY WITH ASSE 1047.
3. DOUBLE CHECK VALVE BACKFLOW PREVENTION ASSEMBLY SHALL COMPLY WITH ASSE 1015 & AWWA C510.
4. DOUBLE CHECK DETECTOR BACKFLOW PREVENTION ASSEMBLY SHALL COMPLY WITH ASSE 1048.
5. BACKFLOW ASSEMBLY SHALL BE CENTERED ON CONCRETE PAD.
8. PIPE MATERIAL SHALL BE CLASS 350 DIP.
9. INSTALLATION SHALL BE IN COMPLIANCE WITH ALL APPLICABLE CITY ORDINANCES AND SPECIFICATIONS IN ADDITION TO THE ORLEANS PARISH PLUMBING CODE.
11. ALL 'NO LEAD' BRASS COMPONENTS SHALL MEET UNS C89833 AS PER ASTM B584.

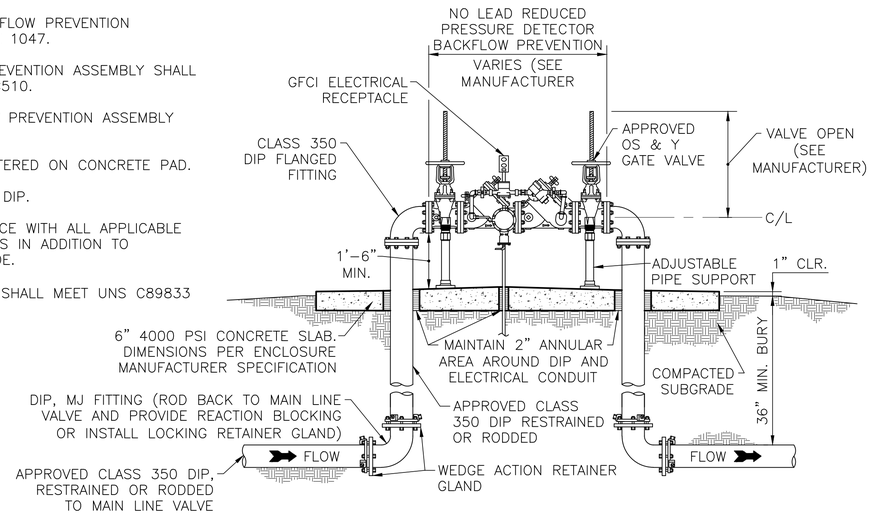

1 / CA-06 **TYPICAL BACKFLOW PREVENTER**

SCALE:NTS

A SEE SUL-0242 FOR ICFP AS-BUILTS AND ABOVE GRADE PIPE REROUTING

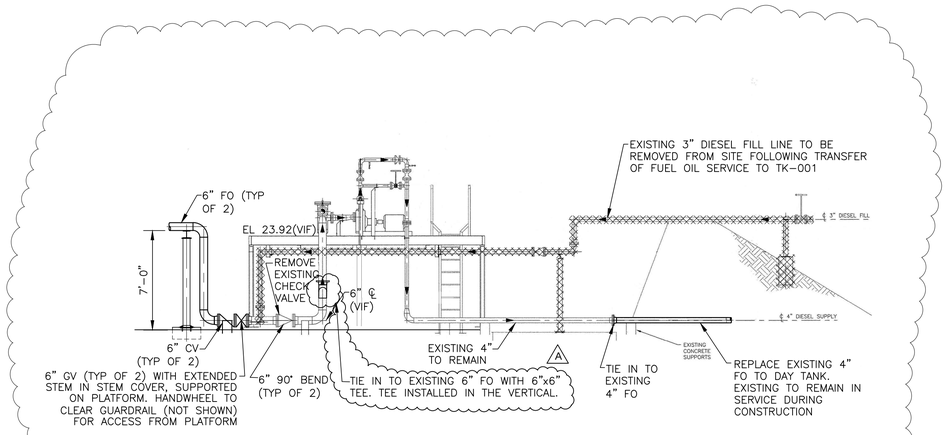

1 2 / CA-06 **CONNECTION AT TRANSFER PUMP PLATFORM**

SCALE:3/16"=1'-0"

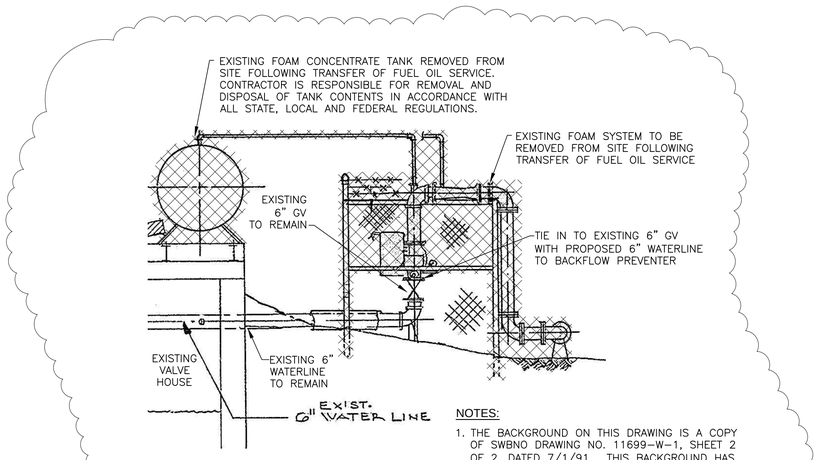

NOTES:

1. THE BACKGROUND ON THIS DRAWING IS A COPY OF SWBNO DRAWING NO. 11699-W-1, SHEET 2 OF 2, DATED 7/1/91. THIS BACKGROUND HAS BEEN INCLUDED FOR REFERENCE.

1 3 / CA-06 **WATERLINE CONNECTION AT VALVE HOUSE**

SCALE:3/16"=1'-0"

REV.	DATE	DESCRIPTION	BY
A	10-25-19	AS-BUILT MARKUPS	LHN
1	3-23-15	ADDED DETAILS "2 & 3" (ADD.3)	LHN

SEWERAGE AND WATER BOARD OF NEW ORLEANS

CONTRACT No. 1369

HMGP EMERGENCY FUEL STORAGE
RETROFIT POWER PLANT
MAIN WATER PURIFICATION PLANT POWER COMPLEX

CIVIL
DETAILS

THIS DOCUMENT ORIGINALLY ISSUED AND SEALED BY LISBETH HABANS NAGRATH, LICENCE No. 36792 ON 2-6-15. THIS DOCUMENT SHOULD NOT BE CONSIDERED A CERTIFIED DOCUMENT.

Trigon
Quality ▲ Commitment ▲ Client Service

TRIGON ASSOCIATES, LLC
1515 POYDRAS STREET
SUITE 2200
NEW ORLEANS, LA 70112
TEL: 504-585-5767

trigonassociates.com

TRIGON DWG. NO. CZ-02

DR: SJ CLARK
CK: GA KOLENOVSKY
AP: LH NAGRATH
LAST EDIT:
SCALE: 1"=20'-0"
DATE: JANUARY 28, 2015

GENERAL SUPERINTENDENT

DWG. No. 12098-W8

SET NO: SHEET NO: 15 OF 72

POST TENSIONED NOTES AND SPECIFICATIONS:

1. GENERAL REQUIREMENTS FOR POST TENSIONED SLAB ON GRADE: THESE NOTES AND SPECIFICATIONS ARE ADDITIONS TO THE SPECIFICATIONS INDICATED ON EACH DRAWING. CONTRACTORS MUST COMPLY WITH THE SPECIFICATIONS AS INDICATED.

   DESIGN DATA:

   SOIL BEARING CAPACITY: 800–1200 PSF

   LIVE LOAD ON THE FOUNDATION: 100 PSF

   DEAD LOAD: AS CALCULATED (VARIES) PSF

   STANDARDS:

   ASTM FOR STEEL

   ASTM A–615 (GRADE 60) REINFORCING STEEL

   ASTM 1557 SOIL COMPACTION

   ACI 318 FOR CONCRETE (LATEST EDITION)

   ACI A–416, TENDONS, DESIGNATED MILL NO. (SALVAGED CABLES NOT ALLOWED.)

   PTI "SPECIFICATIONS FOR UNBONDED TENDONS"

   PTI "DESIGN MANUAL" (LATEST EDITION)

   PTI "DESIGN AND CONSTRUCTION OF POST TENSIONED SLABS

2. SITE PREPARATION: GENERAL CONTRACTOR WILL BE RESPONSIBLE FOR LAYOUT AND VERIFICATION OF DIMENSIONS. TOLERANCES ARE 1/2" +/– AND SOIL PREPARATION. CONTRACTOR WILL BE RESPONSIBLE TO ESTABLISH THE SURVEY ELEVATION AS REQUIRED FOR FEMA WORK AS PER CODE, OR AS INDICATED ON DRAWINGS. CHECK FOR UNDERGROUND UTILITIES, PROTRUSIONS, OPENINGS, INSERTS, PIPES, CONDUITS, THIMBLES, COLUMNS, PINS, ANCHORS, BOLTS, DROPS, OFFSETS, LEDGES, BLOCK OUT, AND OTHER ITEMS SHOWN ON THE DRAWINGS, BEFORE CORRECTING.

3. TENDONS LAYOUT WILL BE AS SHOWN ON THE DRAWINGS. PLASTIC CHAIRS SHALL NOT DAMAGE THE MEMBRANE DURING CONCRETING.

4. SOIL BASE PREPARATION WILL BE IN INCREMENTS OF 6 INCHES COMPACTED TO 95% OF MAXIMUM DENSITY AT OPTIMUM MOISTURE CONTENT. TYPE OF FILL AS SPECIFIED. MIN 6" SAND FILL IS REQUIRED IF NOT SPECIFIED IN DWGS. THE SLAB ON GROUND INCLUDES A MINIMUM FILL, WHILE THE RAISED SLAB REQUIRES FILL THAT HAS A PRE–LOAD TIME AND SETTLEMENT WHERE SPECIFIED. CONSULT CITY REQUIREMENTS FOR FILL IN PLACE. CONTRACTOR MUST INFORM ENGINEER IF ANY CHANGE TO THE FILL IS MADE.

5. SOIL INFORMATION: CONTRACTOR WILL CONSULT THE SOIL BORING REPORT WHERE SUBMITTED, OBTAINED BY: PSI DATED: 7 MARCH 2014. THE SOIL BEARING CAPACITY INDICATED IS: 800–1200 PSF. THE SOIL PREPARATION WILL INCLUDE TOP SOIL REMOVAL AS SPECIFIED, UPON WHICH WILL BE PLACED SPECIFIED GRANULAR FILL TO BE COMPACTED TO 95% AT OPTIMUM MOISTURE (FOR SAND FILL).

6. THE OWNER'S SUPERVISOR WILL REQUIRE TESTING NECESSARY TO CONFIRM THE SPECIFIED LOADINGS. THE SOIL PREPARATION LOADS SHOULD BE MINIMUM OR BETTER THAN SPECIFIED. CONTRACTOR TO SUBMIT RECORDS TO ENGINEER.

7. CONTRACTOR WILL FOLLOW THESE SPECIFICATIONS AND OTHER WHERE SUBMITTED. CONTRACTOR MUST RECORD ALL PROCEDURES, TENSIONS, AND DEVIATIONS, WHICH WILL BE SUBMITTED TO THE ENGINEER DURING THE TENSIONING WORK. QUALITY CONTROL WILL BE THE RESPONSIBILITY OF THE CONTRACTOR REGARDLESS OF ANY OWNER REPRESENTATIVE PRESENCE.

8. MATERIALS CONCRETE MIX: CONTRACTOR TO SUBMIT DESIGN MIX AS SPECIFIED ON DRAWINGS. INDICATE MIX BELOW (SAMPLE): (CALCIUM CHLORIDE ADMIXTURES AND FLY ASH NOT ALLOWED) (CONCRETE SEALING MUST BE DONE WITH CONCRETE COMPOUND)

   SACKS PER CUBIC YARD: 5.9 SACKS/CY

   WATER PER CUBIC YARD: 30 GALLONS/CY

   CONCRETE STRENGTH AFTER 28 DAYS: 3,500 PSI

   CONCRETE STRENGTH BEFORE STRESSING: 1,500 PSI

   MINIMUM CURING TIME 5 DAYS, UNDER FAVORABLE WEATHER

   6 MILS PE MEMBRANE WILL BE USED AS SPECIFIED

9. THERMAL CRACKING REDUCTION WILL BE MITIGATED WITH THE INSTALLATION OF THE 6X6 W2.9XW2.9 MESH, INSTALLED 1" BELLOW THE FINISH TOP OF THE SLAB IN THE SLAB AREA. WELDED WIRE FABRIC WILL CONFORM WITH ASTM A185, PROVIDING FOR 9" AT THE END LAPS AND 3" FOR THE SIDE LAPS.

10. POST TENSION WORK WILL COMPLY WITH PTI SPECS (LATEST EDITION). TENDONS: 7 STRESS RELIEVED STRANDS, COATED, CASES IN PE PLASTIC (ALLOW 8" X 36" CLEARANCE FOR STRESSING EQUIPMENT). ULTIMATE STRESS: 270 KSI, FOR TYPICAL TENDON'S STRESSING:

1/2 INITIAL STRESSING	33.0K
ANCHORED STRESS	28.9K
7/16 INITIAL STRESSING	24.8K
ANCHORED STRESS	21.7K
3/8 INITIAL STRESSING	21.7K
ANCHORED STRESS	16.1K
SHORT TENDONS OVER	20%

    STRESS

    (STRESSING MODIFICATIONS PERMITTED ONLY IF APPROVED BY ENGINEER.) NO ACTIVE LOADING IS PERMITTED PRIOR TO STRESSING.

11. REQUIREMENTS PRIOR TO STRESSING: REMOVE FORMS 6 DAYS AFTER CONCRETING, CHECK MIN. CONCRETE STRENGTH, CONCRETE MAY SHOW MINOR CRACKS THOSE WILL BE CLOSED POST STRESSING.

12. POST TENSION STRESSING SAMPLE CALCULATIONS (NOTES ON ELONGATION):

    CONTRACTOR WILL INFORM THE ENGINEER OF THE TENSIONING FORCES RELATIVE TO OBTAINED ELONGATIONS. WHERE ELONGATION IS NOT ACHIEVED AS PER ADJUSTMENT, CONTRACTOR WILL CHECK THE PHYSICAL PROPERTIES OF THE CABLES AND WILL COMPARE TO THE MODULUS AND ELONGATION CALCULATED. PT CONTRACTOR MUST CALCULATE THE ELONGATION AS FOLLOWS: LENGTH OF THE CABLE IN FEET TIMES 9.37%F. FOR EXAMPLE: 100FT X 9.37%/100 = 9.37 ELONGATION.

13. SUBMITTALS: DESIGN CALCULATIONS BASED ON ARCHITECTURAL BUILDING DESIGN, PSF LL, PSF DL, WIND LOADS AS PER CODES. ALL COMPUTATIONS MUST INDICATE ELONGATION EXPECTED FROM THE POST TENSIONING.

14. SHOP DRAWINGS, DETAILS, COMPONENTS OF THE CONSTRUCTION METHODOLOGY OF STRESSING,PROFILES OF TENDONS, AND OTHER QUALITY CONTROL PROCEDURES MUST BE SUBMITTED TO THE ENGINEER FOR APPROVAL.

    TESTS AND CERTIFICATIONS: CERTIFIED MILL REPORTS FOR PRE STRESSING CABLES MUST BE SUBMITTED TO THE ENGINEER. OTHER DATA INCLUDED MUST CERTIFY: THE CABLE'S ULTIMATE STRENGTH, MODULUS OF ELASTICITY, AND PERCENT ELONGATION AT RUPTURE IN COMPLIANCE WITH THE DESIGN CALCULATIONS. ALL TENDONS MUST BE MARKED WITH THE MILL CERTIFICATION NUMBER.

15. MATERIALS: POSTTENSIONING STEEL WILL BE SEVEN–WIRE LOW RELAXATION STRAND IN ACCORDANCE WITH ASTM A416, GRADE 270 (LATEST EDITION) ULTIMATE TENSILE STRENGTH WILL NOT BE LESS THAN 270 KSI.

    ANCHORS: THE APPROVED ANCHORS MUST MEET SPECIFICATIONS.

    ALL ANCHORS AND THEIR USE MUST MEET THE "SPECIFICATIONS FOR UNBONDED TENDONS", AS PREPARED BY THE POST TENSION INSTITUTE.

    COATING MUST BE RUST PREVENTATIVE AND LUBRICANT APPLICATION AS PER LATEST PTI REQUIREMENTS. SHEATHING MUST BE PE PLASTIC, MINIMUM 0.025 INCHES THICK AND CAPABLE OF SUSTAINING 180 DEG F TEMPERATURE. THERE SHALL BE NO VISIBLE DAMAGE DONE TO THE PLASTIC SHEATHING SUCH AS CRACKS, BLISTERS AND OTHER IMPERFECTIONS.

16. EQUIPMENT: HYDRAULIC JACKS MUST HAVE ACCURATE READING, INDEPENDENTLY TESTED AND CALIBRATED HYDRAULIC PRESSURE GAUGES. THE SHEATHING CAN BE CUT TO A MINIMUM LENGTH NECESSARY FOR THE GRIP ON THE CABLE NOT TO BE EXCEED 6 INCHES.

17. CONTRACTORS QUALIFICATIONS: CONTRACTOR MUST PROVE A MINIMUM OF 3 YEARS OF EXPERIENCE IN FIELD OF POSTTENSIONING. QUALIFIED SUPERINTENDENT MUST SUPERVISE THE WORK AND ASSURE FOR QUALITY WORKMANSHIP. SUPERINTENDENT MUST SCHEDULE THE TENSIONING PROCEDURES TO COMPLY WITH THE REQUIREMENTS FOR TENSIONING 5 DAYS AFTER THE CONCRETE WORK WAS PLACED AFTER A MINIMUM SPECIFIED STRENGTH WAS OBTAINED FROM THE SAMPLES TESTED. INTERMEDIATE JOINT POSTTENSIONING WILL BE TENSIONED UNDER THE SAME CONDITION. ANY CHANGES FOR POSTTENSIONING SCHEDULE MUST BE APPROVED BY THE ENGINEER. 1) ELONGATION MEASUREMENTS, 2) STRESSES MEASURED DURING ELONGATION AND 3) GAUGE PRESSURES.

CONCRETE AND REINFORCING STEEL NOTES:

1. STANDARDS:

   ACI: 301, 315, 318

   REBAR: ASTM A615–GRADE 60

   WELDED REINFORCEMENT STEEL: ASTM A706, GRADE 60

   WIRE FABRIC WELDED: ASTM A185

   STEEL FIBER: ASTM A820, TYPE I

CLASS	F'C (PSI)	REQUIREMENTS
CONCRETE FOOTINGS, PIERS, INTERIOR CONCRETE (NOT POST TENSION)	3,000	
EXTERIOR CONCRETE (NOT POST TENSION)	4,000	
MASONRY GROUT	3,000	
EARTH FILL	2,000	COMPACT TO 95% AT OPTIMUM MOISTURE

2. MIN. MESH REINFORCING WHERE NO OTHER IS SPECIFIED WILL BE 6X6X–W1.4X1.4 WWF INSTALLED SIMILAR TO REBAR.

3. MIN. WALL REINFORCEMENT:

WALL THICKNESS	HORIZONTAL	VERTICAL
8–INCH	#4 AT 12" ON CENTER	#4 AT 18" ON CENTER
10–INCH	#4 AT 10" ON CENTER	#4 AT 16" ON CENTER
12–INCH	#4 AT 16" ON CENTER	#4 AT 18" ON CENTER

4. 2–#5 REBAR AT ALL OPENINGS MIN. EXTENDED 2' BEYOND ENDS OF OPENING.

5. STAGGER SPLICES 40 DIAMETERS WHERE ALLOWED.

6. WHERE CONTRACTOR JOINTS SPECIFIED AT MAX. 45' KEYED EXPANSION JOINTS USE 1'' COMPRESSIBLE FILLER AND WATERSTOP.

7. CLASS B TENSION LAP SPLICES FOR HORIZONTAL AND VERTICAL REINFORCING ARE ALLOWED. NO SPLICES IN BEAMS, JOISTS OR SLAB STEEL IS PERMITTED, COMPRESSION SPLICES LAP 30 DIAMETERS, TENSION SPLICES PER ACI CODES, WIRE FABRIC LAP 1 SPACE +2" AT ALL EDGES.

8. OPENINGS: IF NOT SPECIFIED AND NEEDED CONTRACTOR MUST OBTAIN APPROVAL FROM THE ENGINEER PRIOR TO CUTTING.

9. LAYOUT AND SHOP DRAWINGS WILL BE THE TOTAL RESPONSIBILITY OF THE CONTRACTOR. DISCREPANCIES WILL BE REPORTED TO THE ENGINEER.

10. STEEL OVERLAP WHERE SPECIFIED, THE LENGTH WILL BE IN ACCORDANCE WITH ACI 318–05, OR AS SHOWN ON THE PLANS.

11. WHERE NOT SHOWN ON THE DRAWINGS THE REINFORCING DETAILS WILL CONFORM WITH TYPICAL "DETAILS AND DETAILING CONCRETE REINFORCEMENT", ACI SP–66.

12. RE–BARS POSITIONING WILL BE PROPERLY ALIGNED AS PER SPECIFIED REQUIREMENTS, WHICH WILL INCLUDE ALL PROPER SUPPORTS TYPICAL FOR CONCRETE WORK. ENGINEER WILL INSPECT PLACEMENT, ORIENTATION, AND POSITION OF REINFORCING PRIOR TO CONCRETE PLACEMENT. CONTRACTOR TO ARRANGE FOR INSPECTION.

13. THE REINFORCING WILL BE ADJUSTED FOR BY PASS OF OBJECTS SUCH AS, PIPES, OPENINGS, AND OTHER OBSTRUCTIONS. SUCH DETAILS WILL BE APPROVED BY THE ENGINEER.

14. REINFORCING WILL BE CONTINUOUS WITH FULL TENSION LAP SPLICES. AT BEAMS AND SLAB ENDS, THE REBAR HOOK AND DETAILING WILL BE IN ACCORDANCE WITH ACI PRACTICES FOR 90 DEGREE BENDING. CORNERS WILL BE INSTALLED WITH "L" BARS AS PER ACI RECOMMENDATIONS. THE ENGINEER WILL APPROVE AND INSPECT THE DETAILS OF SUCH INSTALLATION. CONTRACTOR WILL SUBMIT SHOP DRAWINGS FOR REINFORCING WORK FOR APPROVAL TO THE ENGINEER PRIOR TO FABRICATION.

15. CONSTRUCTION JOINTS WILL BE INSTALLED AS PER DRAWINGS. ANY ADDITIONAL CONSTRUCTION JOINTS WILL BE APPROVED BY THE ENGINEER IF FOUND NECESSARY.

16. PROTRUSIONS THROUGH THE CONCRETE WORK WILL BE WITH SLEEVES OR AS PER DRAWINGS. CONTRACTOR WILL COORDINATE PLACEMENT AND INSTALLATION OF THOSE WITH OTHER TRADES.

17. TYPICAL CHAMFERS, WHERE NOT OTHERWISE SPECIFIED ON THE DRAWINGS, WILL BE 3/4".

18. THE STRENGTH OF THE CONCRETE WILL BE AS SPECIFIED ON THE DRAWINGS, AND WILL GENERALLY BE IN ACCORDANCE WITH THE FOLLOWING: CONCRETE MINIMUM 28 DAY COMPRESSIVE STRENGTH. CAST IN PLACE PILE CAPS, BASE, SLABS, WALLS, PLATFORMS, COLUMNS, PILASTERS, BEAMS AND DECKS, 4,000 PSI CONCRETE STRENGTH. PRECAST CONCRETE, 4,000 PSI FOR BEAMS AND PANELS, AND 3,000 PSI CONCRETE STRENGTH FOR DUCT–BANKS, SIDEWALKS AND BOLLARDS.

19. CONCRETE DESIGN IN ACCORDANCE WITH ACI 301 AND 318, DELIVERED AT THE SITE IN ACCORDANCE WITH "SPECIFICATIONS FOR READY–MIX CONCRETE" ASTM C94.

20. CONCRETE PLACEMENT AND CONSOLIDATION IN ACCORDANCE WITH ACI 304 AND 309, CURED ACI 308, FINISHED ACI 301.

21. WELDED WIRE FABRIC, WHERE INDICATED ON THE DRAWINGS, WILL CONFORM TO ASTM A185 PROVIDING 9" FOR END LAPS AND 6" FOR SIDE LAPS.

22. EPOXY GROUT WILL BE USED AS A NON–SHRINK AND NON–METALLIC GROUT IN ACCORDANCE WITH REQUIREMENTS FOR INSTALLATION EMBEDDED ANCHOR BLOTS, NUTS AND WASHERS, ASTM F1554 OR ASTM A307 FOR HOT DIP GALVANIZED STEEL.

23. CONCRETE COVER WILL BE IN ACCORDANCE WITH ACI 318–05 UNLESS OTHERWISE SPECIFIED ON THE DRAWINGS AND SPECIFICATIONS. THESE CRITERIA WILL BE APPLICABLE TO SLABS, WALLS, BEAMS, AND COLUMNS. WHERE PERMANENT HYDROSTATIC LOADING IS IMPOSED, THE COVER WILL BE 3" IN ACCORDANCE WITH EM 1110–2–2104.

STRUCTURAL STEEL NOTES:

1. THE STABILITY OF THE STRUCTURE IS ASSURED IN ITS COMPLETED STAGE. TEMPORARY SUPPORTS, TEMPORARY GUY WIRES, BRACES, FALSEWORK, CRIBBING OR OTHER ELEMENTS ARE REQUIRED DURING ERECTION UNDER ALL LOADING CONDITIONS. THE CONTRACTOR IS OBLIGATED TO PROVIDE ALL THESE FEATURES.

2. CONTRACTOR MUST COORDINATE ARCHITECTURAL, MECHANICAL, ELECTRICAL, PLUMBING AND CIVIL DRAWINGS FOR INSERTS, SLEEVES, CURBS, PADS, AND ANY OTHER FEATURES AFFECTING STRUCTURAL WORK NOW SHOWN.

3. ALL FABRICATIONS MUST BE APPROVED AS "SHOP DRAWINGS" PRIOR TO FABRICATION AND MUST COMPLY WITH "CODE OF STANDARD PRACTICE FOR STEEL BUILDINGS AND BRIDGES," AS PUBLISHED BY AMERICAN INSTITUTE OF STEEL CONSTRUCTION (AISC), LATEST EDITION.

4. SHOP DRAWINGS WILL BE PREPARED ACCORDING TO THE LATEST "STRUCTURAL STEEL DETAILING MANUAL" OF THE AISC AND SUBMITTED FOR REVIEW PRIOR TO FABRICATION.

5. STRUCTURAL STEEL GENERALLY, IF NOT NOTED OTHERWISE WILL COMPLY WITH ASTM A36 STANDARD FOR STRUCTURAL STEEL, PLATE, BARS, AND CHANNELS, ASTM A993 FOR WIDE FLANGE SHAPES, ASTM A53 GRADE B, FOR STRUCTURAL PIPES, ASTM A500 GRADE B OR A501 FOR STRUCTURAL TUBING BOLTS: ASTM A325. WELDING ELECTRODES: AWSA 5.1 OR 5.5 SERIES E70 ALL WELDING WILL BE ELECTRIC, TECHNIQUE AND WORKMANSHIP TO CONFORM TO THE AMERICAN WELDING SOCIETY AWS D1.1 USE E70XX ELECTRODES. WELDERS MUST BE CERTIFIED. THE WELDING SYMBOLS ARE TO INDICATE THE SIZE AND TYPE OF THE WELDS. THE SHOP DRAWINGS WILL SHOW A COMPLETE DETAIL FOR WELDING WHICH WILL BE SUBMITTED FOR APPROVAL PRIOR TO CONSTRUCTION BY CONTRACTOR.

6. STRUCTURAL STEEL IN CONFORMANCE WITH "SPECIFICATIONS FOR STRUCTURAL STEEL BUILDINGS– ALLOWABLE STRESS DESIGN AND PLASTIC DESIGN" OF AISC, LATEST EDITION. BEAMS WITHOUT SPECIFIED CAMBER MUST BE FABRICATED SO THAT AFTER ERECTION ANY CAMBER DUE TO ROLLING OR SHOP FABRICATION IS UPWARD AT MID SPAN.

7. PAINTING AND PROTECTION OF THE STEEL STRUCTURES WILL CONFORM TO THE SPECIFICATIONS AS NOTED IN THE STEEL SECTION. PAINT AND PROTECTION: PRIME COAT (TOUCH UP AFTER ERECTION), SPRAY ON FIREPROOFING ON STEEL. WHERE REQUIRED ITEMS FOR HOT–DIPPED GALVANIZATION WILL INCLUDE THE FOLLOWING: A. ITEMS INCLUDED ON THE DRAWING, AND MISCELLANEOUS INCIDENTAL ITEMS NECESSARY FOR UNIFORMITY OF STEEL CONNECTIONS TO PREVENT CORROSION, ALL IN CONFORMANCE WITH THE SPECIFICATIONS.

8. STEEL WELDED CONNECTIONS MUST BE WELDED, BOLTED OR BOTH. MEMBERS CONNECTED IN THE SHOP THAT ARE WELDED AND BOLTED, IF NOT NOTED OTHERWISE, WILL BE BOLTED WITH 3/4"ØA–325 HIGH STRENGTH BOLTS. ALL SUCH CONNECTIONS WILL BE AS PER DESIGN HALF OF THE ALLOWABLE UNIFORM LOAD, UNLESS OTHERWISE NOTED. MINIMUM OF TWO 3/4"Ø BOLTS WILL BE APPLIED PER CONNECTION. BOLTED CONNECTIONS WILL BE ASSEMBLED AND TESTED ACCORDING TO SPECIFICATION FOR STRUCTURAL JOINTS USING ASTM A325 OR ASTM A490 BOLTS.

9. ALL STEEL JOISTS MUST BE FABRICATED TO RESIST A NET WIND UPLIFT FORCE AS PER 170 MPH UPLIFT CALCULATION REQUIREMENTS APPLIED OVER THE ENGAGED AREA. ALL BOLTED CONNECTIONS WILL BE SHEAR BEARING TYPE. DESIGN CONNECTIONS TO A FULL MEMBER CAPACITY, AND SHOW IT ON THE SHOP DRAWINGS.

10. TESTING: INDEPENDENT TESTING LABORATORY, WHERE SPECIFIED, WILL BE DONE ON ALL CRITICAL WELDS AND 25% ON NON–CRITICAL. FULL PENETRATION WELDS ARE CONSIDERED CRITICAL WELDS AND THOSE SPECIFIED AS MOMENT CONNECTION WELDS. MILL REPORTS WILL BE PROVIDED TO IDENTIFY THE MATERIAL. A235 & A490 BOLTS – PROVIDE FOR BOLT INSPECTIONS.

11. STEEL ANCHORS AND DRILLED CONNECTIONS:

    DRILLED ANCHORS TO CONCRETE WILL BE WEDGE TYPE WITH ONE PIECE WRAP AROUND.

    ANCHORS WILL BE GALVANIZED AS FOLLOWS:

ANCHOR SIZE	MIN EMBEDMENT	PULLOUT (LBS)	SHEAR (LBS)
1/4"Ø	2"	550	590
3/8"Ø	2–1/2"	1050	1300
1/2"Ø	3–1/2"	1700	2200
5/8"Ø	4"	2400	3300
3/4"Ø	4–3/4"	3250	4650
1"Ø	6"	6400	7470

    LOADS INDICATED ARE SERVICE LOADS IN LBS FOR STAINLESS STEEL ANCHORS AT 3,000 PSI CONCRETE.

12. MISCELLANEOUS STEEL WORK ITEMS: OPENING CUT WILL EXCEED 15% OF THE SECTION WITHOUT SPECIAL REINFORCEMENT. MECHANICAL CONTRACTOR'S WORK AND TIES WITH THE STEEL MEMBERS TO BE RECONCILED. NON–SHRINKING GROUT CRD–C621 ASTM C1107, WILL BE USED UNDER BEARING PLATES, TEMP. RANGE 45° TO 90° AND 30 MINUTES WORKING TIME. BELOW GRADE STEEL PROTECTION 3" OF CONCRETE AND 4" MASONRY, PROVIDE 1/4" THICK SETTING PLATES AT BEAMS BEARING ON MASONRY OR CONCRETE. THE PLATE 2–3/8Ø X 6" HEADED STUDS SHOP WELDED TO THE PLATE AND EMBEDDED TO THE WALL. USE HEAVY WASHER AT ALL ANCHOR BOLTS. ANGLE SUPPORTS FOR ALL METAL DECK RIBS AT COLUMNS. COORDINATE THE MACHINING DIMENSIONS WITH THE SHOP DRAWINGS AND COORDINATE ANY DISCREPANCY WITH THE ENGINEER.

13. WHERE STEEL H–PILINGS IS USES WILL BE IN ACCORDANCE WITH ASTM A572, GR. 50 OR AS PER SPECIFIC INSTRUCTIONS ON THE DRAWINGS.

STRUCTURAL DESIGN CRITERIA:

A. IBC 2012, ASCE–7–10, MINIMUM DESIGN LOADS:
   BASIC WIND SPEED 170MPH
   IBC 2012, 1609B, CATEGORY IV BUILDING
   *STRUCTURAL DESIGN CALCULATED TO MEET WIND SPEED 170 MPH WITH CONSIDERATION OF ROUND TANK OBJECTS
B. ACI 318 FOR CONCRETE (LATEST EDITION)
C. ASTM FOR STEEL

REV.	DATE	DESCRIPTION	BY
A	10–25–19	AS–BUILT MARKUPS	LHN

(A) POST TENSION NOTES AND SPECIFICATIONS REPLACED ENTIRELY WITH THE VECP DESIGNED BY CARUBBA ENGINEERING. CONCRETE AND REINFORCING NOTES AND STRUCTURAL NOTES REPLACED WITH CARUBBA ENGINEERING DESIGN OF THE VECP ONLY AS THESE NOTES RELATE TO THE WORK INCLUDED IN THE VECP. SEE SUL–0159 FOR VECP DESIGN.

THIS DOCUMENT ORIGINALLY ISSUED AND SEALED BY IVAN MANDICH, LICENCE No. 15570 ON 2-6-15.

Trigon
Quality ▲ Commitment ▲ Client Service

TRIGON DWG. NO. SA-01

TRIGON ASSOCIATES, LLC
1515 POYDRAS STREET
SUITE 2200
NEW ORLEANS, LA 70112
TEL: 504-585-5767
trigonassociates.com

SEWERAGE AND WATER BOARD OF NEW ORLEANS

CONTRACT No. 1369

HMGP EMERGENCY FUEL STORAGE
RETROFIT POWER PLANT
MAIN WATER PURIFICATION PLANT POWER COMPLEX

STRUCTURAL GENERAL NOTES

DR:	SJ CLARK
CK:	GA KOLENOVSKY
AP:	LH NAGRATH
LAST EDIT:	
SCALE:	1"=20'-0"
DATE:	JANUARY 28, 2015

GENERAL SUPERINTENDENT

DWG. No. 12098-W8

SET NO: SHEET NO: 16 OF 72

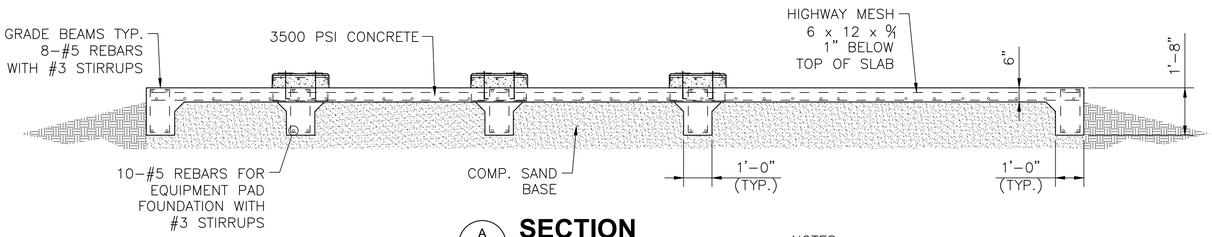

A / - **SECTION**

SCALE: 3/8"=1'-0"

NOTES:
1. SUBMIT FOUNDATION PLAN TO ENGINEER PER MANUFACTURERS REQUIREMENTS.
2. MAXIMUM SPACING BETWEEN GRADE BEAMS IS 20 FEET.
3. EQUIPMENT PADS/FOUNDATION TO BE PROVIDED UNDER EQUIPMENT AND ELECTRICAL/CONTROLS SUPPORTS. LAYOUT AND SIZE MAY BE ADJUSTED ACCORDING TO EQUIPMENT REQUIREMENTS AT NO ADDITIONAL COST TO THE OWNER.

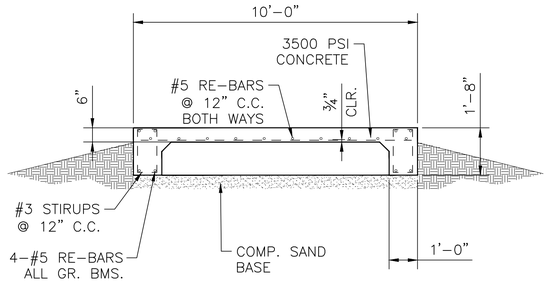

B / - **SECTION**

SCALE: 3/8"=1'-0"

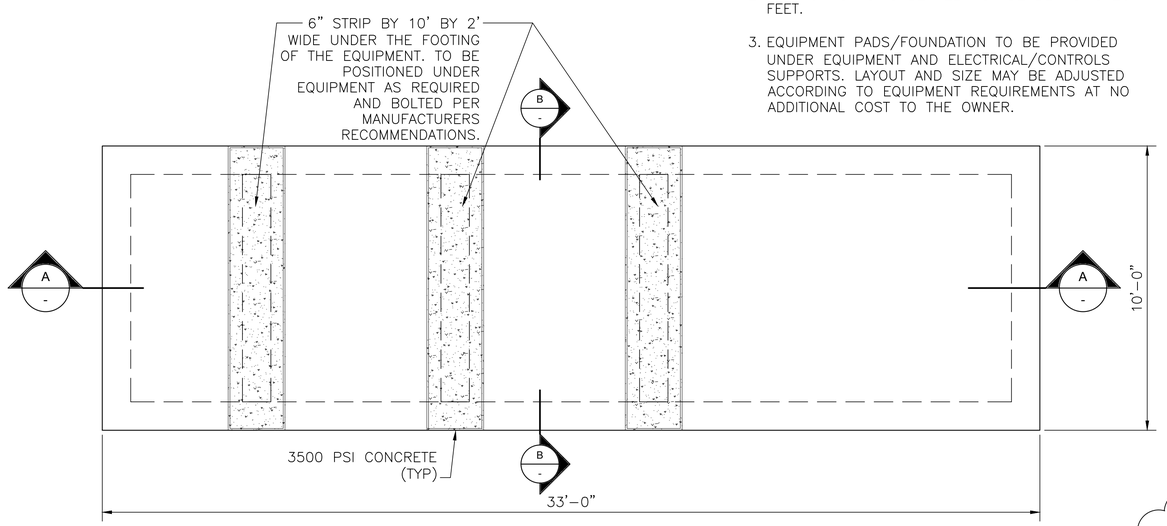

FIRE SUPPRESSION SYSTEM FOUNDATION - PLAN

SCALE: 3/8"=1'-0"

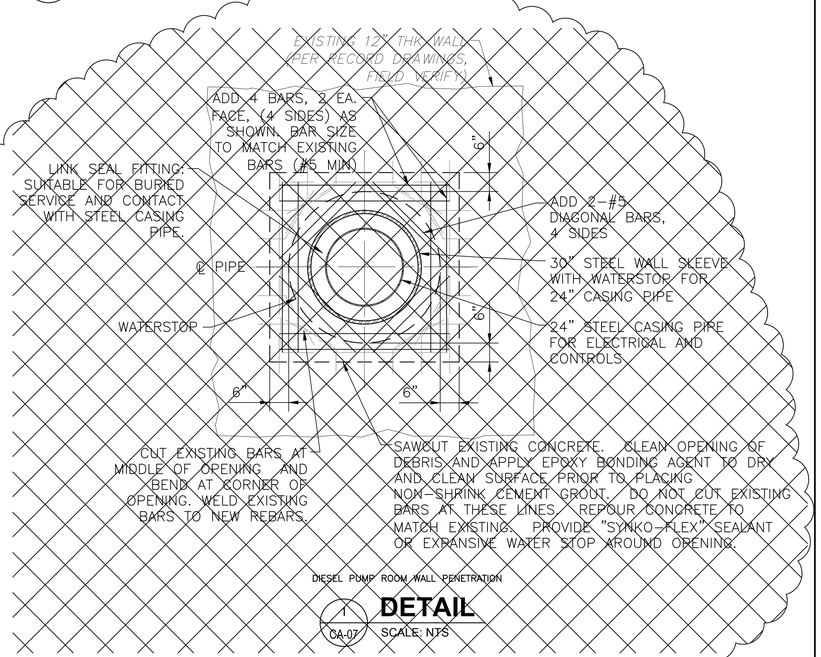

DIESEL PUMP ROOM WALL PENETRATION

1 / CA-07 **DETAIL**

SCALE: NTS

SEE SUL–0243 FOR HAND SKETCHED RECORD DRAWINGS. JACK AND BORE REPLACED WITH OPEN CUT PER FCO–009/RFQ–001. LINKSEAL INSTALLED ON INSIDE AND OUTSIDE OF DIESEL PUMP ROOM.

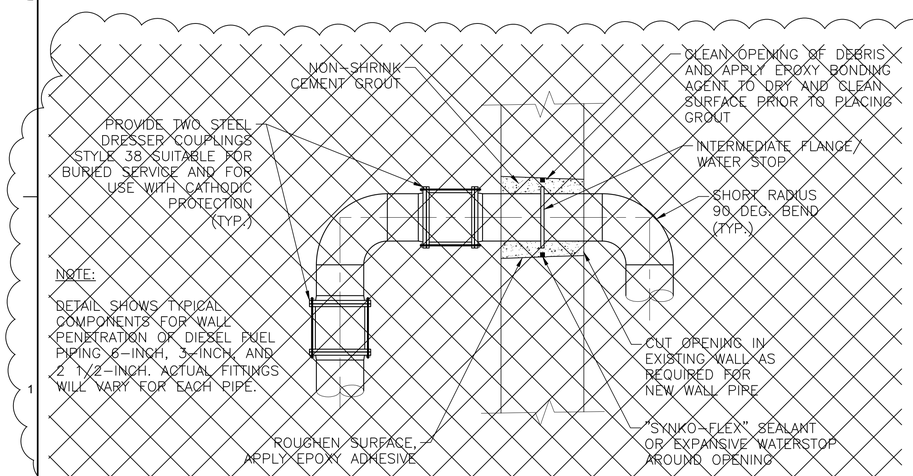

DETAIL - DIESEL PUMP ROOM WALL PENETRATIONS

2 / X

SCALE: NTS

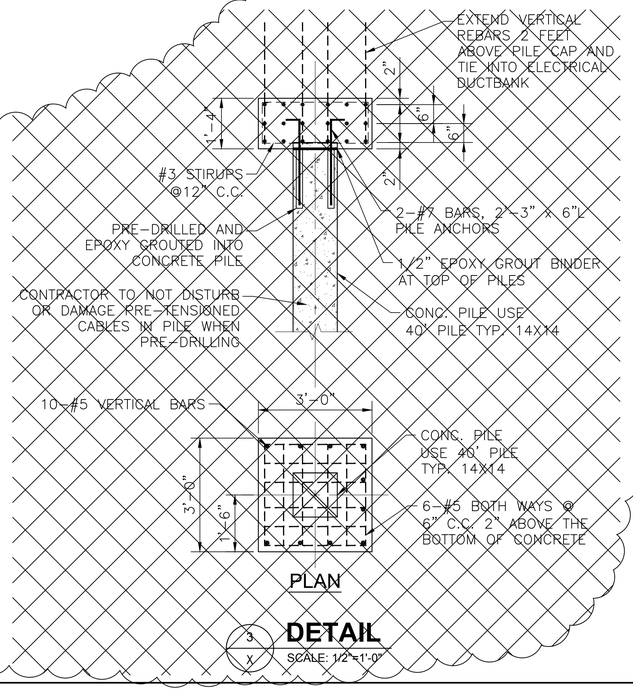

PLAN

3 / X **DETAIL**

SCALE: 1/2"=1'-0"

REV.	DATE	DESCRIPTION	BY
A	10-25-19	AS-BUILT MARKUPS	LHN

SEWERAGE AND WATER BOARD OF NEW ORLEANS

CONTRACT No. 1369

HMGP EMERGENCY FUEL STORAGE
RETROFIT POWER PLANT
MAIN WATER PURIFICATION PLANT POWER COMPLEX

FIRE SUPPRESSION AND WALL PENETRATIONS

THIS DOCUMENT ORIGINALLY ISSUED AND SEALED BY IVAN MANDICH, LICENCE No. 15570 ON 2-6-15. THIS DOCUMENT SHOULD NOT BE CONSIDERED A CERTIFIED DOCUMENT.

Trigon
Quality ▲ Commitment ▲ Client Service

TRIGON ASSOCIATES, LLC
1515 POYDRAS STREET
SUITE 2200
NEW ORLEANS, LA 70112
TEL: 504-585-5767

trigonassociates.com

TRIGON DWG. NO.	SA-02
DR:	SJ CLARK
CK:	GA KOLENOVSKY
AP:	LH NAGRATH
LAST EDIT:	
SCALE:	1"=20'-0"
DATE:	JANUARY 28, 2015
DWG. No.	12098-W8
SET NO:	
SHEET NO:	17 OF 72

GENERAL SUPERINTENDENT

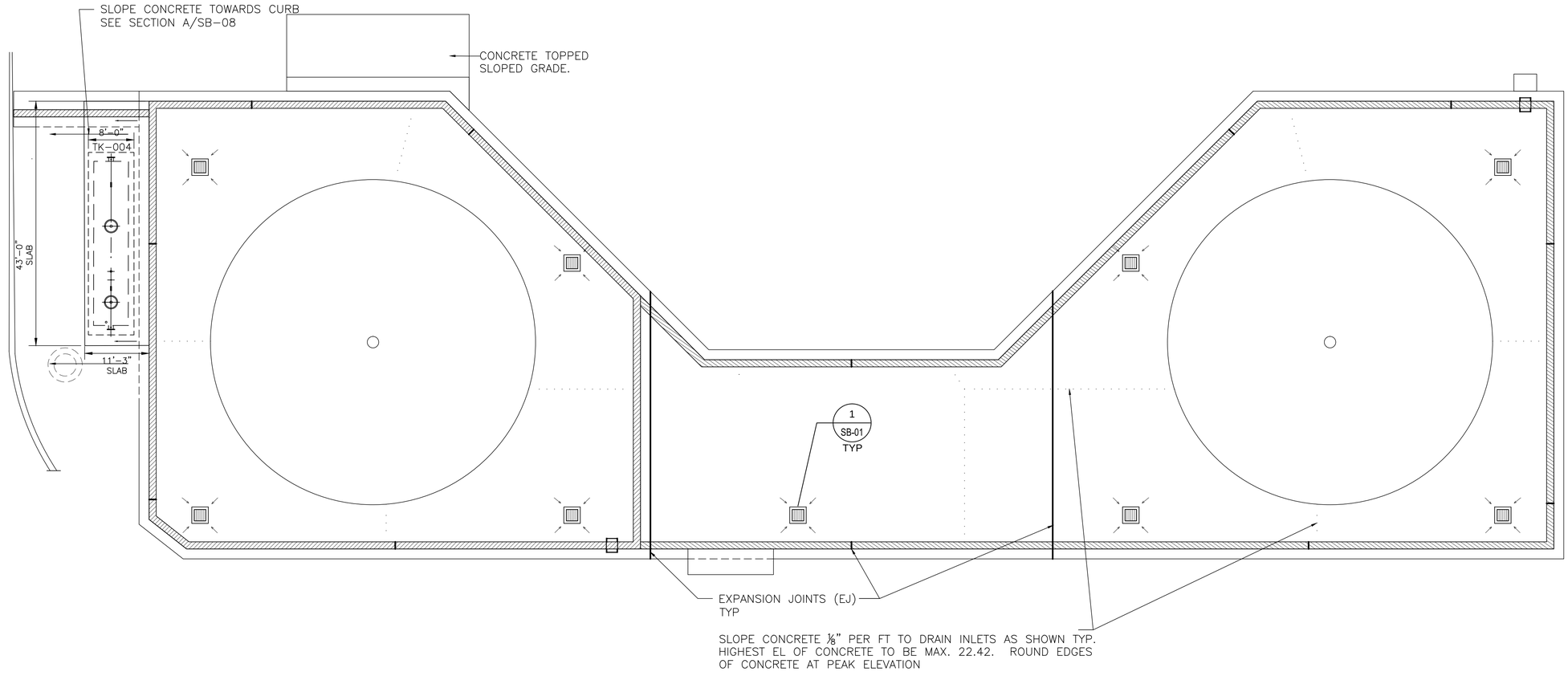

SLOPING PLAN

SCALE:3/32"=1'-0"

LEGEND:

HIGHEST EL FROM DRAIN INLET

DRAIN INLET, TYP OF 9
FLOOR EL 22.00

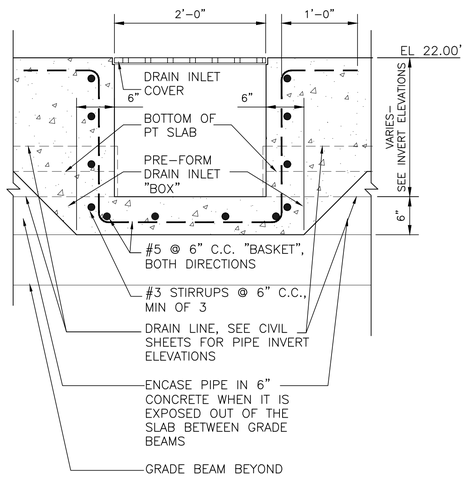

A SB-01 **SECTION- DRAIN INLET**

SCALE:1"=1'-0"

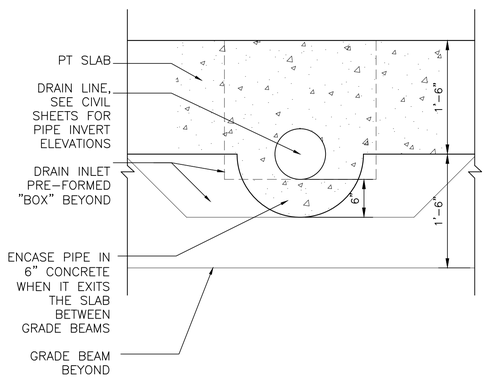

B SB-01 **SECTION- DRAIN INLET**

SCALE:1"=1'-0"

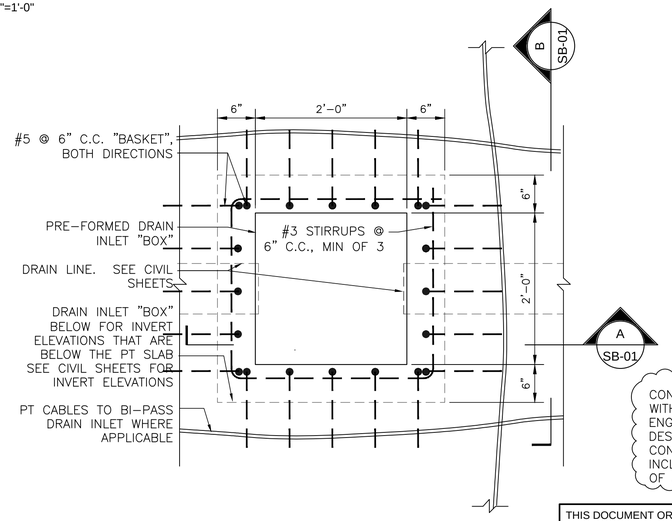

1 SB-01 **PLAN- DRAIN INLET**

SCALE:1"=1'-0"

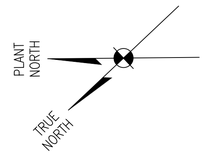

NOTES:

1. SLOPING OF POST TENSION CONCRETE SLAB TO BE ACHIEVED INTEGRAL AS PART OF THE INITIAL POUR.
2. 6x6 WW MESH W2.9xW2.9; MUST BE 1 INCH BELOW THE TOP OF SLAB, AS SLOPED, TYP.

REV.	DATE	DESCRIPTION	BY
A	10-25-19	AS-BUILT MARKUPS	LHN

A: CONCRETE CONTAINMENT DESIGN REPLACED WITH VECP DESIGNED BY CARRUBA ENGINEERING, SEE SUL-0159 FOR VECP DESIGN. AS-BUILT DRAWINGS FOR CONTAINMENT PROVIDED BY RLH ARE INCLUDED AS AN APPENDIX TO THIS SET OF AS-BUILT DRAWINGS.

SEWERAGE AND WATER BOARD
OF NEW ORLEANS

CONTRACT No. 1369

HMGP EMERGENCY FUEL STORAGE
RETROFIT POWER PLANT
MAIN WATER PURIFICATION PLANT POWER COMPLEX

FUEL STORAGE TANK AREA
SLOPING PLAN

THIS DOCUMENT ORIGINALLY ISSUED AND SEALED BY IVAN MANDICH, LICENCE No. 15570 ON 2-6-15.

Trigon
Quality ▲ Commitment ▲ Client Service

TRIGON DWG. NO. SB-01

TRIGON ASSOCIATES, LLC
1515 POYDRAS STREET
SUITE 2200
NEW ORLEANS, LA 70112
TEL: 504-585-5767

trigonassociates.com

DR.	K MCALLISTER
CK:	I MANDICH
AP:	I MANDICH
LAST EDIT:	
SCALE:	AS NOTED
DATE:	JANUARY 28, 2015

GENERAL SUPERINTENDENT

DWG. No. 12098-W8

SET NO: SHEET NO: 18 OF 72

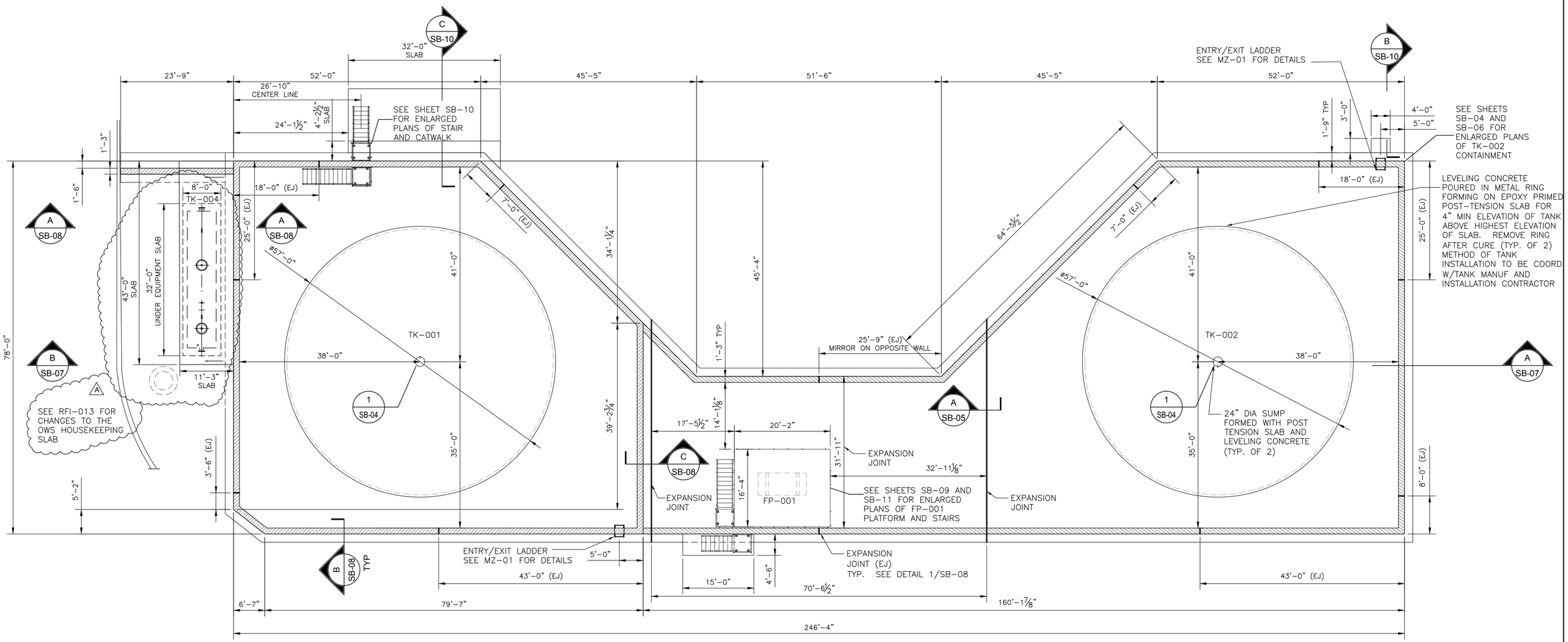

PLAN

SCALE:3/32"=1'-0"

NOTES:

1. SIZE OF OWS IS APPROXIMATE. SLAB UNDER EQUIPMENT SHALL ACCOMMODATE MANUFACTURER SIZING, RECOMMENDATIONS, AND PENETRATIONS THROUGH THE SLAB. CONTRACTOR TO VERIFY INSTALLATION MEANS AND METHODS W/TANK MANUFACTURER.

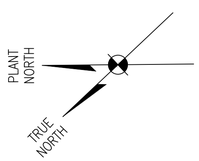

REV.	DATE	DESCRIPTION	BY
A	10-25-19	AS-BUILT MARKUPS	LHN

A CONCRETE CONTAINMENT DESIGN REPLACED WITH VECP DESIGNED BY CARRUBA ENGINEERING, SEE SUL-0159 FOR VECP DESIGN. AS-BUILT DRAWINGS FOR CONTAINMENT PROVIDED BY RLH ARE INCLUDED AS AN APPENDIX TO THIS SET OF AS-BUILT DRAWINGS.

SEWERAGE AND WATER BOARD OF NEW ORLEANS

CONTRACT No. 1369

HMGP EMERGENCY FUEL STORAGE RETROFIT POWER PLANT
MAIN WATER PURIFICATION PLANT POWER COMPLEX

FUEL STORAGE TANK AREA PLAN

THIS DOCUMENT ORIGINALLY ISSUED AND SEALED BY IVAN MANDICH, LICENCE No. 15570 ON 2-6-15. THIS DOCUMENT SHOULD NOT BE CONSIDERED A CERTIFIED DOCUMENT.

Trigon
Quality ▲ Commitment ▲ Client Service
TRIGON DWG. NO. SB-02

TRIGON ASSOCIATES, LLC
1515 POYDRAS STREET
SUITE 2200
NEW ORLEANS, LA 70112
TEL: 504-585-5767
trigonassociates.com

DR.	K MCALLISTER
CK:	I MANDICH
AP:	I MANDICH
LAST EDIT:	
SCALE:	AS NOTED
DATE:	JANUARY 28, 2015

GENERAL SUPERINTENDENT

DWG. No. 12098-W8

SET NO: SHEET NO. 19 OF 72

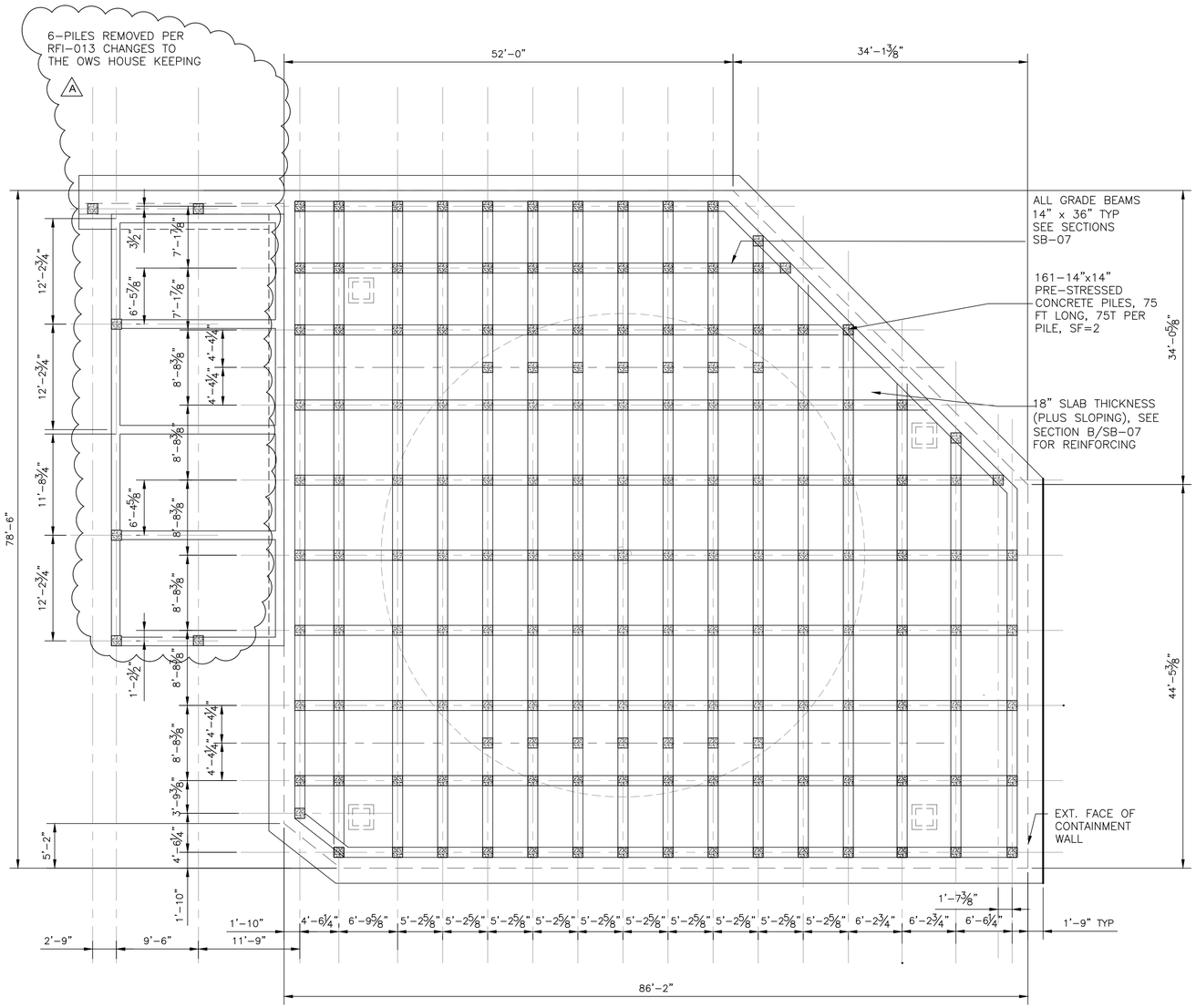

ENLARGED PLAN- FOUNDATION / PILES

SCALE:1/8"=1'-0"

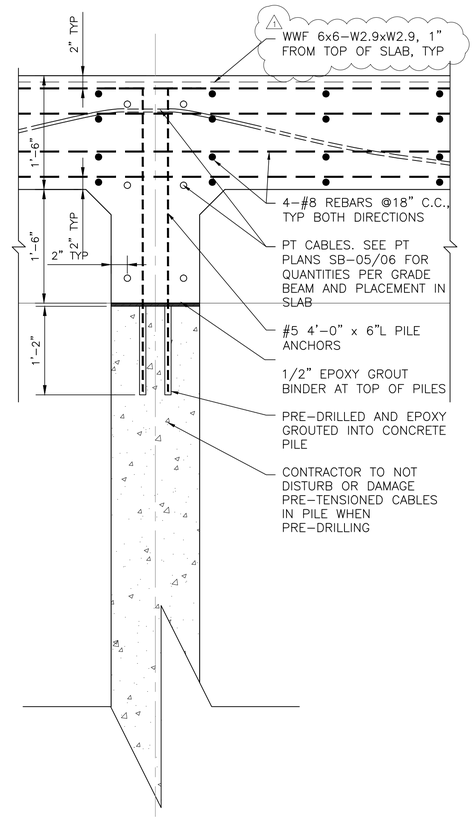

1 SB-07 **DETAIL- PILE**

SCALE:1"=1'-0"

NOTES:

1. SEE SPECIFICATION 31 62 13.19 PRECAST CONCRETE PILES FOR PILE DRIVING: LOCATION OF PILES; PLUMBNESS OF PILES; TOP OF PILE ELEVATION; RECORDATION OF PILE DRIVING.
2. TYP. 14x14 PRE–STRESSED CONCRETE PILES:

   6 TOTAL (TK–004 SLAB), 70' LONG, 50T LOAD CAPACITY, ULTIMATE LOAD CAPACITY 100T/PILE, SF.=2

   161 TOTAL (TK–001 CONTAINMENT), 75' LONG, 75T LOAD CAPACITY. ULTIMATE LOAD CAPACITY 150T/PILE, SF=2

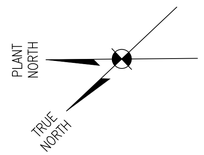

REV.	DATE	DESCRIPTION	BY
A	10–25–19	AS–BUILT MARKUPS	LHN
1	3–27–15	REVISED DETAIL "1" CALL–OUT (ADD.4)	ICM

A CONCRETE CONTAINMENT DESIGN REPLACED WITH VECP DESIGNED BY CARRUBA ENGINEERING, SEE SUL–0159 FOR VECP DESIGN. AS–BUILT DRAWINGS FOR CONTAINMENT PROVIDED BY RLH ARE INCLUDED AS AN APPENDIX TO THIS SET OF AS–BUILT DRAWINGS.

SEWERAGE AND WATER BOARD OF NEW ORLEANS

CONTRACT No. 1369

HMGP EMERGENCY FUEL STORAGE RETROFIT POWER PLANT
MAIN WATER PURIFICATION PLANT POWER COMPLEX

FUEL STORAGE TANK AREA (TK-001) FOUNDATION PLAN

THIS DOCUMENT ORIGINALLY ISSUED AND SEALED BY IVAN MANDICH, LICENCE No. 15570 ON 2-6-15. THIS DOCUMENT SHOULD NOT BE CONSIDERED A CERTIFIED DOCUMENT.

Trigon
Quality ▲ Commitment ▲ Client Service

TRIGON DWG. NO. SB-03

TRIGON ASSOCIATES, LLC
1515 POYDRAS STREET
SUITE 2200
NEW ORLEANS, LA 70112
TEL: 504-585-5767

trigonassociates.com

DR.	K MCALLISTER
CK:	I MANDICH
AP:	I MANDICH
LAST EDIT:	
SCALE:	AS NOTED
DATE:	JANUARY 28, 2015

GENERAL SUPERINTENDENT

DWG. No. 12098-W8

SET NO: SHEET NO: 20 OF 72

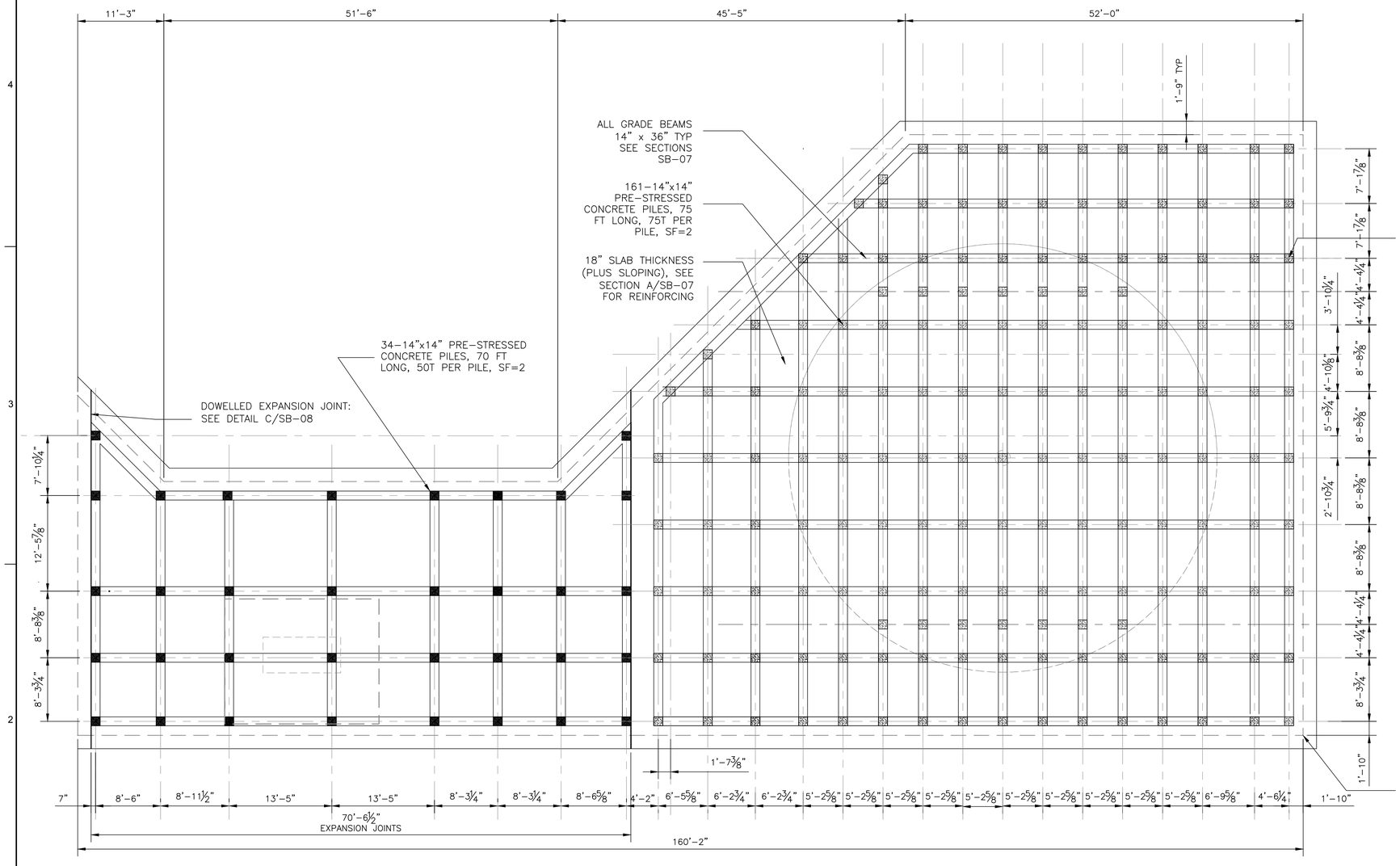

ENLARGED PLAN- FOUNDATION / PILES

SCALE:1/8"=1'-0"

2 SB-07 DETAIL- SUMP, TK-001 / TK-002

SCALE:1-1/2"=1'-0"

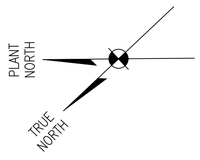

NOTES:

1. SEE SPECIFICATION 31 62 13.19 PRECAST CONCRETE PILES FOR PILE DRIVING.
2. TYP. 14x14 PRE-STRESSED CONCRETE PILES:

   34 TOTAL, 70' LONG, 50T LOAD CAPACITY, ULTIMATE LOAD CAPACITY 100T/PILE, SF.=2

   161 TOTAL (TK-002 CONTAINMENT), 75' LONG, 75T LOAD CAPACITY. ULTIMATE LOAD CAPACITY 150T/PILE, SF=2

REV.	DATE	DESCRIPTION	BY
A	10-25-19	AS-BUILT MARKUPS	LHN
1	3-27-15	REVISED DETAIL "2" CALL-OUT (ADD.4)	ICM

A CONCRETE CONTAINMENT DESIGN REPLACED WITH VECP DESIGNED BY CARRUBA ENGINEERING, SEE SUL-0159 FOR VECP DESIGN. AS-BUILT DRAWINGS FOR CONTAINMENT PROVIDED BY RLH ARE INCLUDED AS AN APPENDIX TO THIS SET OF AS-BUILT DRAWINGS.

SEWERAGE AND WATER BOARD OF NEW ORLEANS

CONTRACT No. 1369

HMGP EMERGENCY FUEL STORAGE RETROFIT POWER PLANT
MAIN WATER PURIFICATION PLANT POWER COMPLEX

FUEL STORAGE TANK AREA- TANK-002 FOUNDATION PLAN

THIS DOCUMENT ORIGINALLY ISSUED AND SEALED BY IVAN MANDICH, LICENCE No. 15570 ON 2-6-15. THIS DOCUMENT SHOULD NOT BE CONSIDERED A CERTIFIED DOCUMENT.

Trigon
Quality ▲ Commitment ▲ Client Service

TRIGON ASSOCIATES, LLC
1515 POYDRAS STREET
SUITE 2200
NEW ORLEANS, LA 70112
TEL: 504-585-5767

trigonassociates.com

TRIGON DWG. NO. SB-04

DR:	K MCALLISTER
CK:	I MANDICH
AP:	I MANDICH
LAST EDIT:	
SCALE:	AS NOTED
DATE:	JANUARY 28, 2015

GENERAL SUPERINTENDENT

DWG. No. 12098-W8

SET NO: SHEET NO: 21 OF 72

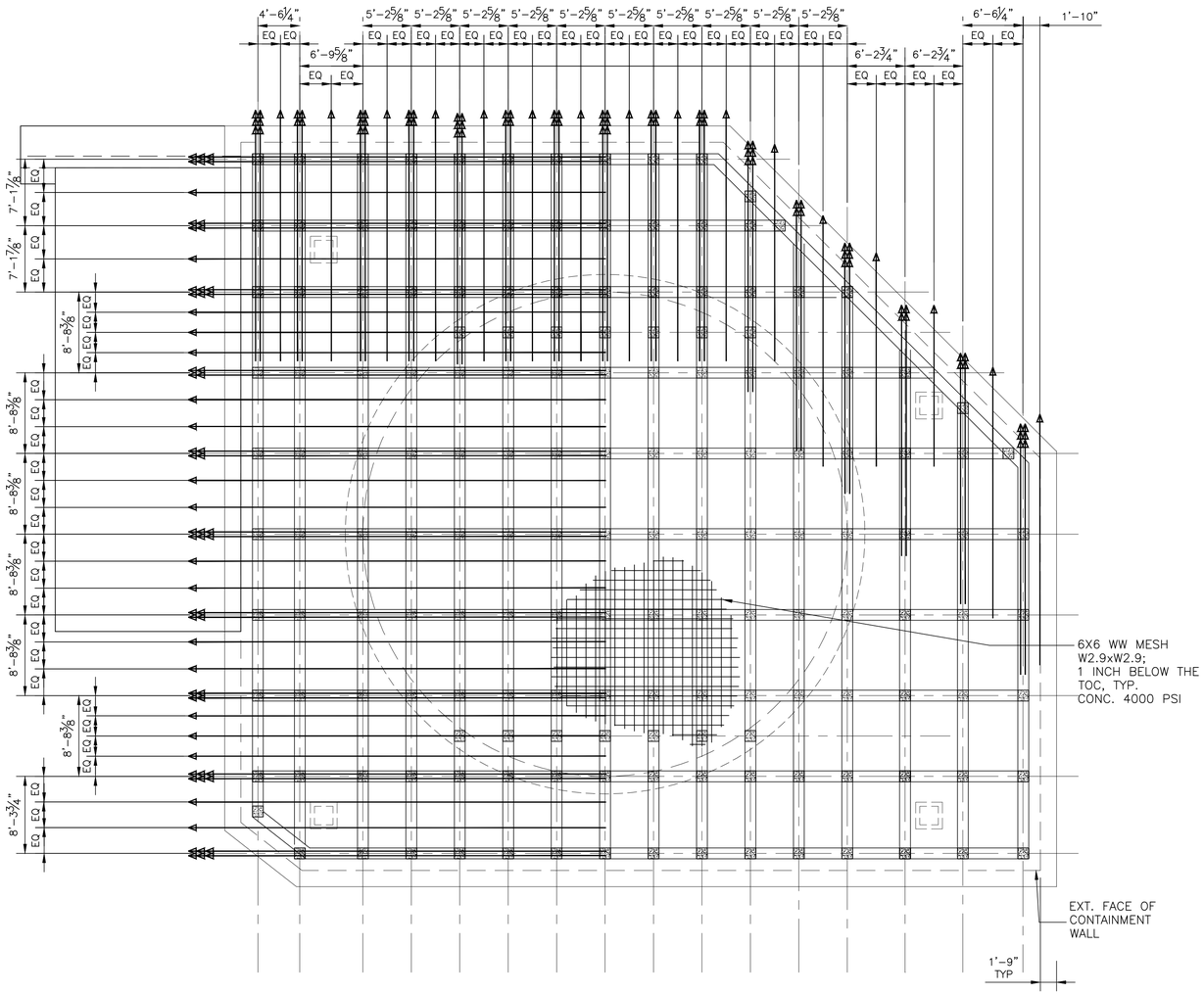

ENLARGED PLAN- POST TENSION

SCALE:1/8"=1'-0"

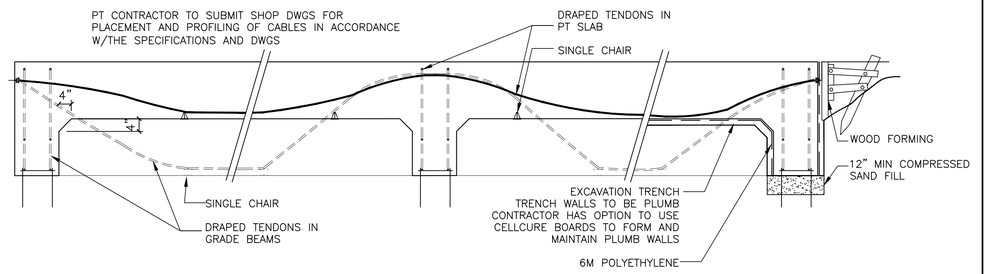

SCHEMATIC TYP POST TENSION INSTALLATION / EXCAVATION

SCALE:1/2"=1'-0"

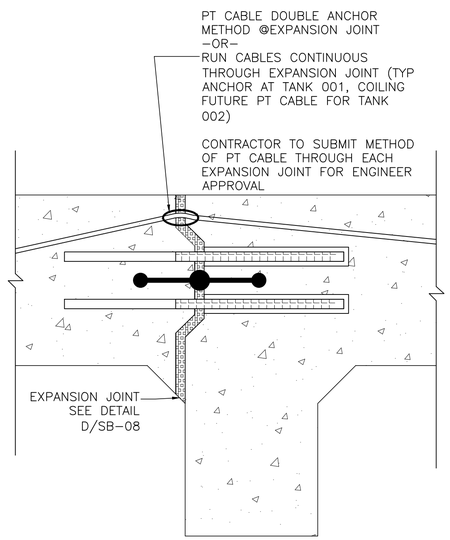

POST TENSION AND EXPANSION JOINTS

A / SB-02

SCALE:1 1/2"=1'-0"

NOTES:

1. SEE SPECIFICATION 03 38 16 POST TENSIONED CONCRETE FOR POST TENSION SLAB
2. CONTRACTOR TO USE CONTINUOUS CABLES, PREPARED FOR THE ENTIRE LENGTH, AND TENSIONED BOTH DIRECTIONS.
3. CONTRACTOR TO USE ANCHORING FROM FACE TO FACE ON THE CONTINUOUS CABLES.
4. MESH 6X6 W2.9xW2.9 WILL BE INSTALLED 1 INCH BELLOW THE TOP OF THE FINISHED SLAB IN THE ENTIRE SLAB AREA.
5. NOTES ON ELONGATION:
   CONTRACTOR WILL INFORM THE ENGINEER OF THE TENSIONING FORCES USED IN OBTAINING THE GIVEN ELONGATION. IF FOUND THAT THE ELONGATION FALLS SHORTER THAN THE PULLING FORCES AS PER CALIBRATED GAUGES, CONTRACTOR WILL PROCEED TO OBTAIN THOSE FORCES. CONTRACTOR TO ACHIEVE THE SPECIFIED ELONGATION. CHECK THE PHYSICAL PROPERTIES OF THE CABLES USED TO MATCH THE MODULUS AND ELONGATION GIVEN.
6. ELONGATION CALCULATIONS SAMPLE:

   PT CONTRACTOR MUST CALCULATE THE ELONGATION AS FOLLOWS:
   LENGTH OF THE CABLE IN FEET TIMES 9.37% AND TENSIONED TO SPECIFICATIONS AND TO THE ALIGNMENT AS SHOWN SEE TYP SECTIONS.

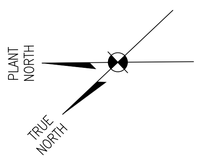

THIS SHEET WAS REPLACED ENTIRELY WITH THE VECP DESIGNED BY CARUBBA ENGINEERING, SEE SUL–0159 FOR VECP DESIGN. AS–BUILT DRAWINGS FOR CONTAINMENT PROVIDED BY RLH ARE INCLUDED AS AN APPENDIX TO THIS SET OF AS–BUILT RECORD DRAWINGS.

REV.	DATE	DESCRIPTION	BY
A	10–25–19	AS–BUILT MARKUPS	LHN

SEWERAGE AND WATER BOARD OF NEW ORLEANS

CONTRACT No. 1369

HMGP EMERGENCY FUEL STORAGE RETROFIT POWER PLANT
MAIN WATER PURIFICATION PLANT POWER COMPLEX

FUEL STORAGE TANK AREA-TK-001
POST TENSION PLAN

THIS DOCUMENT ORIGINALLY ISSUED AND SEALED BY IVAN MANDICH, LICENCE No. 15570 ON 2-6-15. THIS DOCUMENT SHOULD NOT BE CONSIDERED A CERTIFIED DOCUMENT.

Trigon
Quality ▲ Commitment ▲ Client Service

TRIGON ASSOCIATES, LLC
1515 POYDRAS STREET
SUITE 2200
NEW ORLEANS, LA 70112
TEL: 504-585-5767

trigonassociates.com

DR:	K MCALLISTER
CK:	I MANDICH
AP:	I MANDICH
LAST EDIT:	
SCALE:	AS NOTED
DATE:	JANUARY 28, 2015

GENERAL SUPERINTENDENT

DWG. No. 12098-W8

TRIGON DWG. NO. SB-05

SET NO:

SHEET NO: 22 OF 72

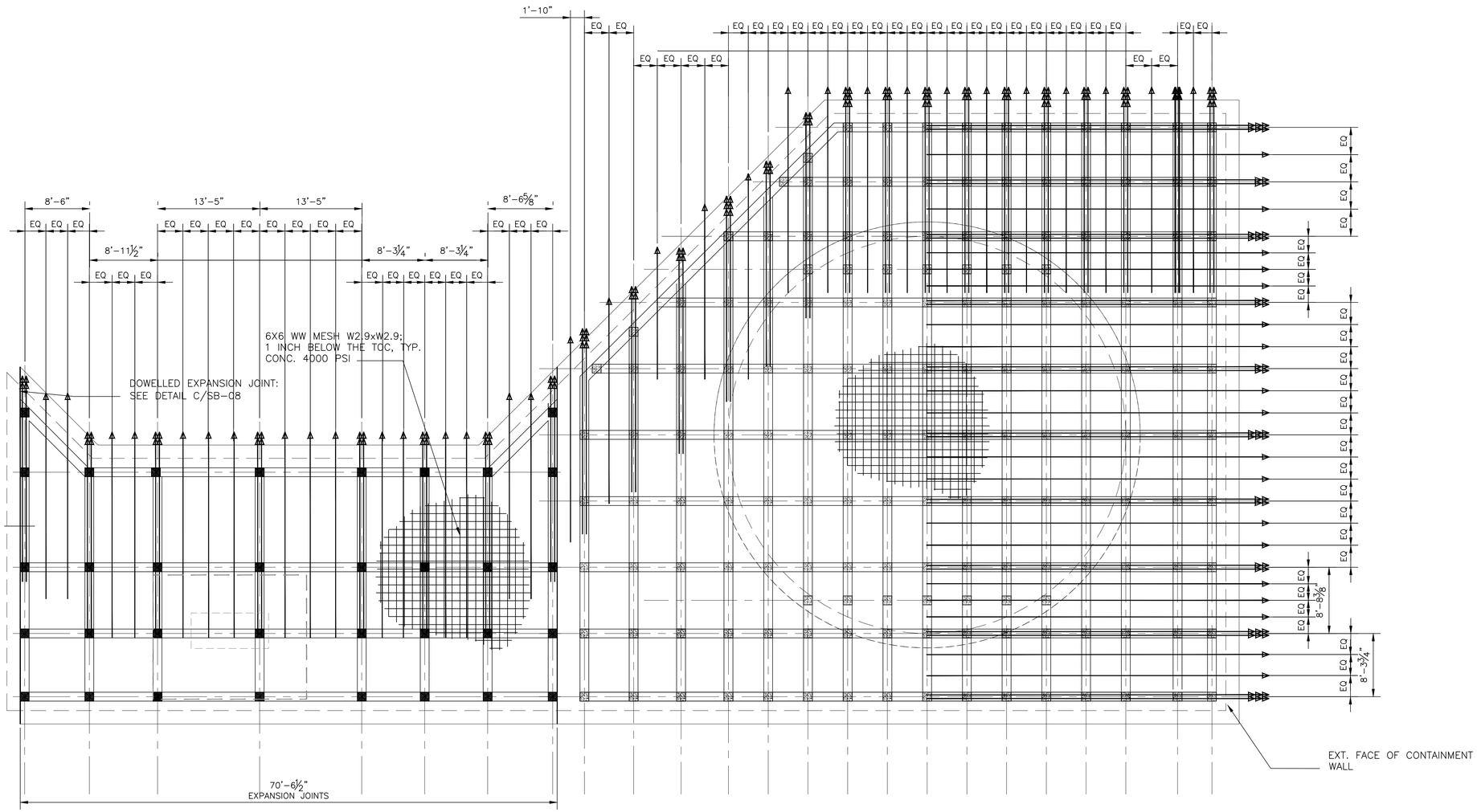

ENLARGED PLAN- POST TENSION

SCALE:1/8"=1'-0"

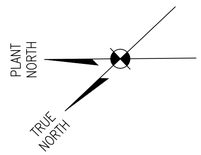

NOTES:

1. SEE SPECIFICATION 03 38 16 POST TENSIONED CONCRETE FOR POST TENSION SLAB
2. CONTRACTOR TO USE CONTINUOUS CABLES, PREPARED FOR THE ENTIRE LENGTH, AND TENSIONED BOTH DIRECTIONS.
3. CONTRACTOR TO USE ANCHORING FROM FACE TO FACE ON THE CONTINUOUS CABLES.
4. MESH 6X6 W2.9xW2.9 WILL BE INSTALLED 1 INCH BELLOW THE TOP OF THE FINISHED SLAB IN THE ENTIRE SLAB AREA.
5. NOTES ON ELONGATION:
   CONTRACTOR WILL INFORM THE ENGINEER OF THE TENSIONING FORCES USED IN OBTAINING THE GIVEN ELONGATION. IF FOUND THAT THE ELONGATION FALLS SHORTER THAN THE PULLING FORCES AS PER CALIBRATED GAUGES, CONTRACTOR WILL PROCEED TO OBTAIN THOSE FORCES. CONTRACTOR TO ACHIEVE THE SPECIFIED ELONGATION. CHECK THE PHYSICAL PROPERTIES OF THE CABLES USED TO MATCH THE MODULUS AND ELONGATION GIVEN.
6. ELONGATION CALCULATIONS SAMPLE:

   PT CONTRACTOR MUST CALCULATE THE ELONGATION AS FOLLOWS:
   LENGTH OF THE CABLE IN FEET TIMES 9.37% AND TENSIONED TO SPECIFICATIONS AND TO THE ALIGNMENT AS SHOWN SEE TYP SECTIONS.

REV.	DATE	DESCRIPTION	BY
A	10–25–19	AS–BUILT MARKUPS	LHN

THIS SHEET WAS REPLACED ENTIRELY WITH THE VECP DESIGNED BY CARUBBA ENGINEERING, SEE SUL–0159 FOR VECP DESIGN. AS–BUILT DRAWINGS FOR CONTAINMENT PROVIDED BY RLH ARE INCLUDED AS AN APPENDIX TO THIS SET OF AS–BUILT RECORD DRAWINGS.

THIS DOCUMENT ORIGINALLY ISSUED AND SEALED BY IVAN MANDICH, LICENCE No. 15570 ON 2-6-15. THIS DOCUMENT SHOULD NOT BE CONSIDERED A CERTIFIED DOCUMENT.

Trigon
Quality ▲ Commitment ▲ Client Service

TRIGON DWG. NO. SB-06

TRIGON ASSOCIATES, LLC
1515 POYDRAS STREET
SUITE 2200
NEW ORLEANS, LA 70112
TEL: 504-585-5767

trigonassociates.com

SEWERAGE AND WATER BOARD OF NEW ORLEANS

CONTRACT No. 1369

HMGP EMERGENCY FUEL STORAGE
RETROFIT POWER PLANT
MAIN WATER PURIFICATION PLANT POWER COMPLEX

FUEL STORAGE TANK AREA (TK-002)
POST TENSION PLAN

DR.	K MCALLISTER
CK:	I MANDICH
AP:	I MANDICH
LAST EDIT:	
SCALE:	AS NOTED
DATE:	JANUARY 28, 2015

GENERAL SUPERINTENDENT

DWG. No. 12098-W8

SET NO: SHEET NO: 23 OF 72

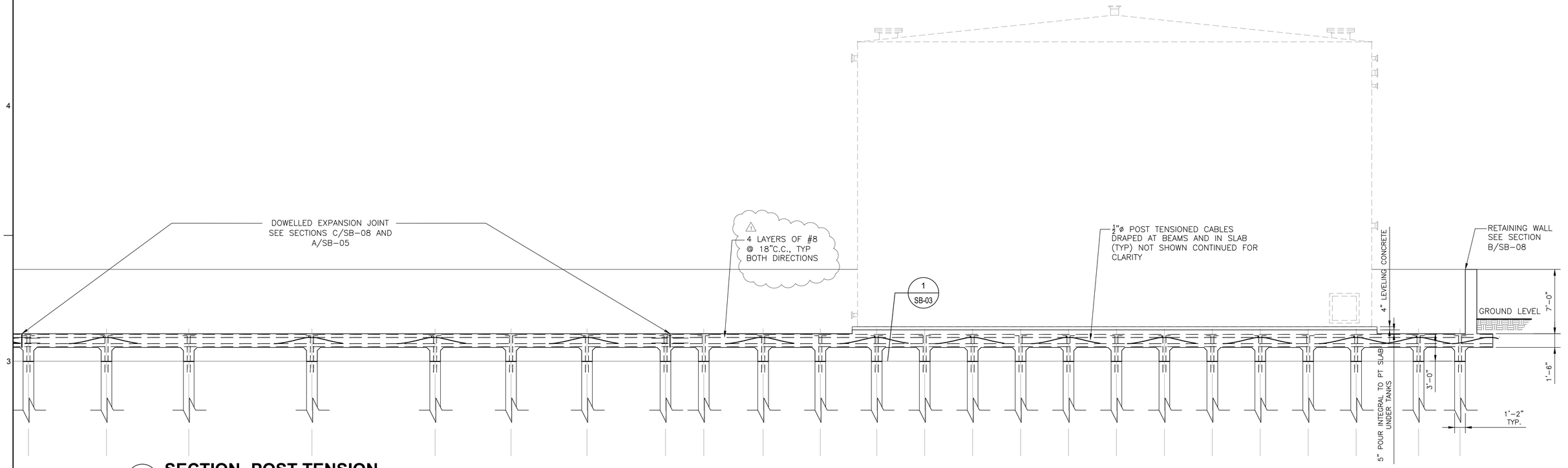

A SB-02 **SECTION- POST TENSION**

SCALE:3/16"=1'-0"

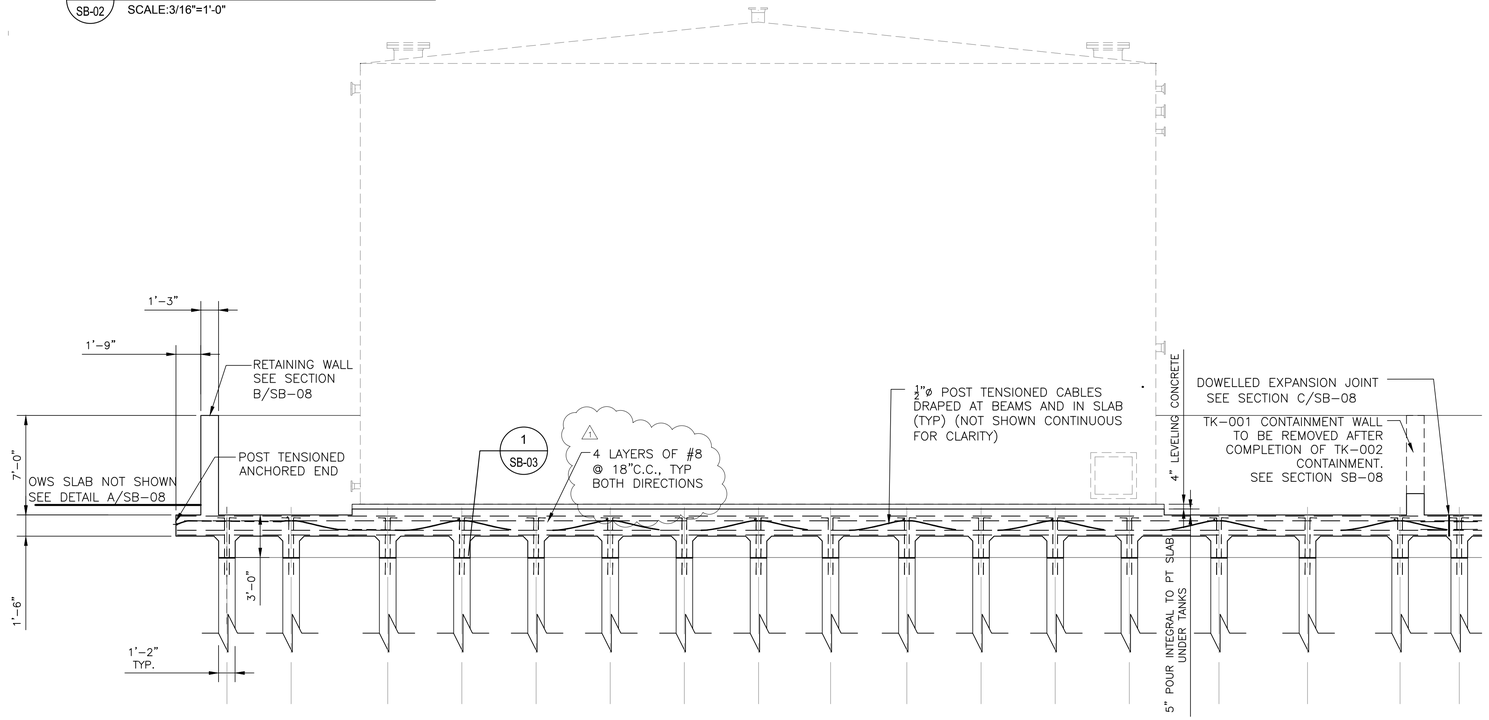

B SB-02 **SECTION- POST TENSION**

SCALE:3/16"=1'-0"

A CONCRETE CONTAINMENT DESIGN REPLACED WITH VECP DESIGNED BY CARRUBA ENGINEERING, SEE SUL-0159 FOR VECP DESIGN. AS-BUILT DRAWINGS FOR CONTAINMENT PROVIDED BY RLH ARE INCLUDED AS AN APPENDIX TO THIS SET OF AS-BUILT DRAWINGS.

THIS DOCUMENT ORIGINALLY ISSUED AND SEALED BY IVAN MANDICH, LICENCE No. 15570 ON 2-6-15. THIS DOCUMENT SHOULD NOT BE CONSIDERED A CERTIFIED DOCUMENT.

Trigon
Quality ▲ Commitment ▲ Client Service

TRIGON DWG. NO. SB-07

TRIGON ASSOCIATES, LLC
1515 POYDRAS STREET
SUITE 2200
NEW ORLEANS, LA 70112
TEL: 504-585-5767

trigonassociates.com

REV.	DATE	DESCRIPTION	BY
A	10-25-19	AS-BUILT MARKUPS	LHN
1	3-27-15	REVISED REBAR CALL-OUT (ADD.4)	ICM

SEWERAGE AND WATER BOARD OF NEW ORLEANS

CONTRACT No. 1369

HMGP EMERGENCY FUEL STORAGE
RETROFIT POWER PLANT
MAIN WATER PURIFICATION PLANT POWER COMPLEX

FUEL STORAGE TANK AREA SECTIONS

DR:	K MCALLISTER
CK:	I MANDICH
AP:	I MANDICH
LAST EDIT:	
SCALE:	AS NOTED
DATE:	JANUARY 28, 2015

GENERAL SUPERINTENDENT

DWG. No. 12098-W8

SET NO: SHEET NO: 24 OF 72

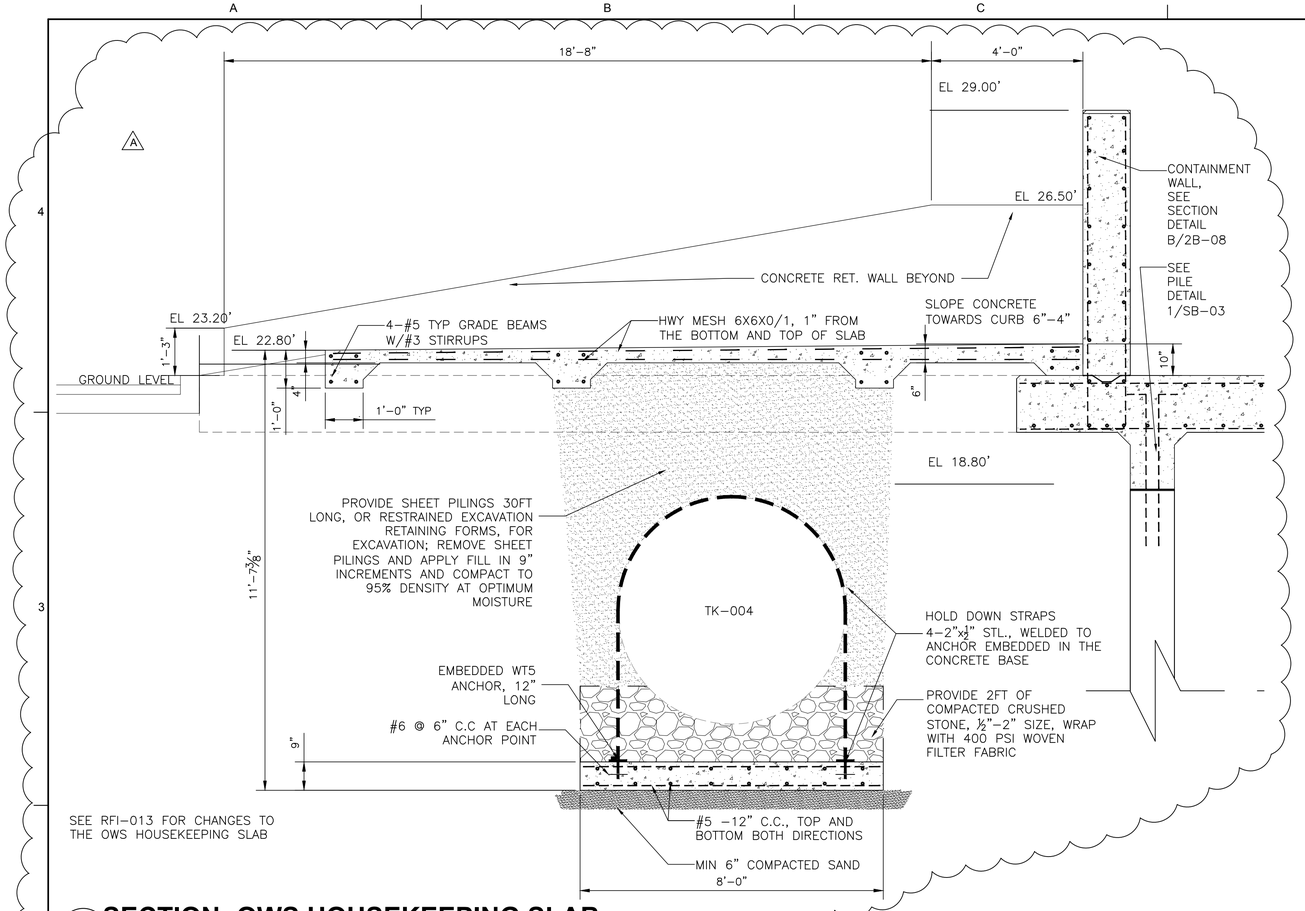

A SB-02 SECTION- OWS HOUSEKEEPING SLAB

SCALE:1/2"=1'-0"

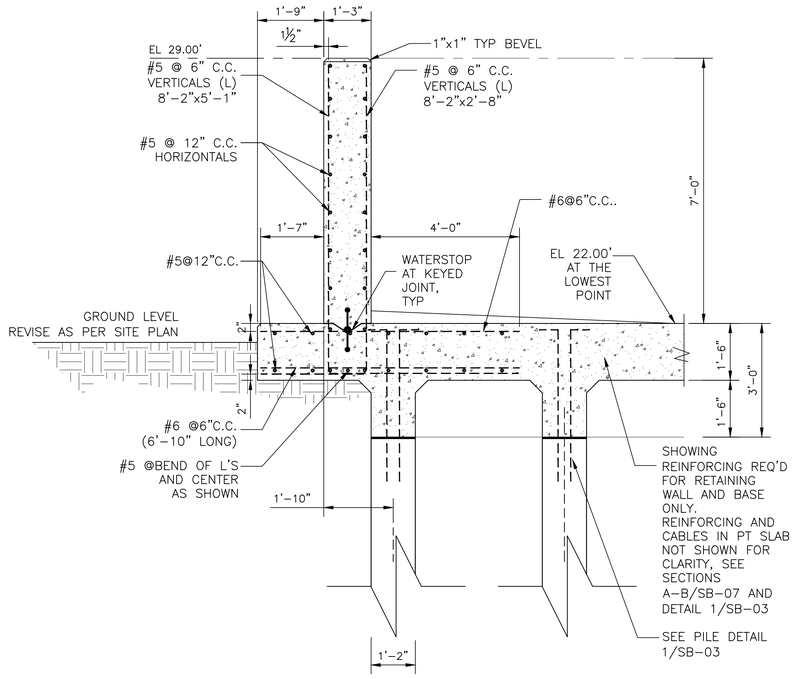

B SB-02 SECTION- RETAINING WALL TYP

SCALE: 1/2"=1'-0"

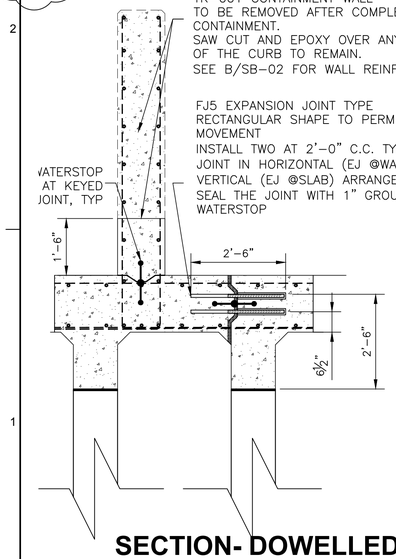

C SB-02 SECTION- DOWELLED EXPANSION JOINT

SCALE: 1/2"=1'-0"

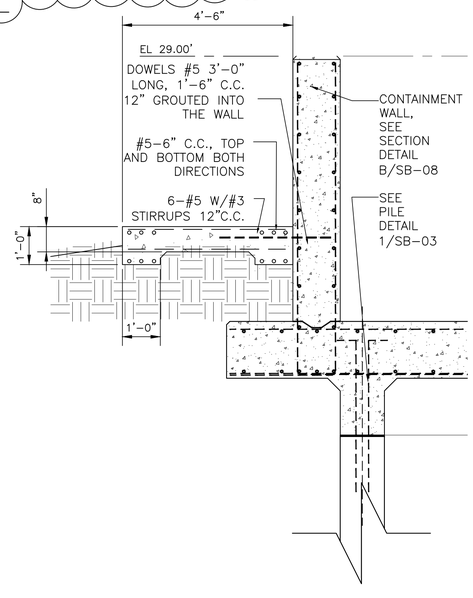

D SB-09 SECTION- STAIR SLAB

SCALE: 1/2"=1'-0"

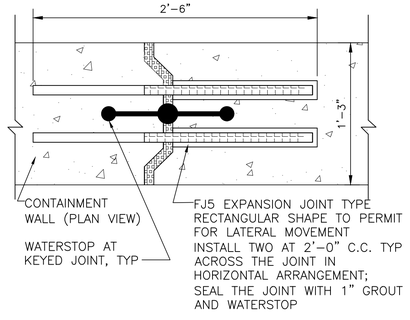

1 SB-02 DETAIL- WALL EXPANSION JOINT

SCALE: 1 1/2"=1'-0"

NOTES:

1. SIZE OF OWS IS APPROXIMATE. SLAB UNDER EQUIPMENT SHALL ACCOMMODATE MANUFACTURER SIZING, RECOMMENDATIONS, AND PENETRATIONS THROUGH THE SLAB. CONTRACTOR TO VERIFY INSTALLATION MEANS AND METHODS W/TANK MANUFACTURER.

REV.	DATE	DESCRIPTION	BY
A	10-25-19	AS-BUILT MARKUPS	LHN

SEWERAGE AND WATER BOARD OF NEW ORLEANS

CONTRACT No. 1369

HMGP EMERGENCY FUEL STORAGE RETROFIT POWER PLANT
MAIN WATER PURIFICATION PLANT POWER COMPLEX

FUEL STORAGE TANK AREA SECTION DETAILS

A ALL WORK ASSOCIATED WITH CONTAINMENT SLAB AND WALLS REPLACED WITH VECP DESIGNED BY CARUBBA ENGINEERING, SEE SUL-0159 FOR VECP DESIGN. AS-BUILT DRAWINGS FOR CONTAINMENT PROVIDED BY RLH ARE INCLUDED AS AN APPENDIX TO THIS SET OF AS-BUILT DRAWINGS.

THIS DOCUMENT ORIGINALLY ISSUED AND SEALED BY IVAN MANDICH, LICENCE No. 15570 ON 2-6-15. THIS DOCUMENT SHOULD NOT BE CONSIDERED A CERTIFIED DOCUMENT.

Trigon
Quality ▲ Commitment ▲ Client Service

TRIGON DWG. NO. SB-08

TRIGON ASSOCIATES, LLC
1515 POYDRAS STREET
SUITE 2200
NEW ORLEANS, LA 70112
TEL: 504-585-5767
trigonassociates.com

DR.	K MCALLISTER
CK:	I MANDICH
AP:	I MANDICH
LAST EDIT:	
SCALE:	AS NOTED
DATE:	JANUARY 28, 2015

GENERAL SUPERINTENDENT

DWG. No. 12098-W8

SET NO: SHEET NO: 25 OF 72

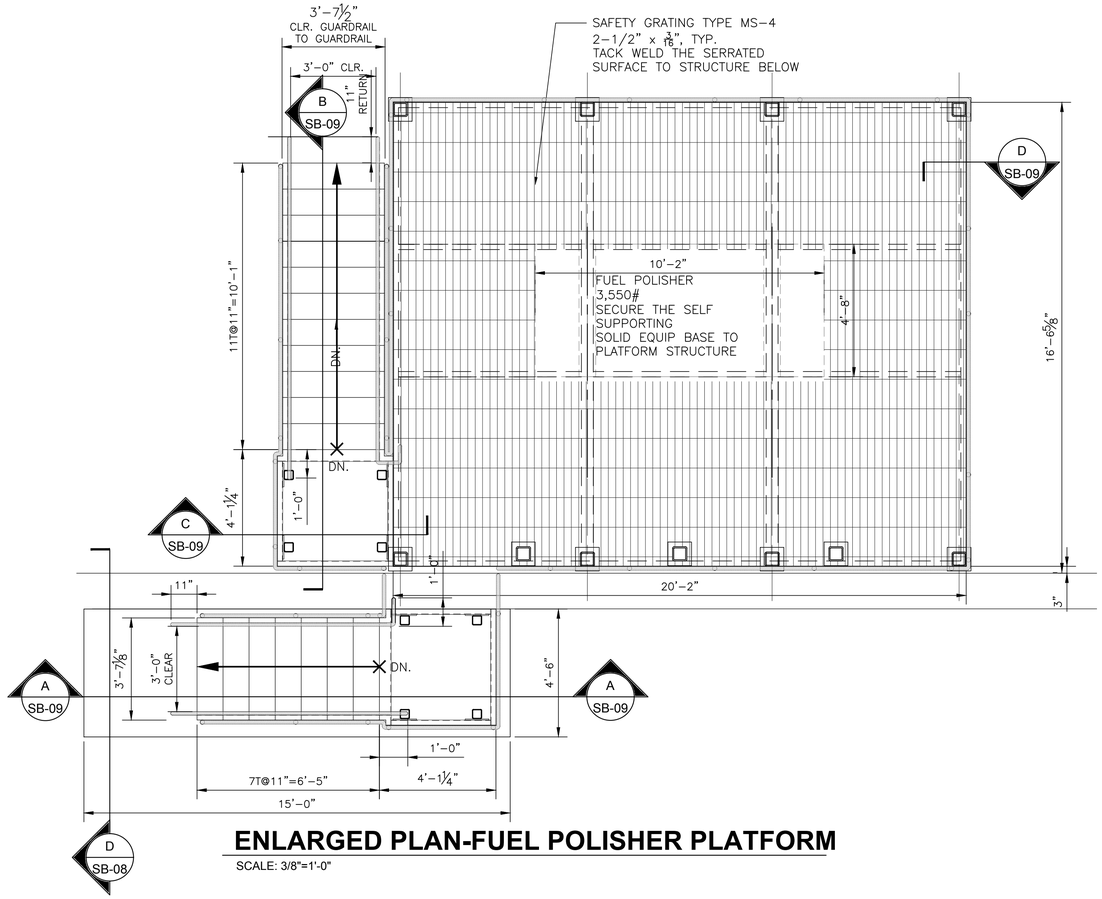

ENLARGED PLAN-FUEL POLISHER PLATFORM

SCALE: 3/8"=1'-0"

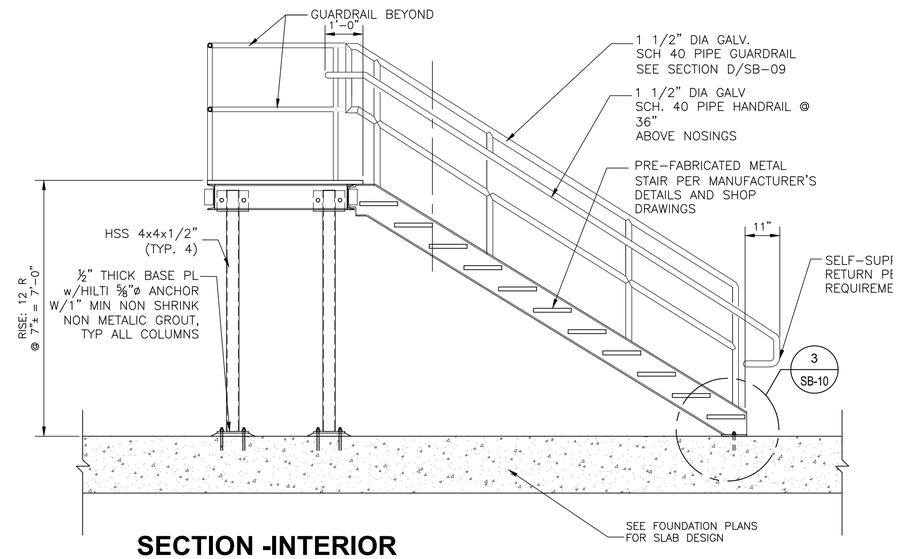

SECTION -INTERIOR CONTAINMENT STAIRS

B SB-09 SCALE: 1/2"=1'-0"

6X6 WW MESH W2.9xW2.9; 1 INCH BELOW THE TOC, TYP. CONC. 4000 PSI

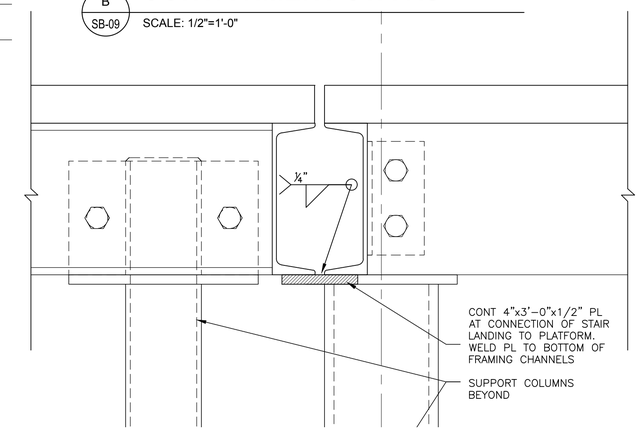

SECTION-STAIR LANDING TO PLATFORM

C SB-09 SCALE: 3"=1'-0"

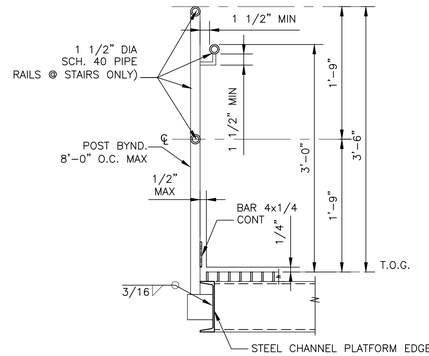

TYP GUARDRAIL / HANDRAIL SECTION

D SB-09 SCALE: 1"=1'-0"

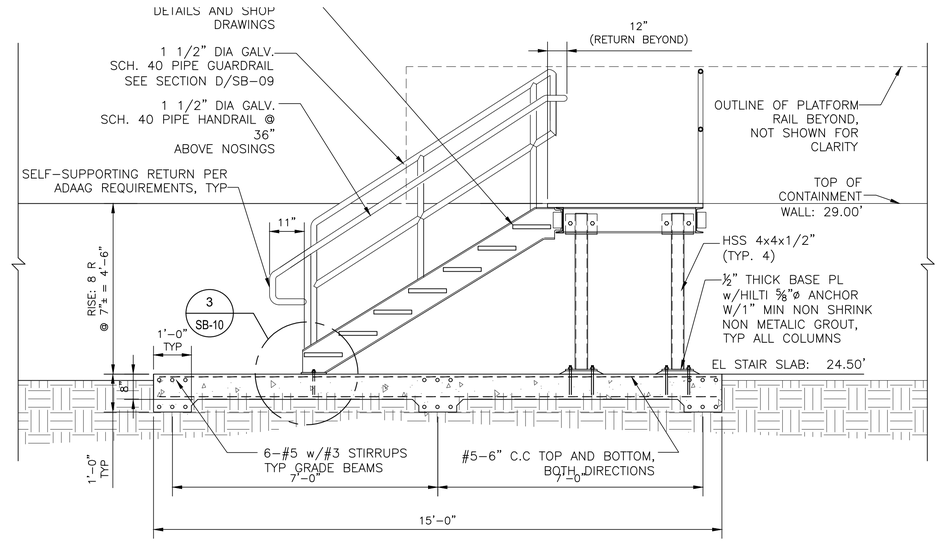

SECTION THROUGH STAIR

A SB-09 SCALE: 1/2"=1'-0"

NOTES:

1. SEE SPECIFICATION 05 51 16 INDUSTRIAL METAL STAIRS FOR STAIRS AND HANDRAILS

A SEE SUL-0241 FOR BASELINE AS-BUILTS

THIS DOCUMENT ORIGINALLY ISSUED AND SEALED BY IVAN MANDICH, LICENCE No. 15570 ON 2-6-15. THIS DOCUMENT SHOULD NOT BE CONSIDERED A CERTIFIED DOCUMENT.

Trigon
Quality ▲ Commitment ▲ Client Service

TRIGON ASSOCIATES, LLC
1515 POYDRAS STREET
SUITE 2200
NEW ORLEANS, LA 70112
TEL: 504-585-5767

trigonassociates.com

TRIGON DWG. NO. SB-09

REV.	DATE	DESCRIPTION	BY
A	10-25-19	AS-BUILT MARKUPS	LHN

SEWERAGE AND WATER BOARD OF NEW ORLEANS

CONTRACT No. 1369

HMGP EMERGENCY FUEL STORAGE
RETROFIT POWER PLANT
MAIN WATER PURIFICATION PLANT POWER COMPLEX

FUEL STORAGE TANK AREA STAIR DETAILS

DR:	K MCALLISTER
CK:	I MANDICH
AP:	I MANDICH
LAST EDIT:	
SCALE:	AS NOTED
DATE:	JANUARY 28, 2015

GENERAL SUPERINTENDENT

DWG. No. 12098-W8

SET NO: SHEET NO: 26 OF 72

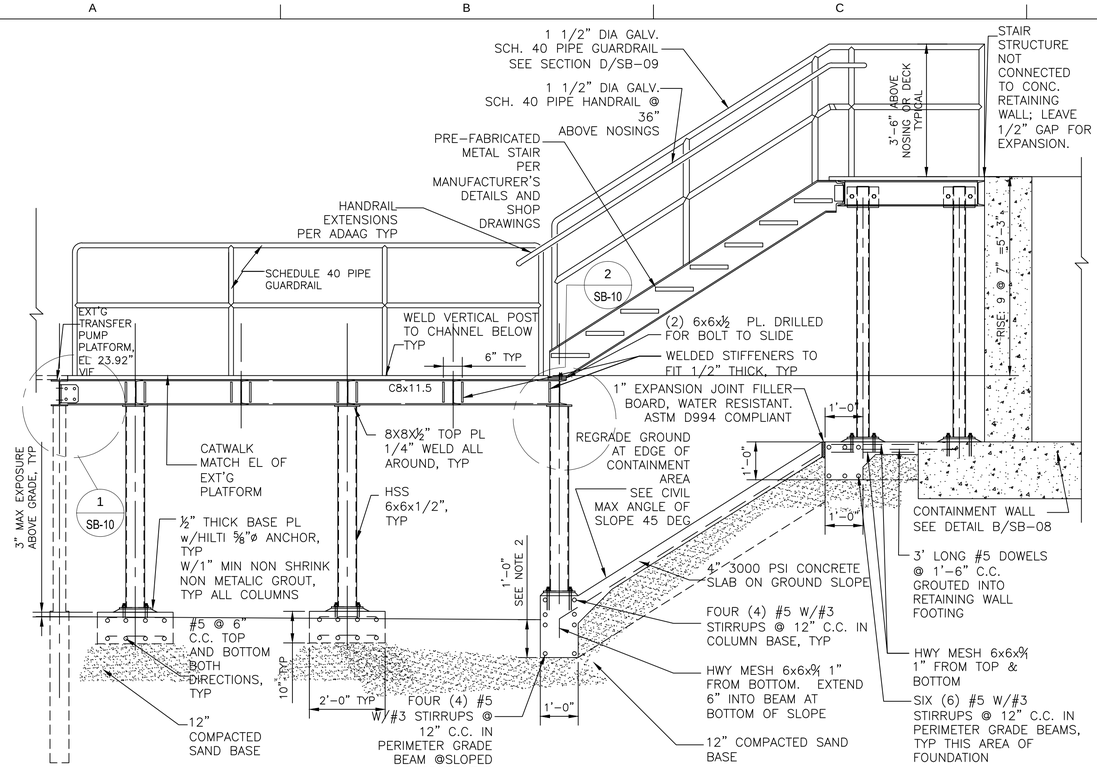

A SB-10 SECTION- CATWALK AND STAIR

SCALE: 1/2"=1'-0"

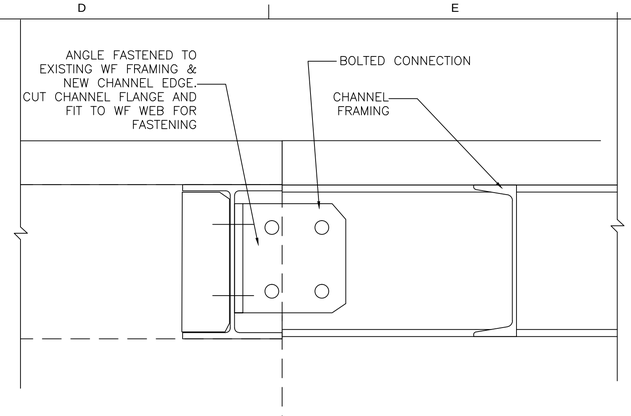

1 SB-10 DETAIL- CATWALK TO EXT'G. CATWALK

SCALE: 3"=1'-0"

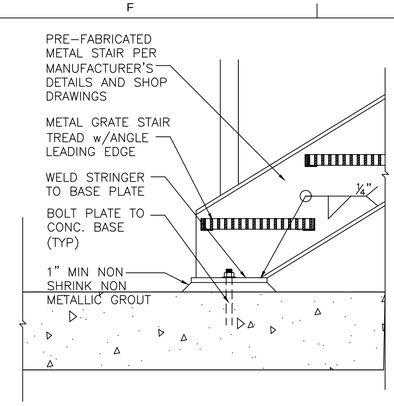

3 SB-09 DETAIL-TYPICAL STAIR BASE PLATE

SCALE: 1 1/2"=1'-0"

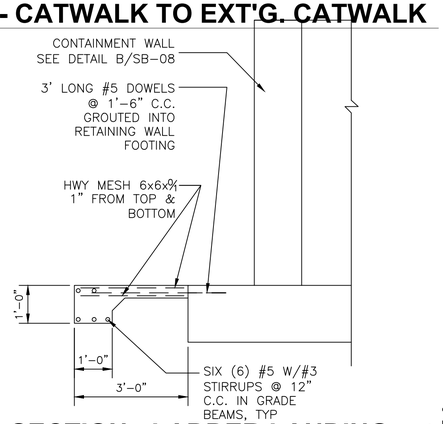

B SB-02 SECTION- LADDER LANDING

SCALE: 1/2"=1'-0"

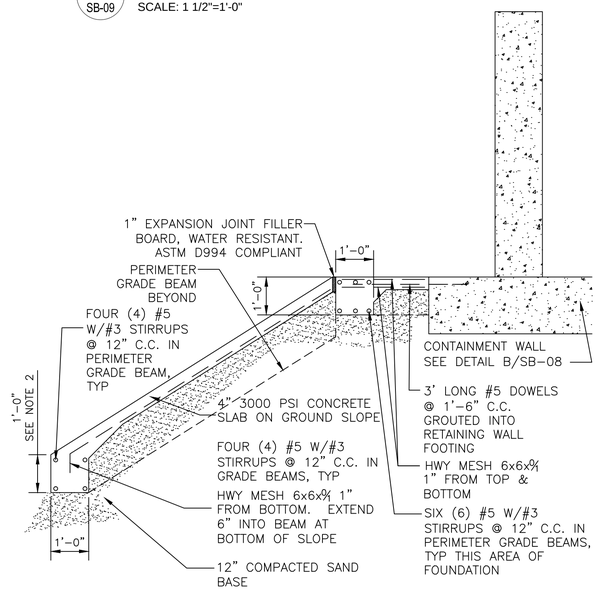

C SB-10 SECTION- SLOPED CONCRETE

SCALE: 1/2"=1'-0"

CL EXISTING W8

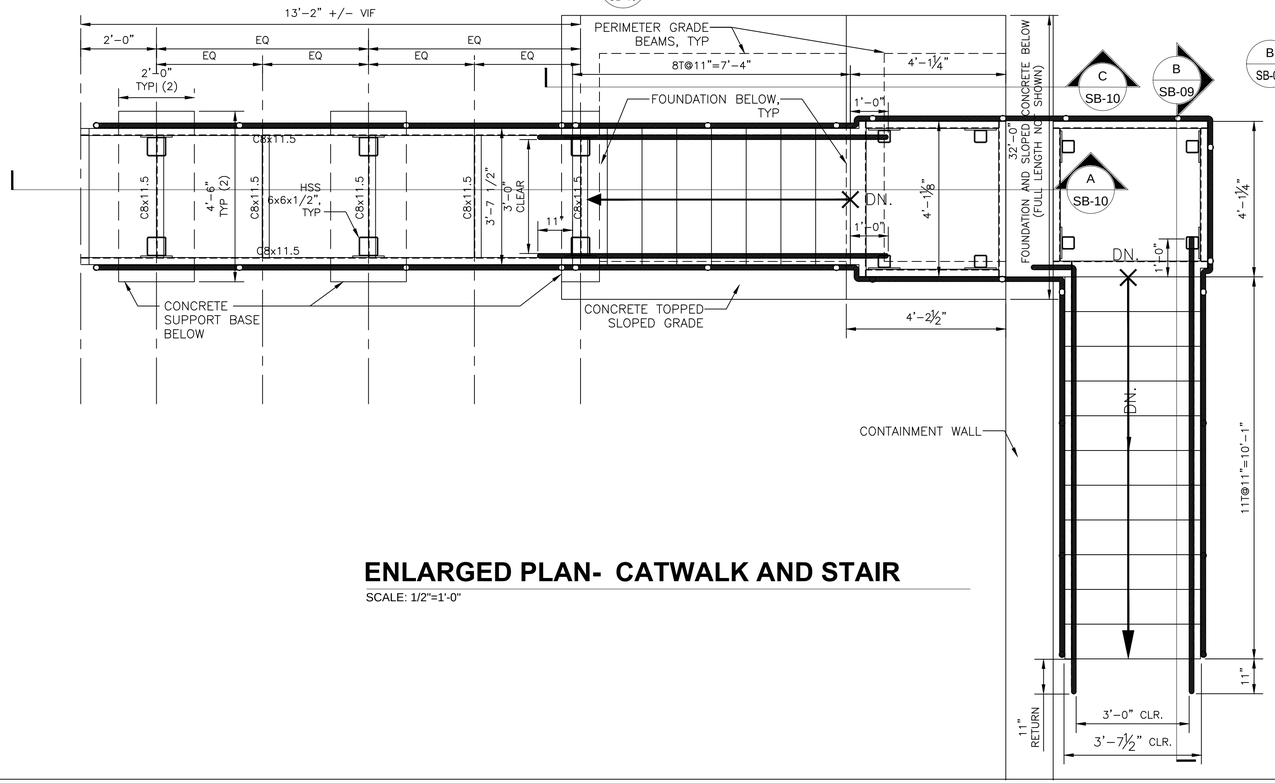

ENLARGED PLAN- CATWALK AND STAIR

SCALE: 1/2"=1'-0"

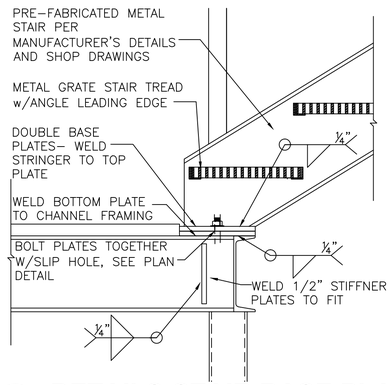

2 SB-10 DETAILS-STAIR BASE PLATE

SCALE: 1 1/2"=1'-0"

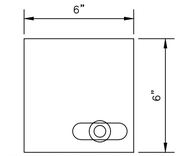

PLAN OF PLATE DRILLED FOR BOLTS TO SLIDE (NOT TO SCALE)

NOTES:

1. SEE SPECIFICATION 05 51 16 INDUSTRIAL METAL STAIRS FOR STAIRS AND HANDRAILS
2. EL 17.31' TOP OF GRADE BEAM, VERIFY IN FIELD TO ENSURE MIN 6" BELOW TOS OF TANK SLAB

REV.	DATE	DESCRIPTION	BY
A	10-25-19	AS-BUILT MARKUPS	LHN

SEWERAGE AND WATER BOARD OF NEW ORLEANS

CONTRACT No. 1369

HMGP EMERGENCY FUEL STORAGE RETROFIT POWER PLANT
MAIN WATER PURIFICATION PLANT POWER COMPLEX

FUEL STORAGE TANK AREA
CATWALK / STAIR/ DETAILS

A SEE SUL-0241 FOR BASELINE AS-BUILTS

THIS DOCUMENT ORIGINALLY ISSUED AND SEALED BY IVAN MANDICH, LICENCE No. 15570 ON 2-6-15. THIS DOCUMENT SHOULD NOT BE CONSIDERED A CERTIFIED DOCUMENT.

Trigon
Quality ▲ Commitment ▲ Client Service

TRIGON DWG. NO. SB-10

TRIGON ASSOCIATES, LLC
1515 POYDRAS STREET
SUITE 2200
NEW ORLEANS, LA 70112
TEL: 504-585-5767
trigonassociates.com

DR:	K MCALLISTER
CK:	I MANDICH
AP:	I MANDICH
LAST EDIT:	
SCALE:	AS NOTED
DATE:	JANUARY 28, 2015

GENERAL SUPERINTENDENT

DWG. No. 12098-W8

SET NO: SHEET NO: 27 OF 72

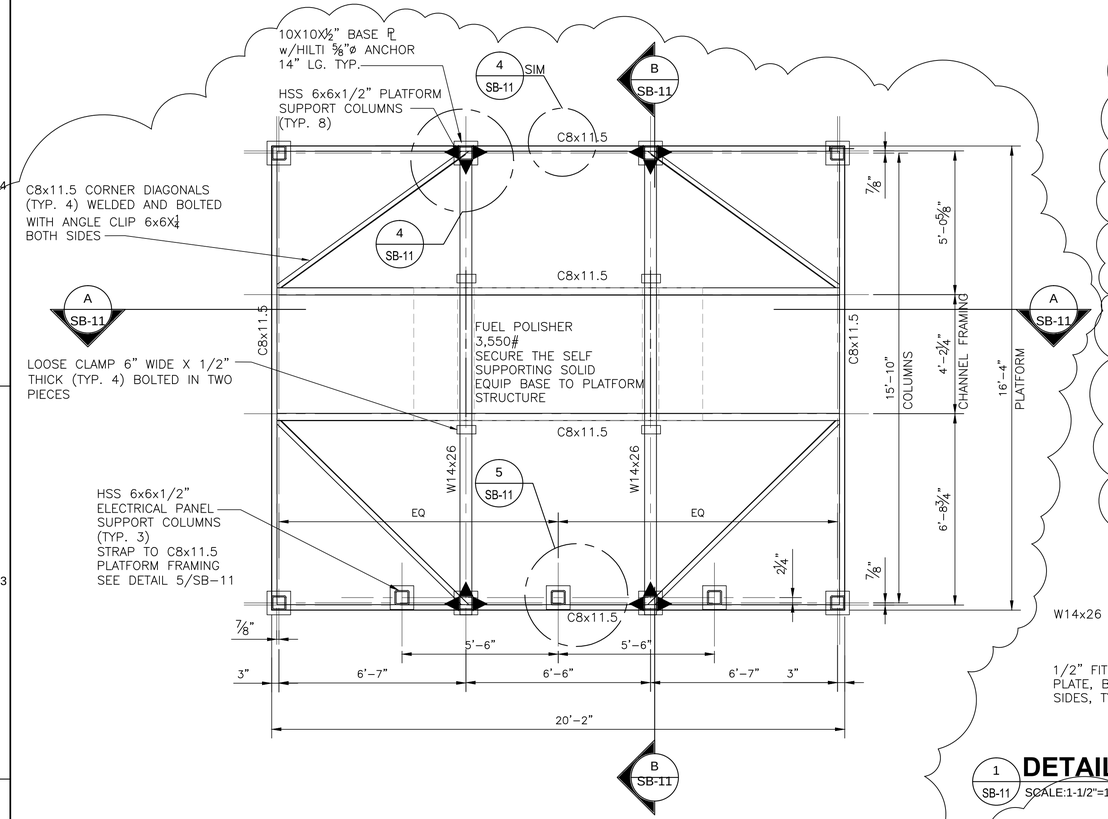

FRAMING PLAN-FUEL POLISHER PLATFORM

SCALE:3/8"=1'-0"

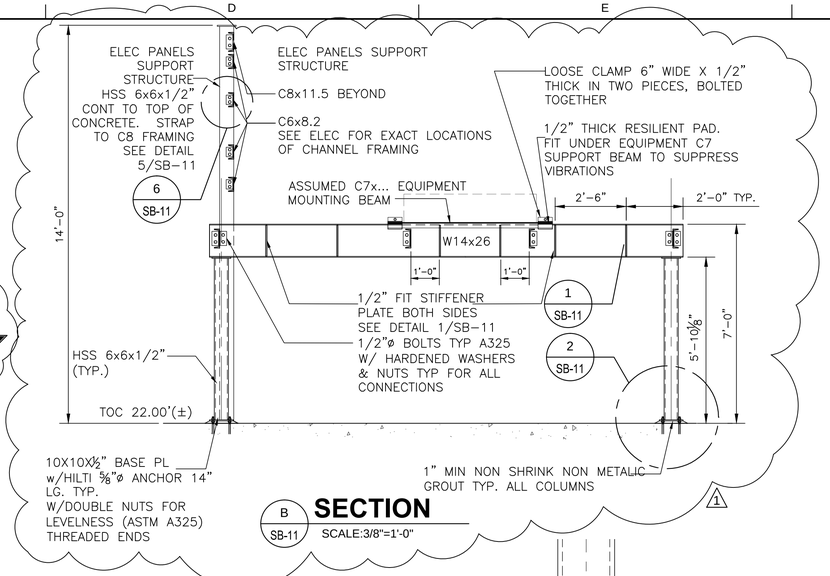

B SB-11 SECTION

SCALE:3/8"=1'-0"

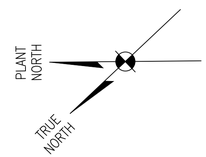

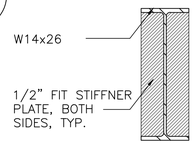

1 SB-11 DETAIL- STIFFNER PLATE

SCALE:1-1/2"=1'-0"

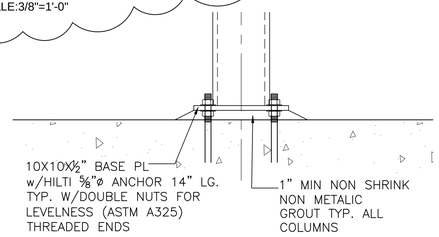

2 SB-11 DETAIL- TYP COLUMN CONNECTION

SCALE:1-1/2"=1'-0"

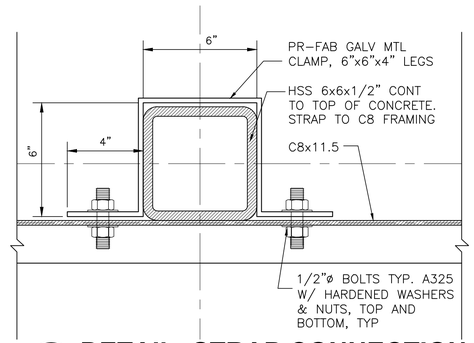

5 SB-11 DETAIL- STRAP CONNECTION

SCALE:3"=1'-0"

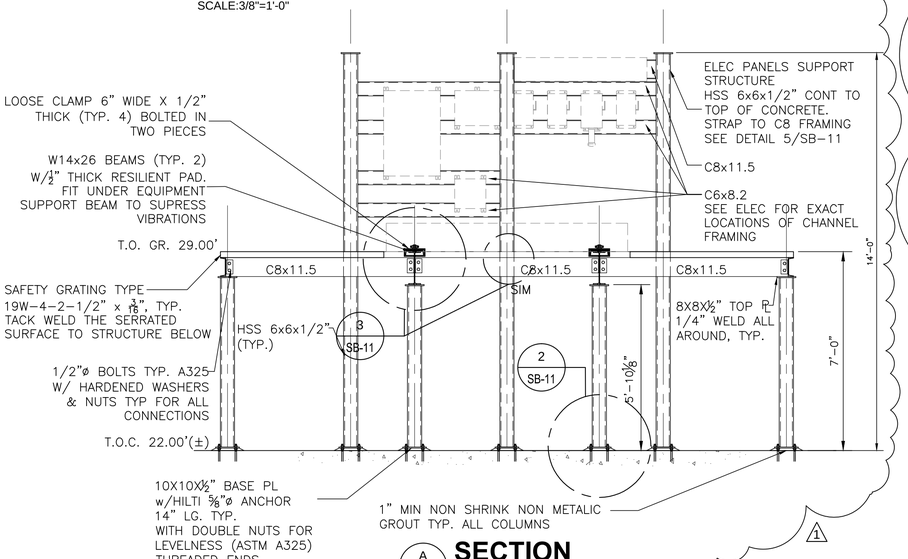

A SB-11 SECTION

SCALE:3/8"=1'-0"

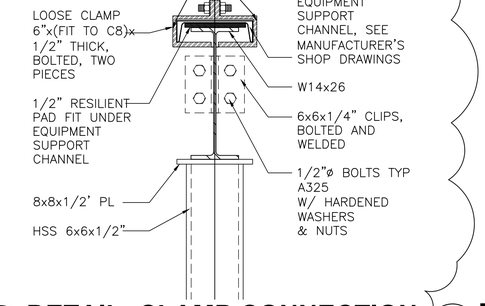

3 SB-11 DETAIL- CLAMP CONNECTION

SCALE:1-1/2"=1'-0"

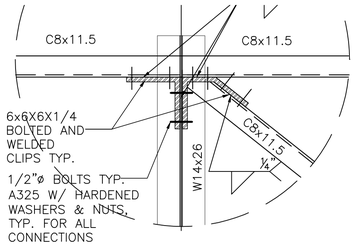

4 SB-11 DETAIL- FRAMING CONNECTIONS

SCALE:1-1/2"=1'-0"

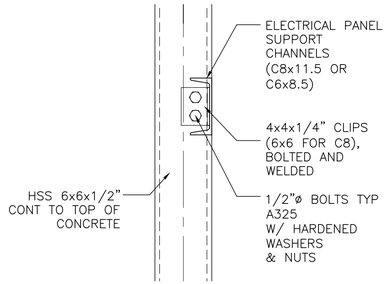

6 SB-11 DETAIL-ELEC PANEL SUPPORT

SCALE:1-1/2"=1'-0"

SEE SUL-0241 FOR BASELINE AS-BUILTS. A
SHEET REVISED PER RESPONSE TO RFI-0116.

REV.	DATE	DESCRIPTION	BY
A	10-25-19	AS-BUILT MARKUPS	LHN
1	12/14/18	RFI 116 EQUIPMENT COORDINATION	KM / IM

SEWERAGE AND WATER BOARD OF NEW ORLEANS

CONTRACT No. 1369

HMGP EMERGENCY FUEL STORAGE RETROFIT POWER PLANT
MAIN WATER PURIFICATION PLANT POWER COMPLEX

FUEL STORAGE TANK AREA
FUEL POLISHER PLATFORM

THIS DOCUMENT ORIGINALLY ISSUED AND SEALED BY IVAN MANDICH, LICENCE No. 15570 ON 2-6-15. THIS DOCUMENT SHOULD NOT BE CONSIDERED A CERTIFIED DOCUMENT.

Trigon
Quality ▲ Commitment ▲ Client Service

TRIGON DWG. NO. SB-11

TRIGON ASSOCIATES, LLC
1515 POYDRAS STREET
SUITE 2200
NEW ORLEANS, LA 70112
TEL: 504-585-5767
trigonassociates.com

DR:	K MCALLISTER
CK:	I MANDICH
AP:	I MANDICH
LAST EDIT:	
SCALE:	AS NOTED
DATE:	JANUARY 28, 2015

GENERAL SUPERINTENDENT

DWG. No. 12098-W8

SET NO: SHEET NO: 28 OF 72

TK–003
EMERGENCY FUEL DAY TANK
(15,000 GALLON CAPACITY)

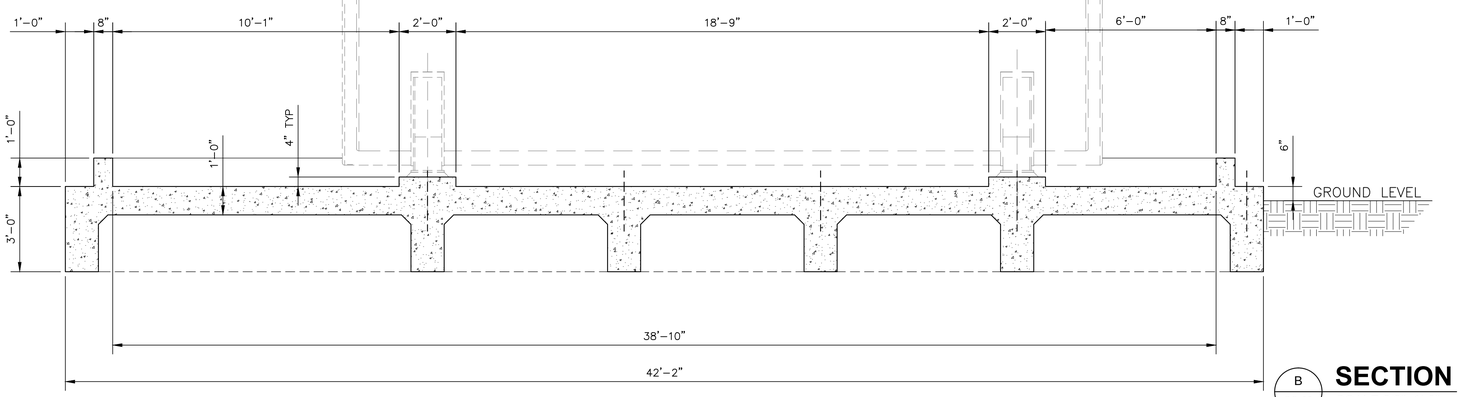

B SC-02 **SECTION**
SCALE:3/8"=1'-0"

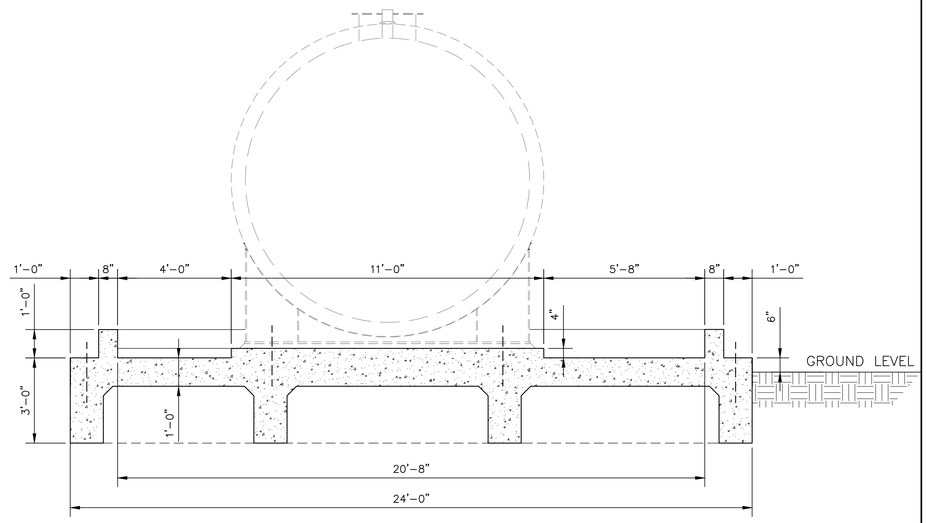

A SC-02 **SECTION**
SCALE:3/8"=1'-0"

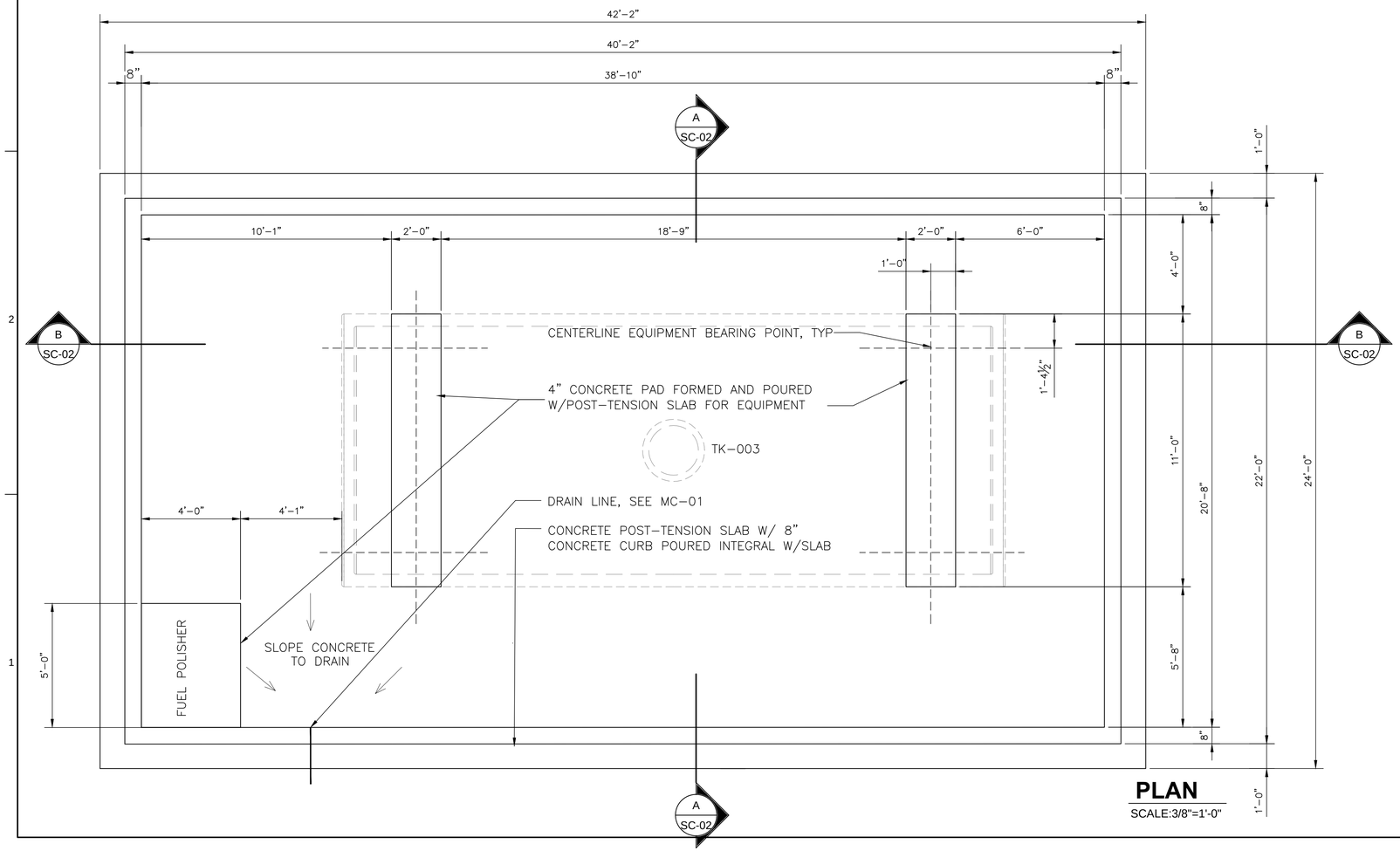

PLAN
SCALE:3/8"=1'-0"

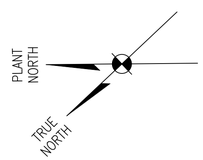

REV.	DATE	DESCRIPTION	BY
A	10–25–19	AS–BUILT MARKUPS	LHN

SEWERAGE AND WATER BOARD
OF NEW ORLEANS

CONTRACT No. 1369

HMGP EMERGENCY FUEL STORAGE
RETROFIT POWER PLANT
MAIN WATER PURIFICATION PLANT POWER COMPLEX

DAY TANK (TK-003)
PLAN AND SECTIONS

A AS–BUILT REVISIONS NOT PROVIDED FOR THIS SHEET BY THE CONTRACTOR.

THIS DOCUMENT ORIGINALLY ISSUED AND SEALED BY IVAN MANDICH, LICENCE No. 15570 ON 2-6-15. THIS DOCUMENT SHOULD NOT BE CONSIDERED A CERTIFIED DOCUMENT.

Trigon
Quality ▲ Commitment ▲ Client Service

TRIGON ASSOCIATES, LLC
1515 POYDRAS STREET
SUITE 2200
NEW ORLEANS, LA 70112
TEL: 504-585-5767

trigonassociates.com

DR.	K MCALLISTER
CK:	I MANDICH
AP:	I MANDICH
LAST EDIT:	
SCALE:	AS NOTED
DATE:	JANUARY 28, 2015

GENERAL SUPERINTENDENT

DWG. No. 12098-W8

TRIGON DWG. NO. SC-02

SET NO: SHEET NO: 29 OF 72

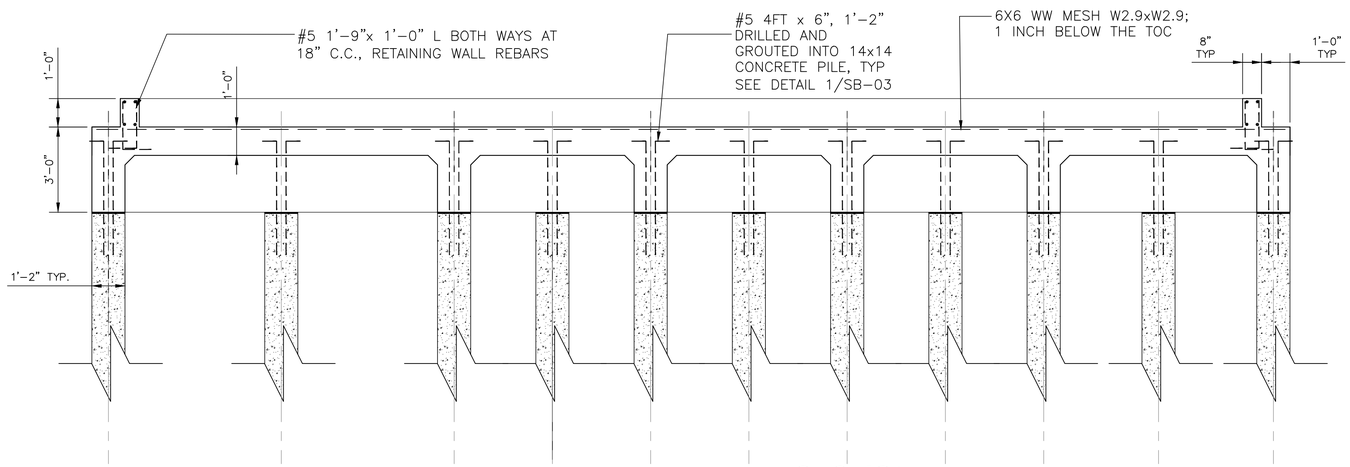

B / SC-03 **SECTION**
SCALE:3/8"=1'-0"

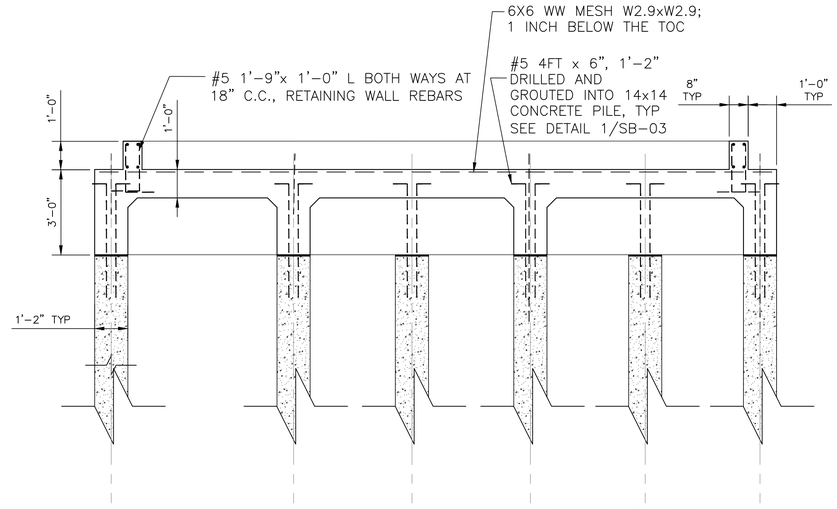

A / SC-03 **SECTION**
SCALE:3/8"=1'-0"

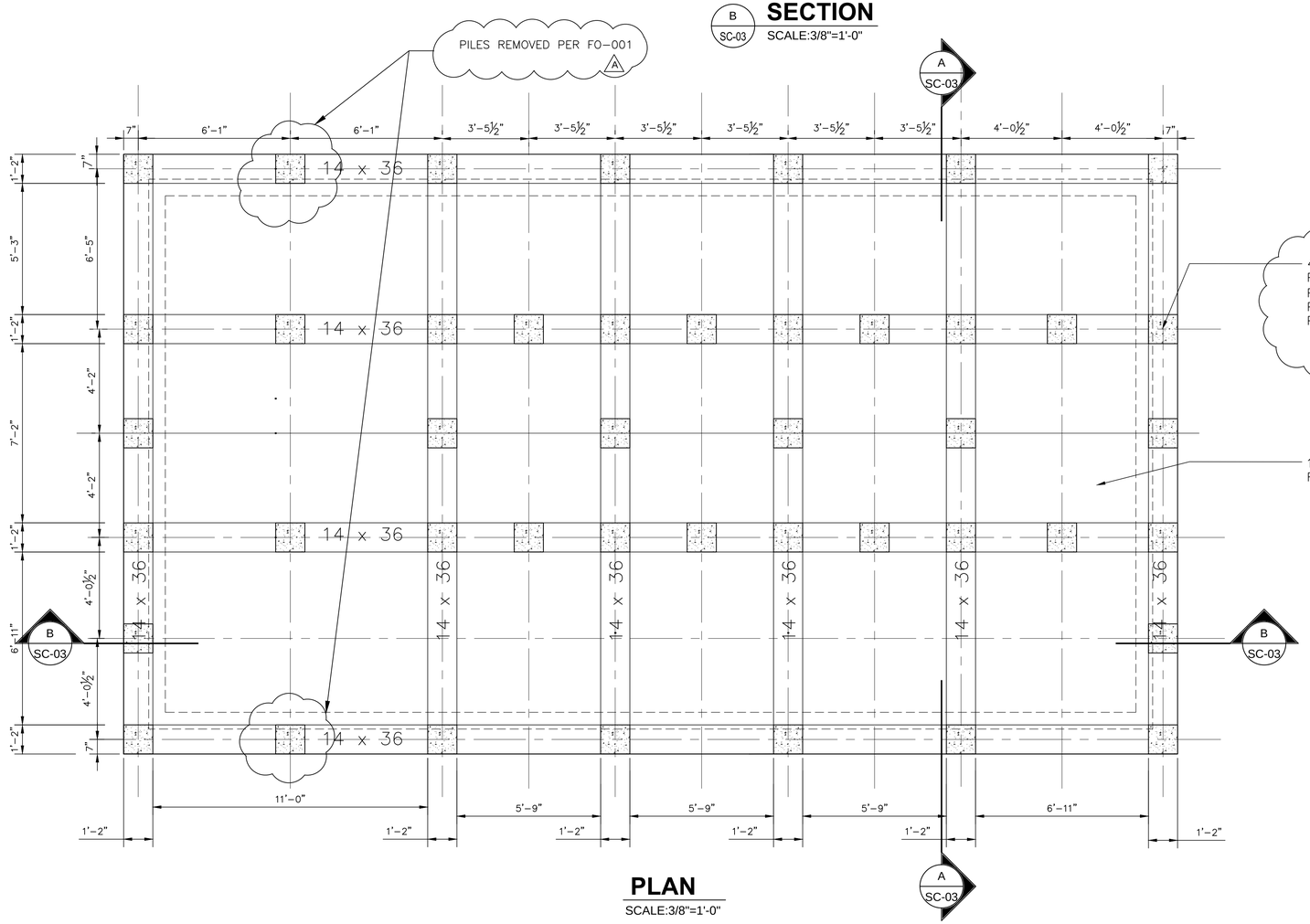

PLAN
SCALE:3/8"=1'-0"

42 EACH, 40 FT. LONG, 25 T PER PILE, SF=2;
PRESTRESSED 14" SQ. TYP. CONC. PILINGS, SEE SPECIFICATIONS FOR PILE DRIVING

A PILE QUANTITY AND LENGTH CHANGED PER FO–001

12" SLAB THICKNESS, SEE REINFORCING PLANPS

PLANT NORTH
TRUE NORTH

NOTES:

1. SEE SPECIFICATION 31 62 13.19 PRECAST CONCRETE PILES FOR PILE DRIVING.
2. A TYP. 14x14 PRE–STRESSED CONCRETE PILES 42 TOTAL, 40' LONG, 25T LOAD CAPACITY, ULTIMATE LOAD CAPACITY 50T/PILE, SF.=2

REV.	DATE	DESCRIPTION	BY
A	10–25–19	AS–BUILT MARKUPS	LHN

SEWERAGE AND WATER BOARD OF NEW ORLEANS

CONTRACT No. 1369

HMGP EMERGENCY FUEL STORAGE
RETROFIT POWER PLANT
MAIN WATER PURIFICATION PLANT POWER COMPLEX

DAY TANK (TK-003) FOUNDATION/ PILE PLAN AND SECTIONS

THIS DOCUMENT ORIGINALLY ISSUED AND SEALED BY IVAN MANDICH, LICENCE No. 15570 ON 2-6-15. THIS DOCUMENT SHOULD NOT BE CONSIDERED A CERTIFIED DOCUMENT.

Trigon
Quality ▲ Commitment ▲ Client Service

TRIGON ASSOCIATES, LLC
1515 POYDRAS STREET
SUITE 2200
NEW ORLEANS, LA 70112
TEL: 504-585-5767

trigonassociates.com

TRIGON DWG. NO.	SC-03
DR:	K MCALLISTER
CK:	I MANDICH
AP:	I MANDICH
LAST EDIT:	
SCALE:	AS NOTED
DATE:	JANUARY 28, 2015
SET NO:	
GENERAL SUPERINTENDENT	
DWG. No.	12098-W8
SHEET NO:	30 OF 72

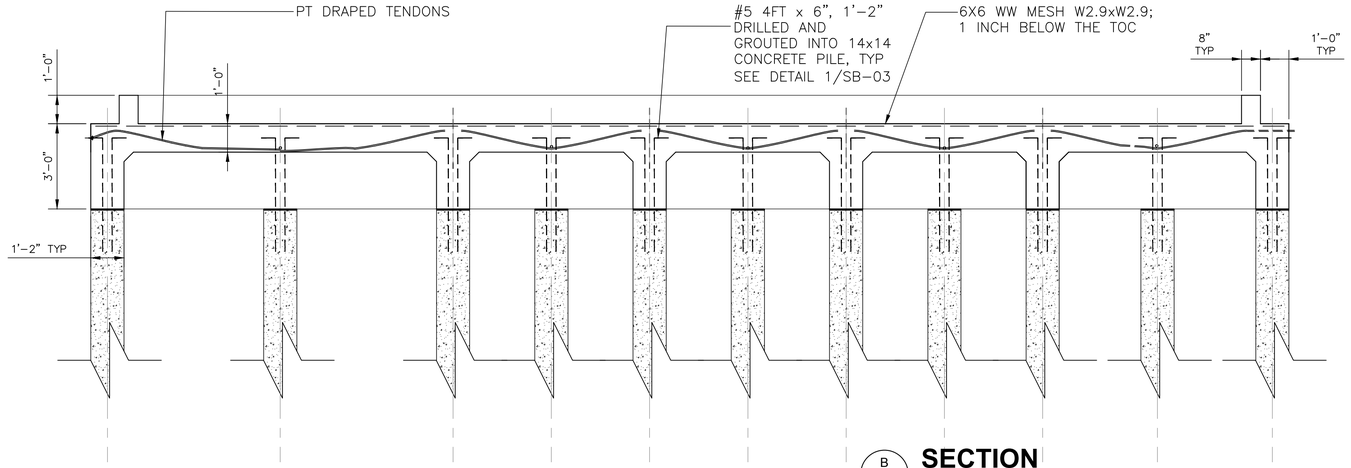

B / SC-04 **SECTION**
SCALE:3/8"=1'-0"

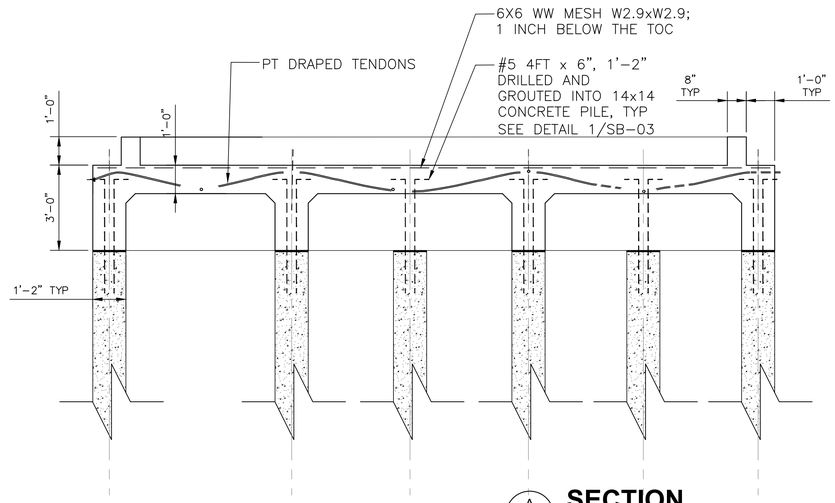

A / SC-04 **SECTION**
SCALE:3/8"=1'-0"

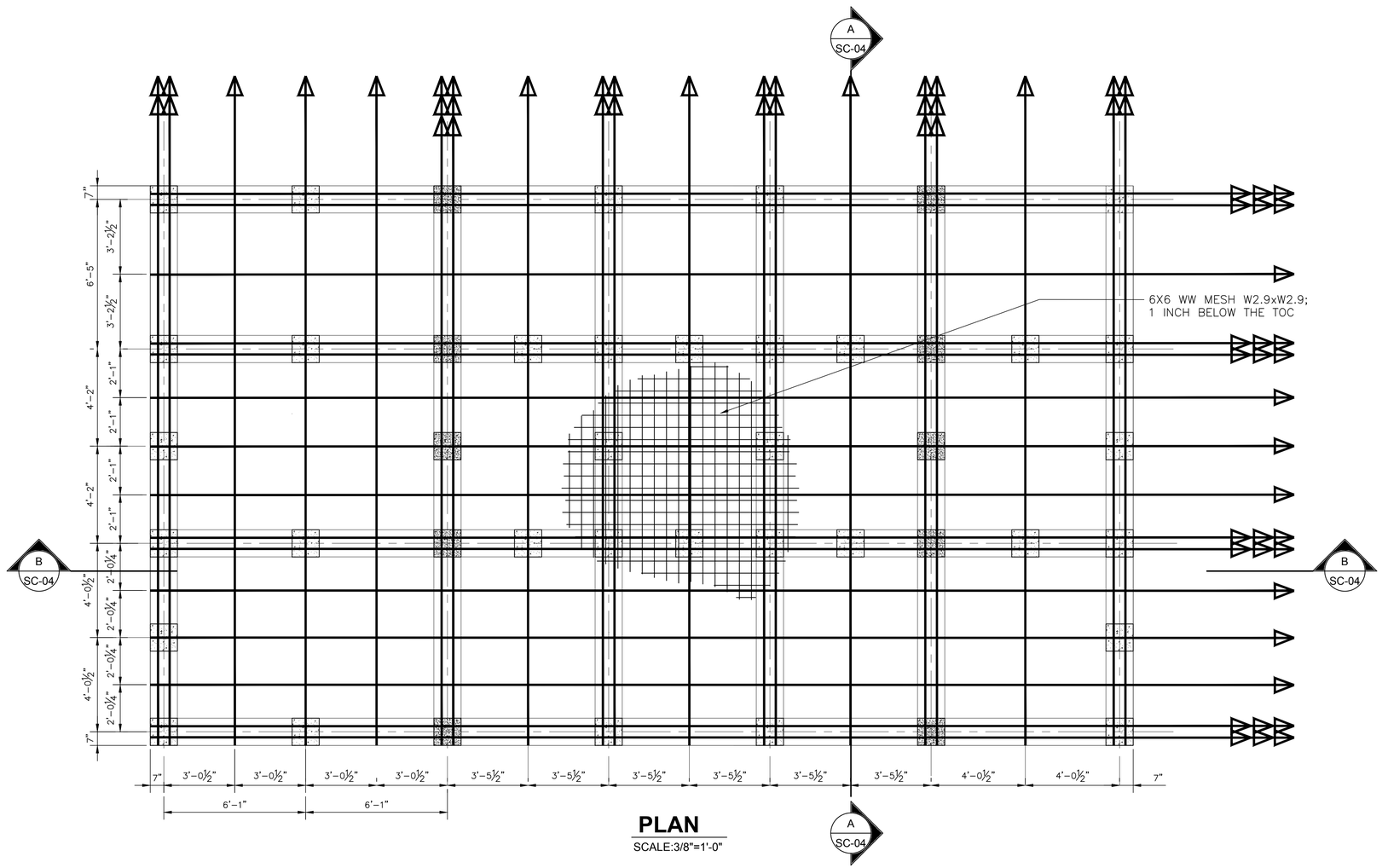

PLAN
SCALE:3/8"=1'-0"

NOTES:

1. SEE SPECIFICATION 03 38 16 POST TENSIONED CONCRETE FOR POST TENSION SLAB
2. CONTRACTOR TO USE CONTINUOUS CABLES, PREPARED FOR THE ENTIRE LENGTH, AND TENSIONED BOTH DIRECTIONS.
3. CONTRACTOR TO USE ANCHORING FROM FACE TO FACE ON THE CONTINUOUS CABLES.
4. MESH 6X6 W2.9xW2.9 WILL BE INSTALLED 1 INCH BELLOW THE TOP OF THE FINISHED SLAB IN THE ENTIRE SLAB AREA.
5. NOTES ON ELONGATION:
   CONTRACTOR WILL INFORM THE ENGINEER OF THE TENSIONING FORCES USED IN OBTAINING THE GIVEN ELONGATION. IF FOUND THAT THE ELONGATION FALLS SHORTER THAN THE PULLING FORCES AS PER CALIBRATED GAUGES, CONTRACTOR WILL PROCEED TO OBTAIN THOSE FORCES. CONTRACTOR TO ACHIEVE THE SPECIFIED ELONGATION. CHECK THE PHYSICAL PROPERTIES OF THE CABLES USED TO MATCH THE MODULUS AND ELONGATION GIVEN.
6. ELONGATION CALCULATIONS SAMPLE:

   PT CONTRACTOR MUST CALCULATE THE ELONGATION AS FOLLOWS:
   LENGTH OF THE CABLE IN FEET TIMES 9.37% AND TENSIONED TO SPECIFICATIONS AND TO THE ALIGNMENT AS SHOWN SEE TYP SECTIONS.

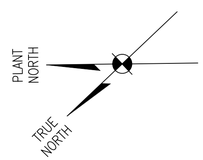

REV.	DATE	DESCRIPTION	BY
A	10-25-19	AS-BUILT MARKUPS	LHN

A THIS SHEET WAS REPLACED ENTIRELY WITH THE VECP DESIGNED BY CARUBBA ENGINEERING, SEE SUL-0159 FOR VECP DESIGN. AS-BUILT DRAWINGS FOR CONTAINMENT PROVIDED BY RLH ARE INCLUDED AS AN APPENDIX TO THIS SET OF AS-BUILT RECORD DRAWINGS.

THIS DOCUMENT ORIGINALLY ISSUED AND SEALED BY IVAN MANDICH, LICENCE No. 15570 ON 2-6-15. THIS DOCUMENT SHOULD NOT BE CONSIDERED A CERTIFIED DOCUMENT.

Trigon
Quality ▲ Commitment ▲ Client Service

TRIGON DWG. NO. SC-04

TRIGON ASSOCIATES, LLC
1515 POYDRAS STREET
SUITE 2200
NEW ORLEANS, LA 70112
TEL: 504-585-5767
trigonassociates.com

SEWERAGE AND WATER BOARD OF NEW ORLEANS

CONTRACT No. 1369

HMGP EMERGENCY FUEL STORAGE
RETROFIT POWER PLANT
MAIN WATER PURIFICATION PLANT POWER COMPLEX

DAY TANK (TK-003)
POST TENSION PLAN AND SECTIONS

DR:	K MCALLISTER
CK:	I MANDICH
AP:	I MANDICH
LAST EDIT:	
SCALE:	AS NOTED
DATE:	JANUARY 28, 2015

GENERAL SUPERINTENDENT

DWG. No. 12098-W8

SET NO: SHEET NO: 31 OF 72

PIPE AND FITTING SYMBOLS

DOUBLE LINE	SINGLE LINE	
		EXISTING PIPE
		NEW PIPE
		EXISTING PIPE TO BE ABANDONED
		EXISTING PIPE TO BE REMOVED
		WELDED JOINT
		GROOVED END JOINT
		FLANGED JOINT
		MECHANICAL JOINT & PROPRIETARY RESTRAINED JOINT
		BELL & SPIGOT JOINT (LEADED)
		HUB & SPIGOT JOINT (RUBBER GASKET)
		BALL JOINT
		ADAPTER SIDE GROOVED END ADAPTER FLANGE
		FLANGED COUPLING ADAPTER
		FLEXIBLE COUPLING
		METAL BELLOWS EXP JOINT
		ELASTOMER BELLOWS EXP JOINT
		ELBOW UP
		ELBOW DOWN
		TEE UP
		TEE DOWN
		LATERAL UP
		LATERAL DOWN
		CONCENTRIC REDUCER
		ECCENTRIC REDUCER
		REDUCING BUSHING
		UNION
		CAP
		ANCHOR
		ELBOW, 90 DEGREE
		CROSS
		TEE
		ELBOW, 45 DEGREE
		LATERAL

FITTING NOTES:

1. ONLY FLANGED END CONNECTIONS ARE SHOWN HERE FOR DOUBLE LINE FITTINGS. FITTINGS WITH OTHER END PATTERNS ARE SHOWN SIMILARLY ON THE CONSTRUCTION DRAWINGS. ALSO SEE PIPING SPECIFICATIONS.
2. SYMBOLS SHOWN HERE FOR SINGLE LINE FITTINGS ARE GENERIC ONLY. REFER TO PIPING SPECIFICATIONS FOR SPECIFIC END CONNECTIONS FOR SINGLE LINE PIPE AND FITTINGS.
3. EXISTING PIPE AND EQUIPMENT IS SHOWN LIGHTER THAN NEW AND IS NOTED AS EXISTING. NEW PIPING AND EQUIPMENT IS SHOWN HEAVY-LINED.

PIPING DESIGNATION

EXAMPLE:

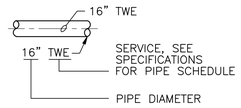

VALVE SYMBOLS

SINGLE LINE	DOUBLE LINE
GATE	
KNIFE GATE	OR
BUTTERFLY	OR
GLOBE	OR
BALL	OR
SEATING PORT ECCENTRIC PLUG	OR
PLUG OR COCK	OR
NEEDLE	OR
DIAPHRAGM	OR
PINCH	OR
SWING CHECK	OR
BALL CHECK	OR
HOSE VALVE (HV- X) OR (V-X) X = NO. IN SPECS	
SAMPLE	
MUD	
PRESSURE RELIEF	
AIR AND/OR VACUUM RELEASE	
REGULATED SIDE PRESSURE CONTROL (INTERNAL PILOT)	
REGULATED SIDE PRESSURE CONTROL (EXTERNAL PILOT)	
MULTI-PORT VALVE, ARROWS INDICATE FLOW PATTERN. SEATING PORTS ARE IMPLIED BY INDICATED FLOW PATTERN.	
TELESCOPING SCUM VALVE	

ACTUATOR SYMBOLS

PNEUMATIC DIAPHRAGM	HYDRAULIC
PNEUMATIC CYLINDER	MANUAL
ELECTRIC MOTOR	SOLENOID
	ELECTRO HYDRAULIC

SELF-CONTAINED REGULATING VALVES

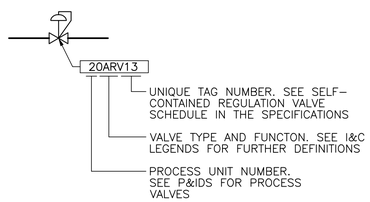

ELEVATION CONVENTION EXAMPLE



NOTE:
SPILLWAY ELEVATION IS 22.06 FT NGVD 29.

VALVE DESIGNATIONS

MANUAL VALVES AND CHECK VALVES

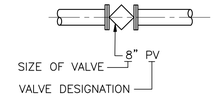

CONTROL VALVES

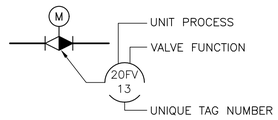

PIPING NOTES:

1. LAY PIPE TO UNIFORM GRADE BETWEEN INDICATED ELEVATION POINTS.
2. SIZE OF FITTINGS SHOWN ON DRAWINGS SHALL CORRESPOND TO ADJACENT STRAIGHT RUN OF PIPE, UNLESS OTHERWISE INDICATED. TYPE OF JOINT AND FITTING MATERIAL SHALL BE THE SAME AS SHOWN FOR ADJACENT STRAIGHT RUN OF PIPE.
3. LOCATION AND NUMBER OF PIPE HANGERS AND PIPE SUPPORTS SHOWN IS APPROXIMATE. CONTRACTOR SHALL DESIGN SUPPORTS AS SPECIFIED.
4. ALL JOINTS SHALL BE WATERTIGHT. WALL PIPES SHALL BE USED WHEREVER PIPING PASSES FROM A STRUCTURE TO BACKFILL.
5. ALL FLEXIBLE CONNECTORS AND COUPLING ADAPTERS SHALL BE PROVIDED WITH THRUST PROTECTION AS SPECIFIED, UNLESS OTHERWISE NOTED. THRUST PROTECTION SHALL BE PROVIDED AT PIPE BENDS AND BE ADEQUATE FOR TEST PRESSURES SPECIFIED.
6. SYMBOLS, LEGENDS, AND PIPE USE IDENTIFICATIONS SHOWN SHALL BE FOLLOWED THROUGHOUT THE DRAWINGS, WHEREVER APPLICABLE. NOT ALL OF THE VARIOUS PIPING COMPONENTS ARE NECESSARILY USED IN THE PROJECT.
7. NUMBER AND LOCATION OF UNIONS SHOWN ON DRAWINGS IS APPROXIMATE. PROVIDE ALL UNIONS NECESSARY TO FACILITATE CONVENIENT REMOVAL OF VALVES AND MECHANICAL EQUIPMENT.
8. WHERE A GROOVED END COUPLING IS SHOWN, IT SHALL BE THE RIGID JOINT TYPE, UNLESS OTHERWISE SPECIFIED. WHERE A FLANGED COUPLING ADAPTER IS SHOWN, A STANDARD FLANGE SHALL BE JOINED TO THE COUPLING ADAPTER.
9. PROVIDE NEEDLE VALVES AT BENDS IN ABOVE GRADE FUEL PIPING.
10. TRANSITIONS FROM ABOVE GRADE TO BELOW GRADE PIPING AND FROM CONTAINMENT SHALL INCLUDE FLEXIBLE COUPLINGS TO ACCOMMODATE DIFFERENTIAL SETTLEMENT.
11. SEE PIPING SPECIFICATIONS FOR PIPE WELDING AND SECTION 05 12 00 FOR PIPE SUPPORT WELDING SYMBOL LEGEND.

REV.	DATE	DESCRIPTION	BY
A	10-25-19	AS-BUILT MARKUPS	LHN

AS-BUILT REVISIONS NOT PROVIDED FOR THIS SHEET BY THE CONTRACTOR.

SEWERAGE AND WATER BOARD OF NEW ORLEANS

CONTRACT No. 1369

HMGP EMERGENCY FUEL STORAGE RETROFIT POWER PLANT
MAIN WATER PURIFICATION PLANT POWER COMPLEX

MECHANICAL SYMBOLOGY AND LEGEND

THIS DOCUMENT ORIGINALLY ISSUED AND SEALED BY LISBETH HABANS NAGRATH, LICENCE No. 36792 ON 2-6-15. THIS DOCUMENT SHOULD NOT BE CONSIDERED A CERTIFIED DOCUMENT.

Trigon
Quality ▲ Commitment ▲ Client Service

TRIGON ASSOCIATES, LLC
1515 POYDRAS STREET
SUITE 2200
NEW ORLEANS, LA 70112
TEL: 504-585-5767

trigonassociates.com

TRIGON DWG. NO. MA-01

DR:	SJ CLARK
CK:	RA CASSANOVA
AP:	LH NAGRATH
LAST EDIT:	
SCALE:	NONE
DATE:	JANUARY 28, 2015

GENERAL SUPERINTENDENT

DWG. No. 12098-W8

SET NO: SHEET NO: 32 OF 72

NOTES:

1. SEE SPECIFICATION SECTION SECTION 01 31 13 PROJECT COORDINATION FOR CONSTRUCTION SEQUENCING.

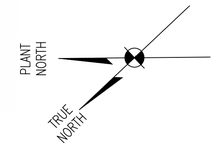

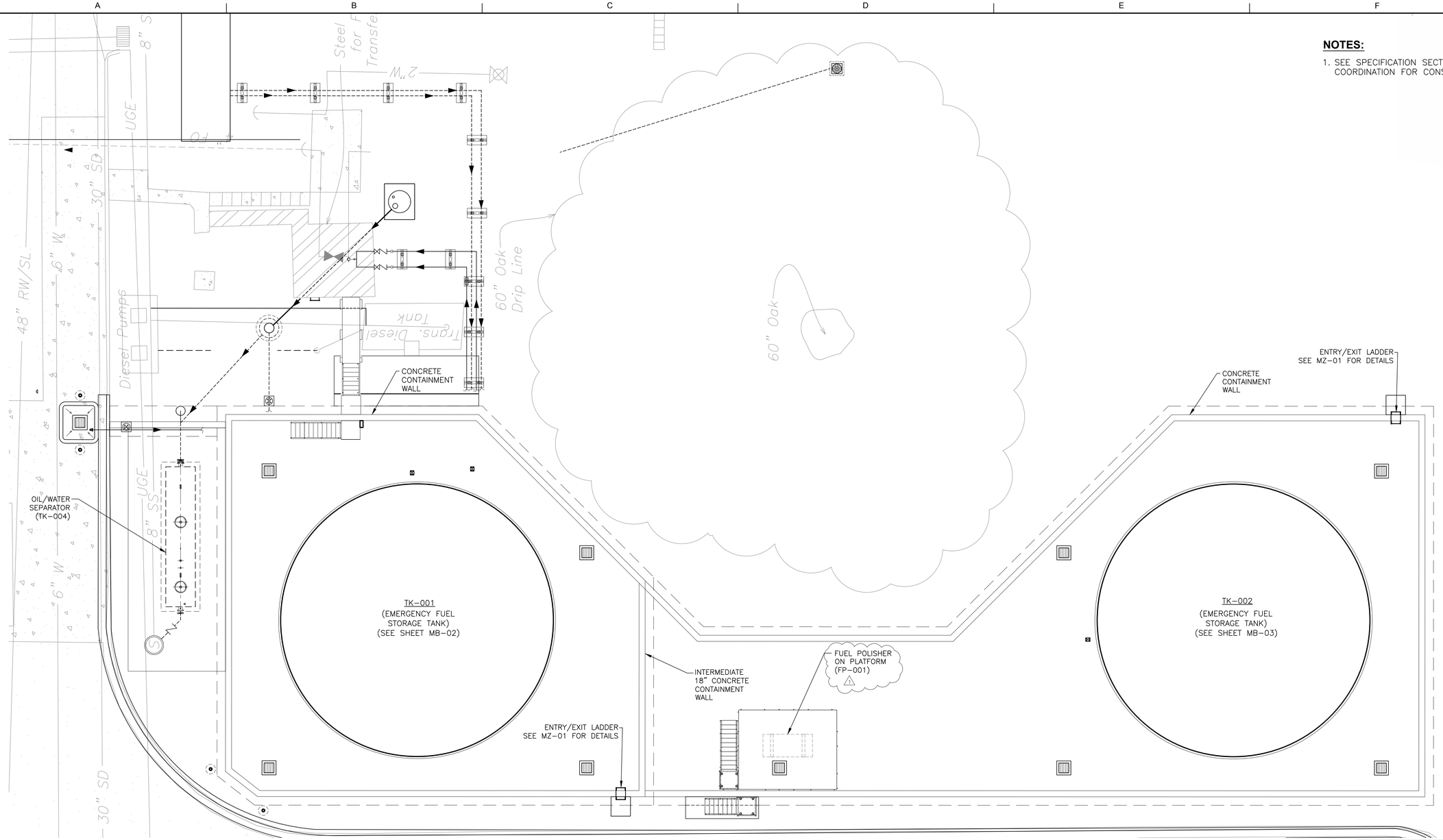

PLAN

SCALE:3/32"=1'-0"

A AS-BUILT REVISIONS NOT PROVIDED FOR THIS SHEET BY THE CONTRACTOR.

REV.	DATE	DESCRIPTION	BY
A	10-25-19	AS-BUILT MARKUPS	LHN
1	3-16-15	REVISED CALL-OUT (ADD.1)	LHN

SEWERAGE AND WATER BOARD OF NEW ORLEANS

CONTRACT No. 1369

HMGP EMERGENCY FUEL STORAGE
RETROFIT POWER PLANT
MAIN WATER PURIFICATION PLANT POWER COMPLEX

FUEL STORAGE TANK CONTAINMENT GENERAL ARRANGEMENT PLAN

THIS DOCUMENT ORIGINALLY ISSUED AND SEALED BY LISBETH HABANS NAGRATH, LICENCE No. 36792 ON 2-6-15. THIS DOCUMENT SHOULD NOT BE CONSIDERED A CERTIFIED DOCUMENT.

Trigon
Quality ▲ Commitment ▲ Client Service

TRIGON ASSOCIATES, LLC
1515 POYDRAS STREET
SUITE 2200
NEW ORLEANS, LA 70112
TEL: 504-585-5767

trigonassociates.com

TRIGON DWG. NO. MB-01

DR.	SJ CLARK
CK:	RA CASSANOVA
AP:	LH NAGRATH
LAST EDIT:	
SCALE:	AS NOTED
DATE:	JANUARY 28, 2015

GENERAL SUPERINTENDENT

DWG. No. 12098-W8

SET NO: SHEET NO. 33 OF 72

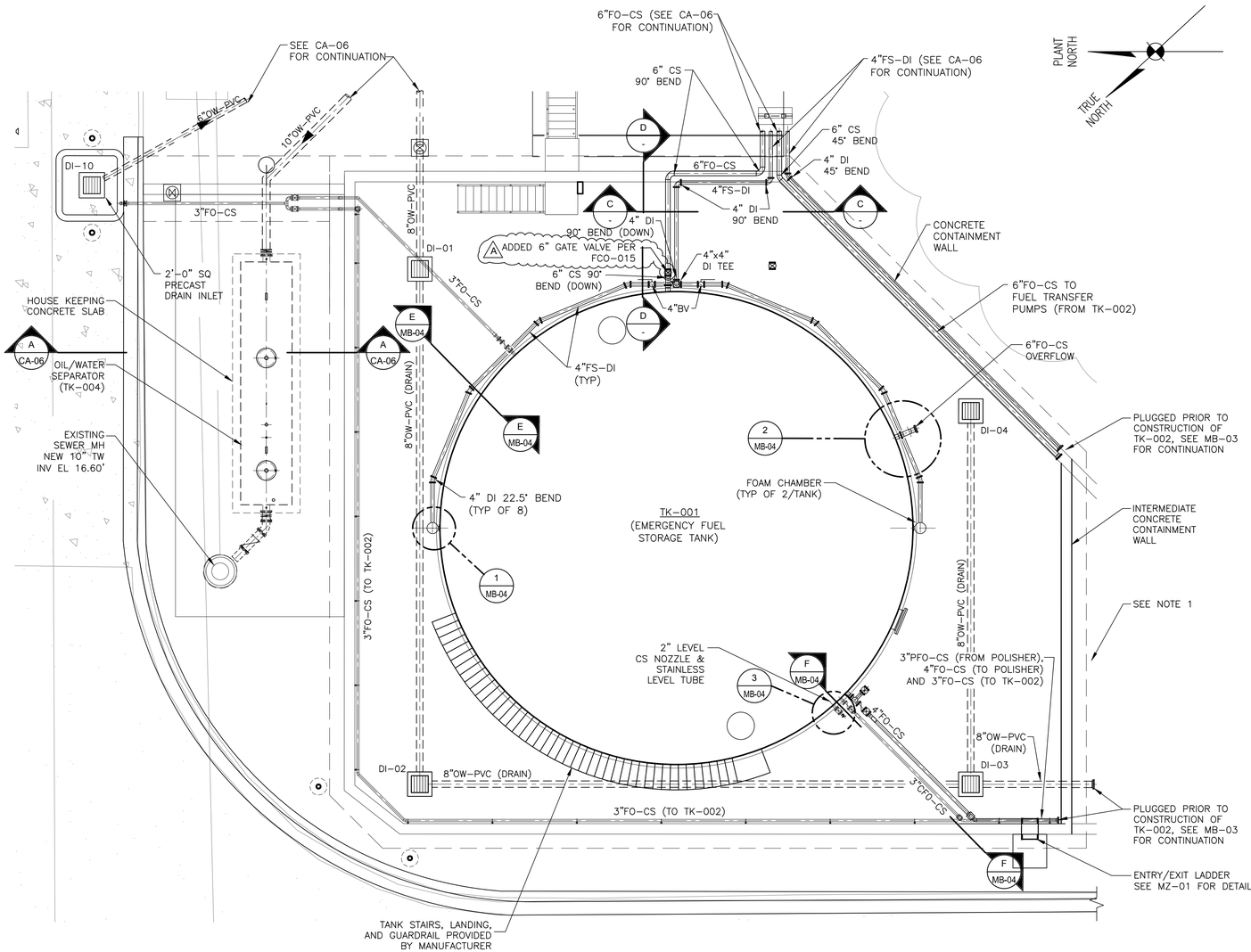

TK-001- PLAN

SCALE: 1/8"=1'-0"

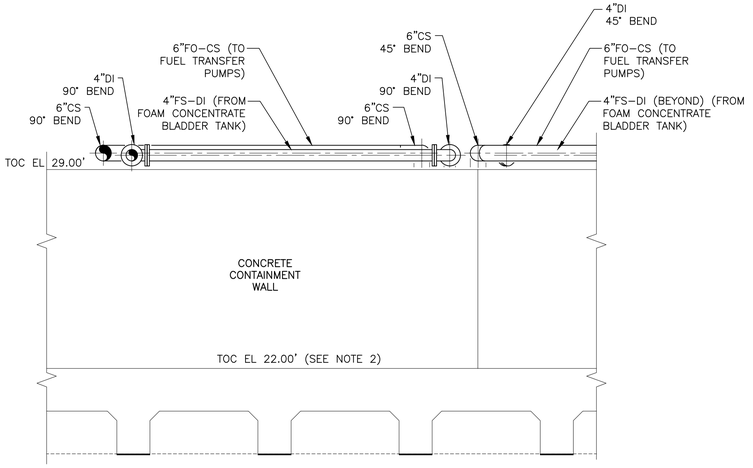

C SECTION

SCALE:3/8"=1'-0"

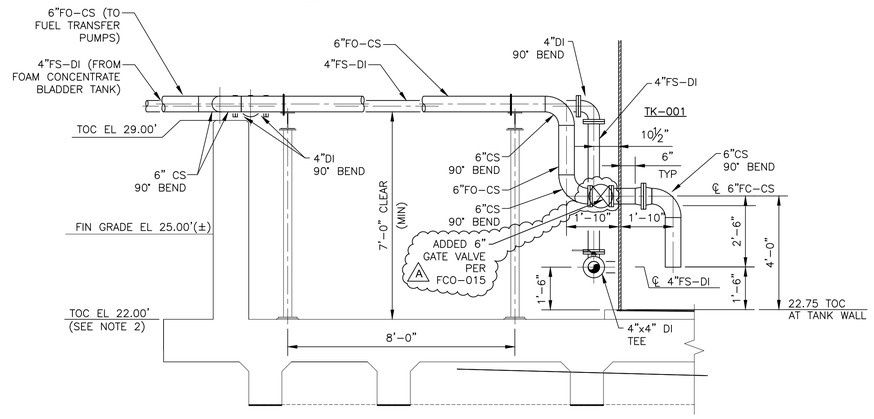

D SECTION

SCALE:3/8"=1'-0"

A SEE SUL-0242 FOR ICFP AS-BUILTS OF FIRE SUPPRESSION SYSTEM PIPING

NOTES:

1. SEE SPECIFICATION SECTION 01 31 13 PROJECT COORDINATION FOR CONSTRUCTION SEQUENCING.
2. THE LOWEST ELEVATION OF THE CONTAINMENT CONCRETE SLAB SHALL BE EL 22.00' AND TOC OF TANK FOUNDATION AT TANK WALL IS 22.75. BOTH ARE REFERENCED AS BASE ELEVATION ON THIS DRAWING. CONTRACTOR TO ADJUST VERTICAL MEASUREMENTS ACCORDING TO CONTAINMENT SLOPING. SEE SHEET SB-01 FOR SLOPING PLAN.
3. PROVIDE NEEDLE VALVES AT BENDS IN FUEL PIPING, NOT SHOWN AT ALL BENDS.

DRAIN INLET	PLANT DIRECTION	INV EL (FT)
DI-01	E	18.47
DI-01	W	18.67
DI-02	E	18.81
DI-02	S	19.01
DI-03	N	19.16
DI-03	S	19.46
DI-03	E	19.46
DI-04	W	19.56
DI-10	S	18.50

SEE MB-03 FOR ADDITIONAL DI LOCATIONS

A OWS PIPING AND DI INVERTS UPDATED PER FCO-014/RFQ-002

REV.	DATE	DESCRIPTION	BY
A	10-25-19	AS-BUILT MARKUPS	LHN

SEWERAGE AND WATER BOARD OF NEW ORLEANS

CONTRACT No. 1369

HMGP EMERGENCY FUEL STORAGE RETROFIT POWER PLANT
MAIN WATER PURIFICATION PLANT POWER COMPLEX

FUEL STORAGE TANK (TK-001) CONTAINMENT PLAN

THIS DOCUMENT ORIGINALLY ISSUED AND SEALED BY LISBETH HABANS NAGRATH, LICENCE No. 36792 ON 2-6-15. THIS DOCUMENT SHOULD NOT BE CONSIDERED A CERTIFIED DOCUMENT.

Trigon
Quality ▲ Commitment ▲ Client Service

TRIGON ASSOCIATES, LLC
1515 POYDRAS STREET
SUITE 2200
NEW ORLEANS, LA 70112
TEL: 504-585-5767

trigonassociates.com

TRIGON DWG. NO. MB-02

DR: SJ CLARK
CK: RA CASSANOVA
AP: LH NAGRATH
LAST EDIT:
SCALE: AS NOTED
DATE: JANUARY 28, 2015

GENERAL SUPERINTENDENT

DWG. No. 12098-W8

SET NO: SHEET NO: 34 OF 72

NOTES:

1. SEE SPECIFICATION SECTION 01 31 13 PROJECT COORDINATION FOR CONSTRUCTION SEQUENCING.
2. THE LOWEST ELEVATION OF THE CONTAINMENT CONCRETE SLAB SHALL BE EL 22.00' AND TOC OF TANK FOUNDATION AT TANK WALL IS 22.75, BOTH ARE REFERENCED AS BASE ELEVATION ON THIS DRAWING. CONTRACTOR TO ADJUST VERTICAL MEASUREMENTS ACCORDING TO CONTAINMENT SLOPING. SEE SHEET SB-01 FOR SLOPING PLAN.
3. PROVIDE NEEDLE VALVES AT BENDS IN FUEL PIPING, NOT SHOWN AT ALL BENDS.

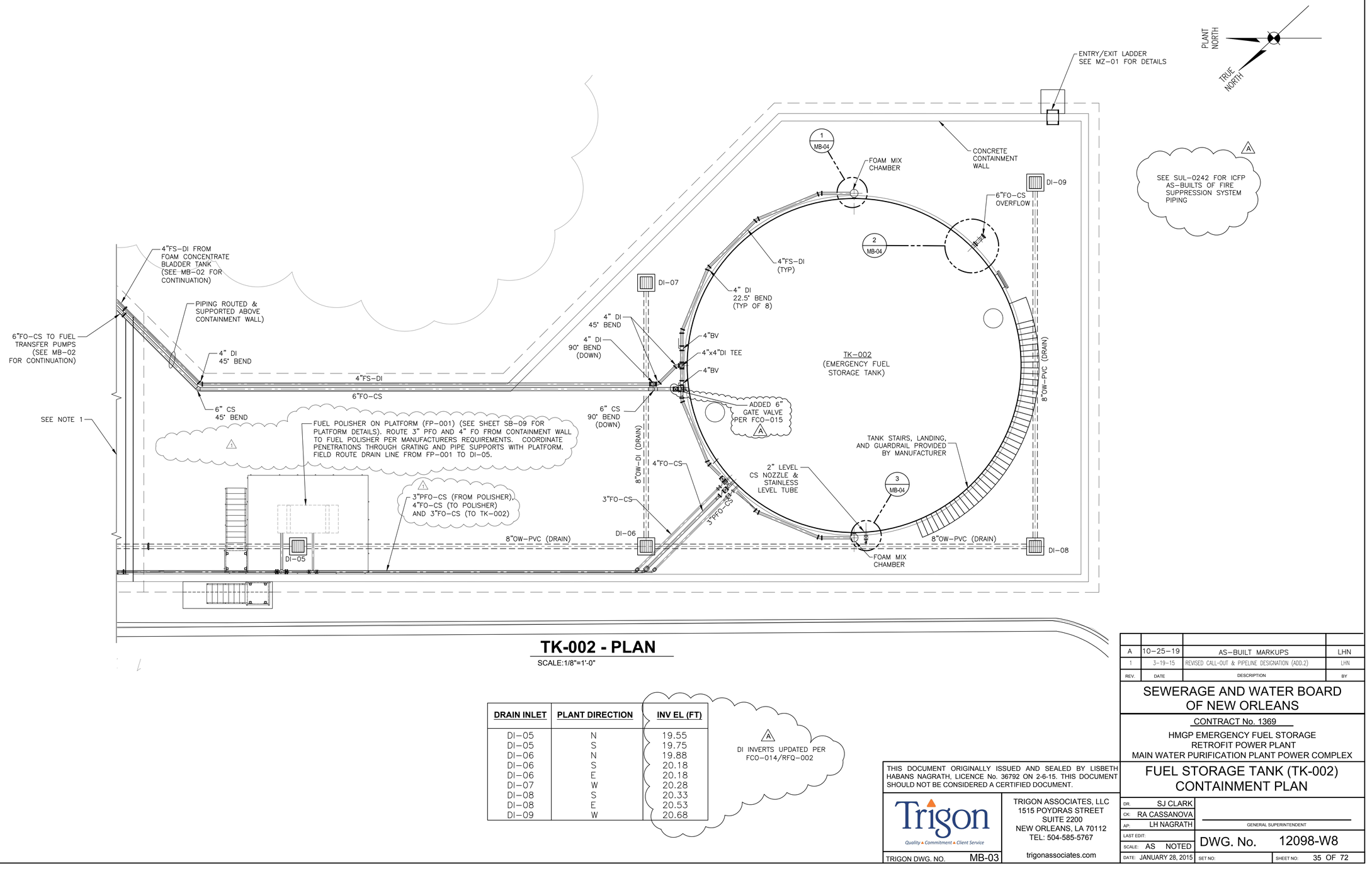

TK-002 - PLAN

SCALE:1/8"=1'-0"

DRAIN INLET	PLANT DIRECTION	INV EL (FT)
DI-05	N	19.55
DI-05	S	19.75
DI-06	N	19.88
DI-06	S	20.18
DI-06	E	20.18
DI-07	W	20.28
DI-08	S	20.33
DI-08	E	20.53
DI-09	W	20.68

A DI INVERTS UPDATED PER FCO-014/RFQ-002

REV.	DATE	DESCRIPTION	BY
A	10-25-19	AS-BUILT MARKUPS	LHN
1	3-19-15	REVISED CALL-OUT & PIPELINE DESIGNATION (ADD.2)	LHN

SEWERAGE AND WATER BOARD OF NEW ORLEANS

CONTRACT No. 1369

HMGP EMERGENCY FUEL STORAGE RETROFIT POWER PLANT
MAIN WATER PURIFICATION PLANT POWER COMPLEX

FUEL STORAGE TANK (TK-002) CONTAINMENT PLAN

THIS DOCUMENT ORIGINALLY ISSUED AND SEALED BY LISBETH HABANS NAGRATH, LICENCE No. 36792 ON 2-6-15. THIS DOCUMENT SHOULD NOT BE CONSIDERED A CERTIFIED DOCUMENT.

Trigon
Quality ▲ Commitment ▲ Client Service

TRIGON ASSOCIATES, LLC
1515 POYDRAS STREET
SUITE 2200
NEW ORLEANS, LA 70112
TEL: 504-585-5767

trigonassociates.com

TRIGON DWG. NO. MB-03

DR:	SJ CLARK
CK:	RA CASSANOVA
AP:	LH NAGRATH
LAST EDIT:	
SCALE:	AS NOTED
DATE:	JANUARY 28, 2015

GENERAL SUPERINTENDENT

DWG. No. 12098-W8

SET NO: SHEET NO: 35 OF 72

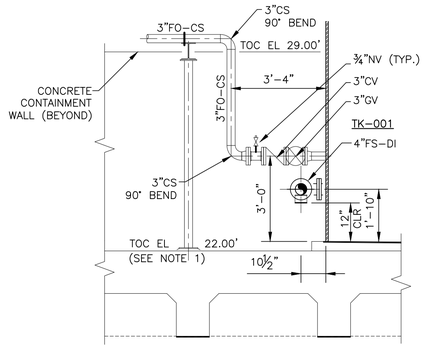

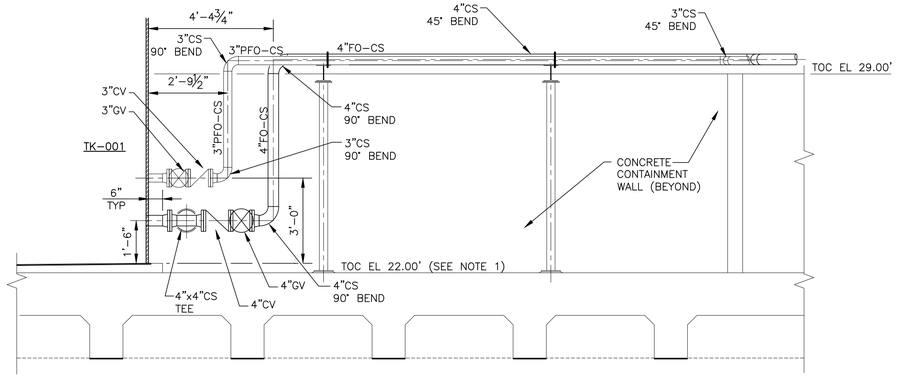

NOTES:

1. THE LOWEST ELEVATION OF THE CONTAINMENT CONCRETE SLAB SHALL BE EL 22.00' AND TOC OF TANK FOUNDATION AT TANK WALL IS 22.75. BOTH ARE REFERENCED AS BASE ELEVATION ON THIS DRAWING. CONTRACTOR TO ADJUST VERTICAL MEASUREMENTS ACCORDING TO CONTAINMENT SLOPING. SEE SHEET SB-01 FOR SLOPING PLAN.
2. PROVIDE NEEDLE VALVES AT BENDS IN FUEL PIPING, NOT SHOWN AT ALL BENDS.

E SECTION
MB-02 SCALE:3/8"=1'-0"

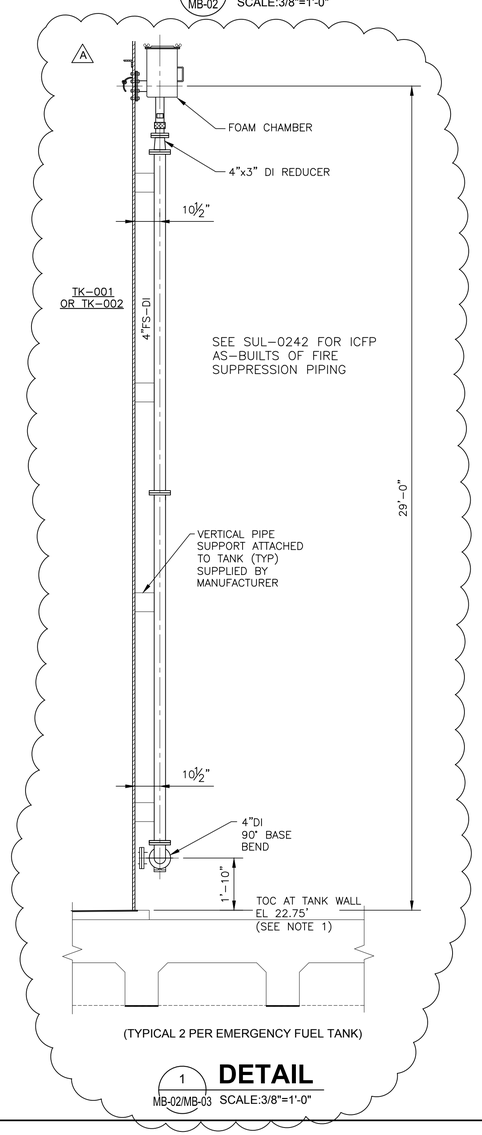

(TYPICAL 2 PER EMERGENCY FUEL TANK)

1 DETAIL
MB-02/MB-03 SCALE:3/8"=1'-0"

F SECTION
MB-02 SCALE:3/8"=1'-0"

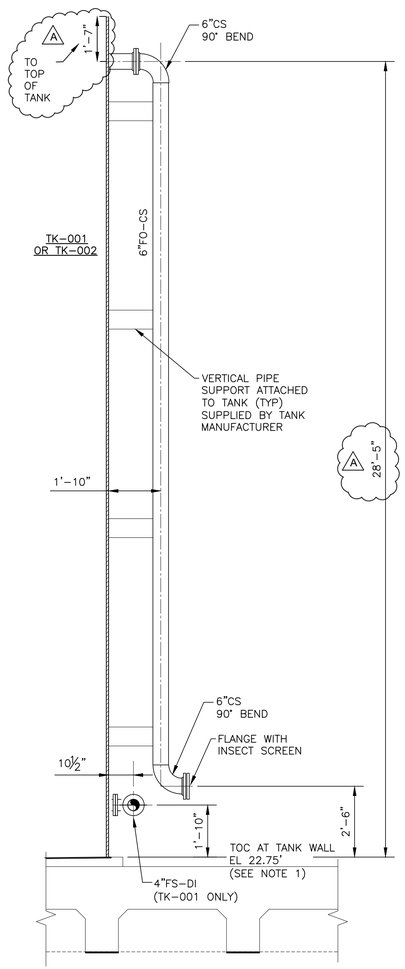

2 DETAIL
MB-02/MB-03 SCALE:3/8=1'-0"

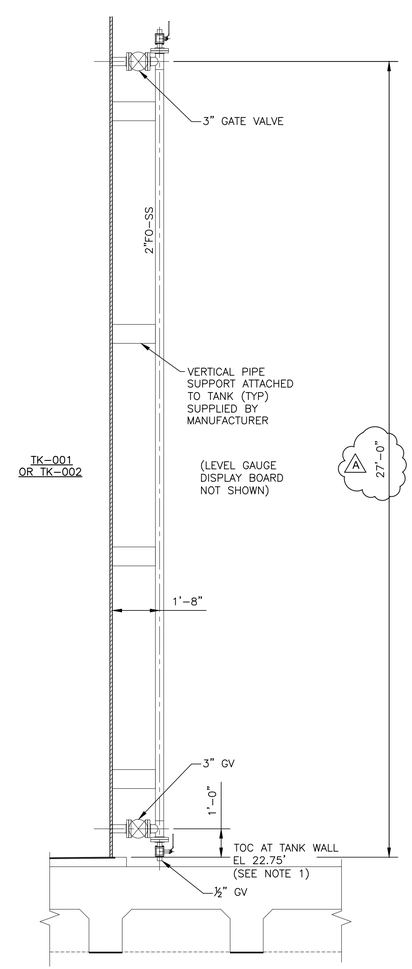

3 DETAIL
MB-02/MB-03 SCALE:3/8=1'-0"

THIS DOCUMENT ORIGINALLY ISSUED AND SEALED BY LISBETH HABANS NAGRATH, LICENCE No. 36792 ON 2-6-15. THIS DOCUMENT SHOULD NOT BE CONSIDERED A CERTIFIED DOCUMENT.

Trigon
Quality ▲ Commitment ▲ Client Service

TRIGON ASSOCIATES, LLC
1515 POYDRAS STREET
SUITE 2200
NEW ORLEANS, LA 70112
TEL: 504-585-5767

trigonassociates.com

TRIGON DWG. NO. MB-04

REV.	DATE	DESCRIPTION	BY
A	10-25-19	AS-BUILT MARKUPS	LHN

SEWERAGE AND WATER BOARD OF NEW ORLEANS

CONTRACT No. 1369

HMGP EMERGENCY FUEL STORAGE
RETROFIT POWER PLANT
MAIN WATER PURIFICATION PLANT POWER COMPLEX

FUEL STORAGE TANK CONTAINMENT SECTIONS AND DETAILS

DR:	SJ CLARK
CK:	GA KOLENOVSKY
AP:	LH NAGRATH
LAST EDIT:	
SCALE:	AS NOTED
DATE:	JANUARY 28, 2015

GENERAL SUPERINTENDENT

DWG. No. 12098-W8

SET NO: SHEET NO: 36 OF 72

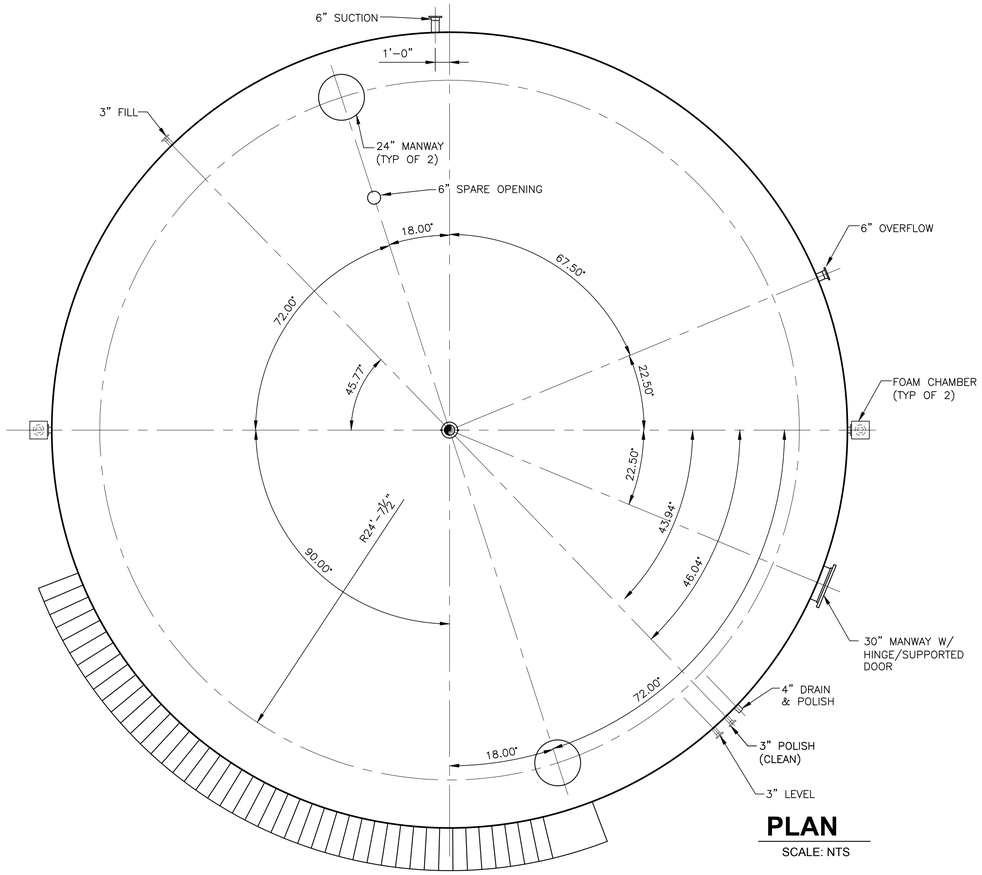

PLAN

SCALE: NTS

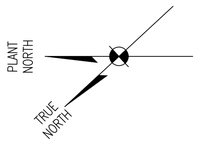

FUEL STORAGE TANK (TK-001) NOTES:

1. FLANGE BOLT HOLES TO STRADDLE NORMAL VESSEL CENTERLINES, UNLESS OTHERWISE NOTED.
2. VESSEL SHALL BE CLEANED INSIDE & OUTSIDE; FREE OF DIRT, GREASE, DEBRIS, WELD SPLATTER, LOOSE MILL SCALE, ETC.
3. ITEMS APPEARING IN ELEVATION VIEW ARE FOR VERTICAL INFORMATION ONLY. SEE PLAN VIEW FOR HORIZONTAL INFORMATION.
4. INTERIOR OF TANK SHALL BE FULLY COATED IN ACCORDANCE WITH THE SPECIFICATIONS.

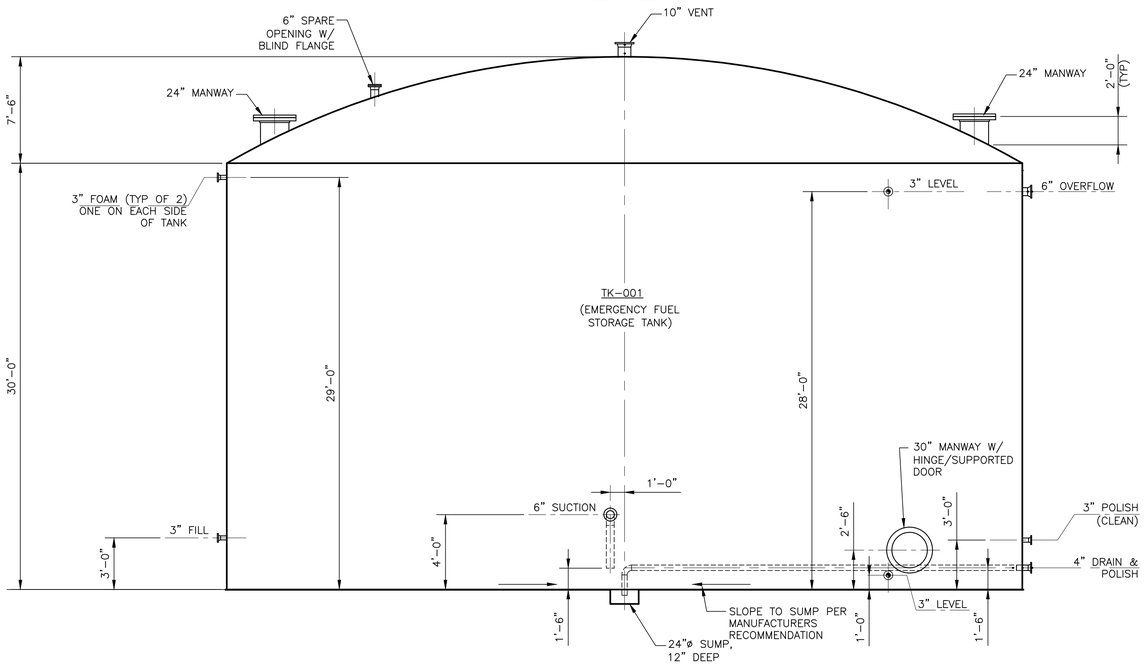

ELEVATION

SCALE: NTS

REV.	DATE	DESCRIPTION	BY
A	10-25-19	AS-BUILT MARKUPS	LHN

SEWERAGE AND WATER BOARD OF NEW ORLEANS

CONTRACT No. 1369

HMGP EMERGENCY FUEL STORAGE
RETROFIT POWER PLANT
MAIN WATER PURIFICATION PLANT POWER COMPLEX

FUEL STORAGE TANK (TK-001)
NOZZLE & DESIGN DATA

A TK-001 AS-BUILT INFORMATION PROVIDED BY JMW IN SUL-0222

THIS DOCUMENT ORIGINALLY ISSUED AND SEALED BY LISBETH HABANS NAGRATH, LICENCE No. 36792 ON 2-6-15. THIS DOCUMENT SHOULD NOT BE CONSIDERED A CERTIFIED DOCUMENT.

Trigon
Quality ▲ Commitment ▲ Client Service

TRIGON ASSOCIATES, LLC
1515 POYDRAS STREET
SUITE 2200
NEW ORLEANS, LA 70112
TEL: 504-585-5767

trigonassociates.com

TRIGON DWG. NO. MB-05

DR.	SJ CLARK
CK:	RA CASSANOVA
AP:	LH NAGRATH
LAST EDIT:	
SCALE:	AS NOTED
DATE:	JANUARY 28, 2015

GENERAL SUPERINTENDENT

DWG. No. 12098-W8

SET NO: SHEET NO: 37 OF 72

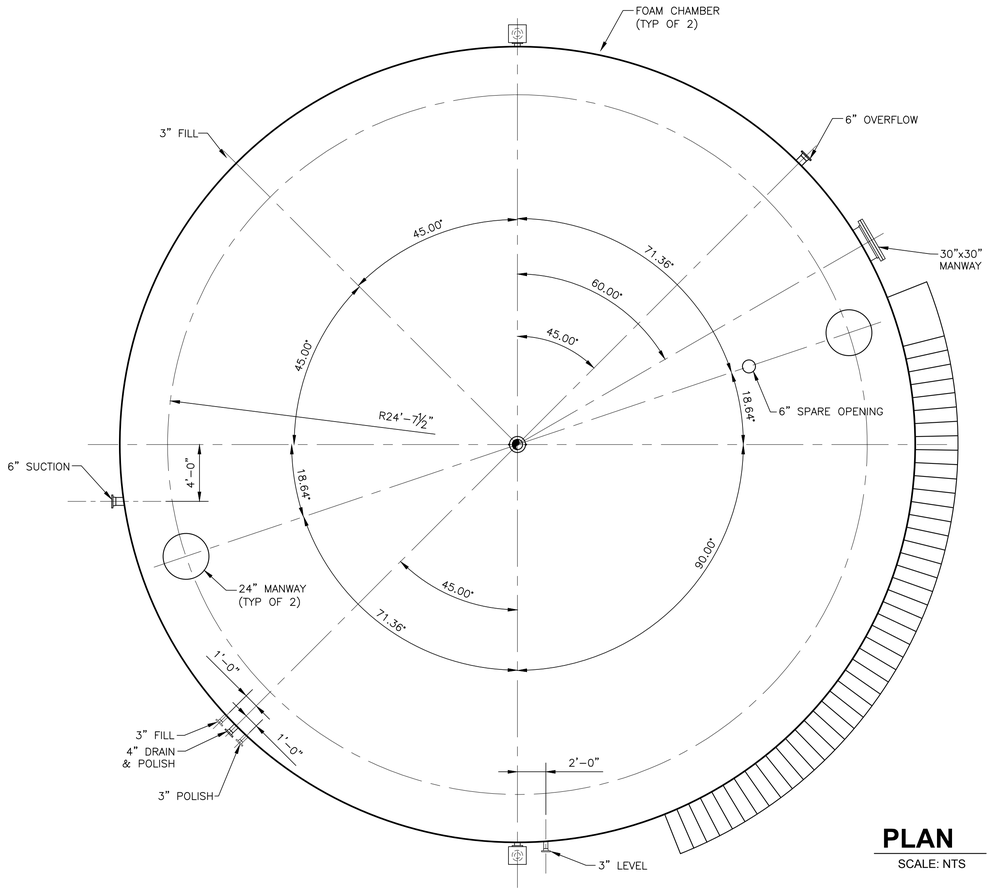

PLAN

SCALE: NTS

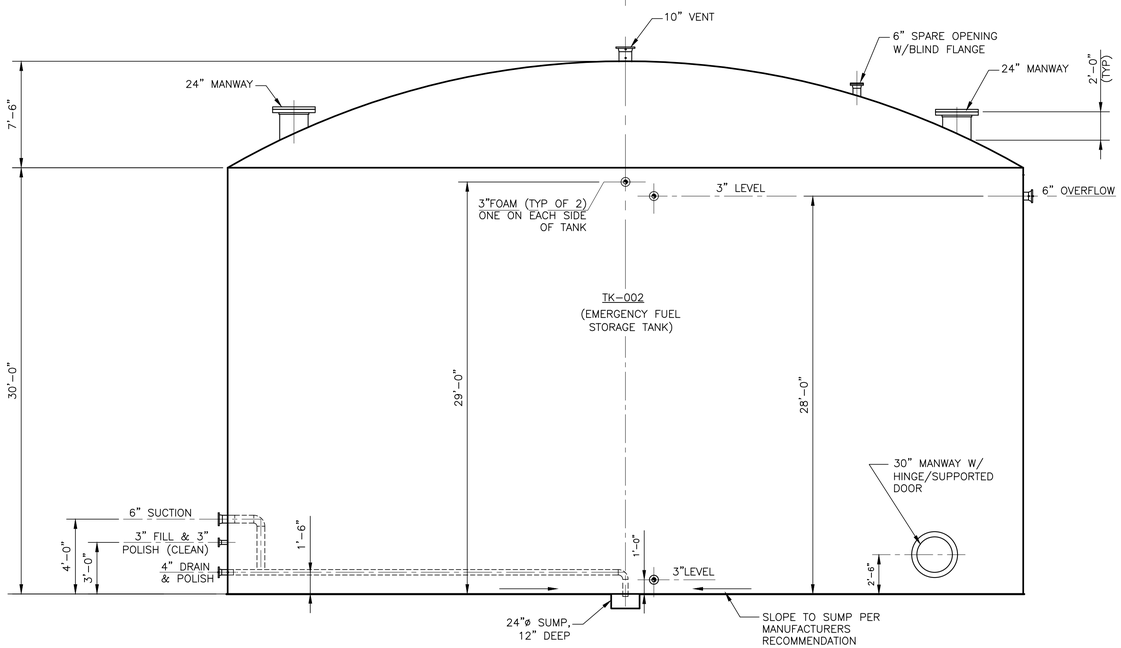

ELEVATION

SCALE: NTS

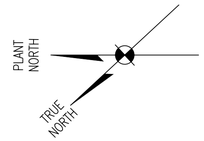

FUEL STORAGE TANK (TK-002) NOTES:

1. FLANGE BOLT HOLES TO STRADDLE NORMAL VESSEL CENTERLINES, UNLESS OTHERWISE NOTED.
2. VESSEL SHALL BE CLEANED INSIDE & OUTSIDE; FREE OF DIRT, GREASE, DEBRIS, WELD SPLATTER, LOOSE MILL SCALE, ETC.
3. ITEMS APPEARING IN ELEVATION VIEW ARE FOR VERTICAL INFORMATION ONLY. SEE PLAN VIEW FOR HORIZONTAL INFORMATION.
4. INTERIOR OF TANK SHALL BE FULLY COATED IN ACCORDANCE WITH THE SPECIFICATIONS.

A TK-002 AS-BUILT INFORMATION PROVIDED BY JMW IN SUL-0237

THIS DOCUMENT ORIGINALLY ISSUED AND SEALED BY LISBETH HABANS NAGRATH, LICENCE No. 36792 ON 2-6-15. THIS DOCUMENT SHOULD NOT BE CONSIDERED A CERTIFIED DOCUMENT.

REV.	DATE	DESCRIPTION	BY
A	10-25-19	AS-BUILT MARKUPS	LHN

SEWERAGE AND WATER BOARD OF NEW ORLEANS

CONTRACT No. 1369

HMGP EMERGENCY FUEL STORAGE
RETROFIT POWER PLANT
MAIN WATER PURIFICATION PLANT POWER COMPLEX

FUEL STORAGE TANK (TK-002)
NOZZLE & DESIGN DATA

Trigon
Quality ▲ Commitment ▲ Client Service

TRIGON ASSOCIATES, LLC
1515 POYDRAS STREET
SUITE 2200
NEW ORLEANS, LA 70112
TEL: 504-585-5767

trigonassociates.com

DR:	SJ CLARK
CK:	RA CASSANOVA
AP:	LH NAGRATH
LAST EDIT:	
SCALE:	AS NOTED
DATE:	JANUARY 28, 2015

GENERAL SUPERINTENDENT

DWG. No. 12098-W8

TRIGON DWG. NO. MB-06

SET NO: 38 OF 72

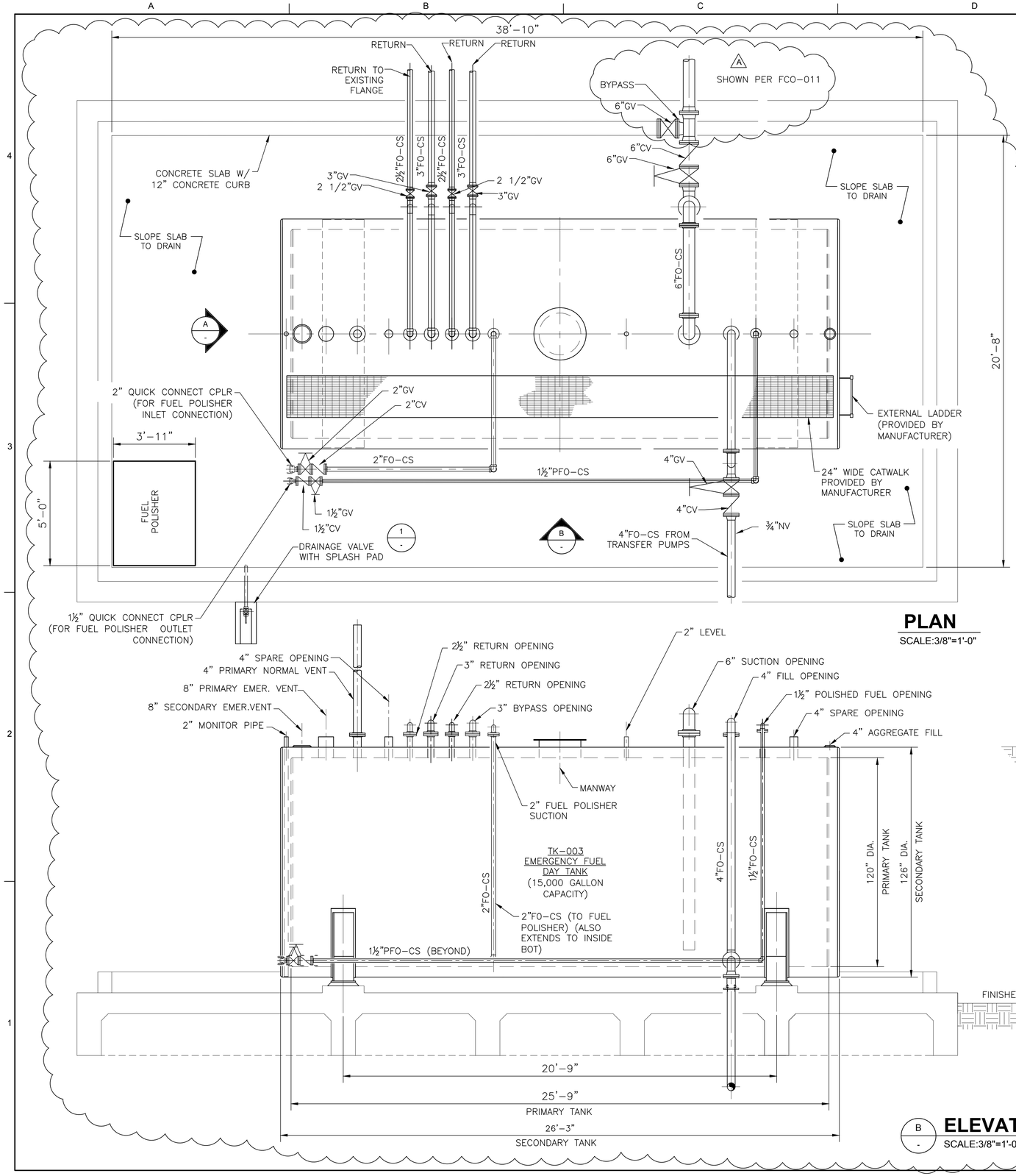

PLAN
SCALE:3/8"=1'-0"

B ELEVATION
SCALE:3/8"=1'-0"

PLANT NORTH
TRUE NORTH

A
PIPING AND NOZZLE MODIFICATIONS PER DAY TANK SUL-0088 AND SUL-0243 HAND SKETCHED DRAWINGS

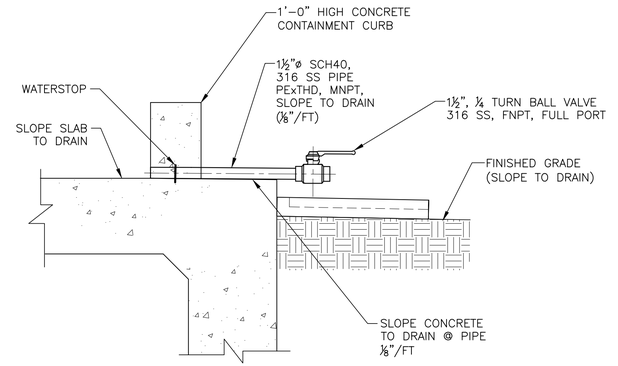

1 - DETAIL
SCALE:1"=1'-0"

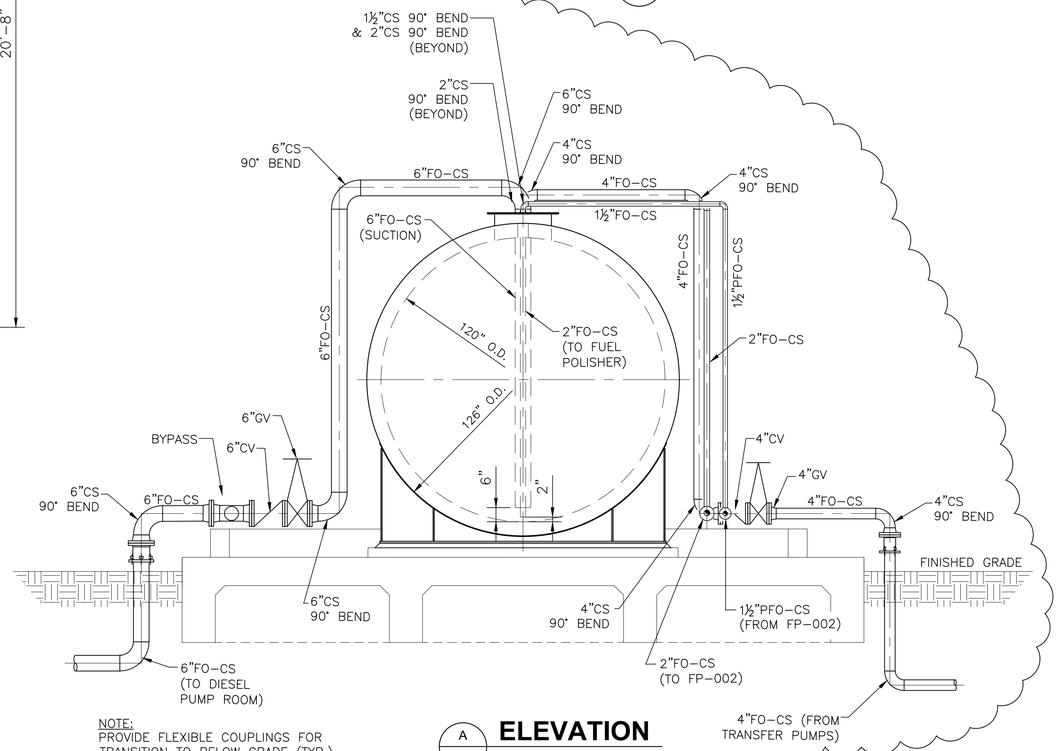

NOTE:
PROVIDE FLEXIBLE COUPLINGS FOR TRANSITION TO BELOW GRADE (TYP.)

A ELEVATION
SCALE:3/8"=1'-0"

REV.	DATE	DESCRIPTION	BY
A	10-25-19	AS-BUILT MARKUPS	LHN

SEWERAGE AND WATER BOARD OF NEW ORLEANS

CONTRACT No. 1369

HMGP EMERGENCY FUEL STORAGE
RETROFIT POWER PLANT
MAIN WATER PURIFICATION PLANT POWER COMPLEX

DAY TANK (TK-003) PLAN, ELEVATION AND SECTION

THIS DOCUMENT ORIGINALLY ISSUED AND SEALED BY LISBETH HABANS NAGRATH, LICENCE No. 36792 ON 2-6-15. THIS DOCUMENT SHOULD NOT BE CONSIDERED A CERTIFIED DOCUMENT.

Trigon
Quality ▲ Commitment ▲ Client Service
TRIGON DWG. NO. MC-01

TRIGON ASSOCIATES, LLC
1515 POYDRAS STREET
SUITE 2200
NEW ORLEANS, LA 70112
TEL: 504-585-5767
trigonassociates.com

DR:	SJ CLARK
CK:	RA CASSANOVA
AP:	LH NAGRATH
LAST EDIT:	
SCALE:	AS NOTED
DATE:	JANUARY 28, 2015

GENERAL SUPERINTENDENT

DWG. No. 12098-W8

SHEET NO: 39 OF 72

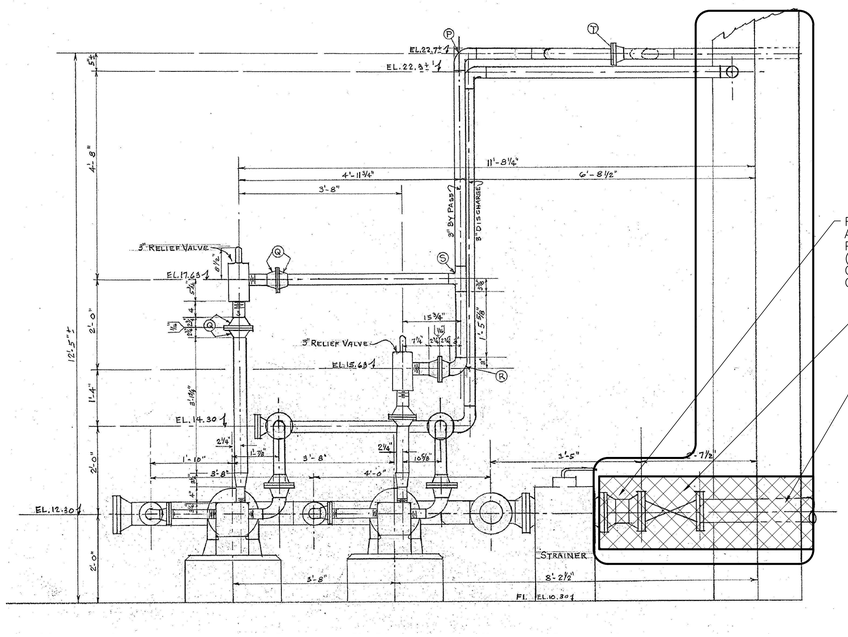

REMOVE EXISTING SPOOL PIECE AND REPLACE WITH NEW SPOOL PIECE WITH WELD NECK FLANGES (8) BOLT HOLE FLANGE FOR CONNECTION TO STRAINER AND CONNECTION TO VALVE.

REMOVE EXISTING 6" PLUG VALVE

REMOVE EXISTING 6" PIPE THRU WALL & PATCH WITH LIKE MATERIALS

REFERENCE SECTION
DIESEL PUMP ROOM (BASEMENT)
SCALE: NTS (SEE NOTE 1)

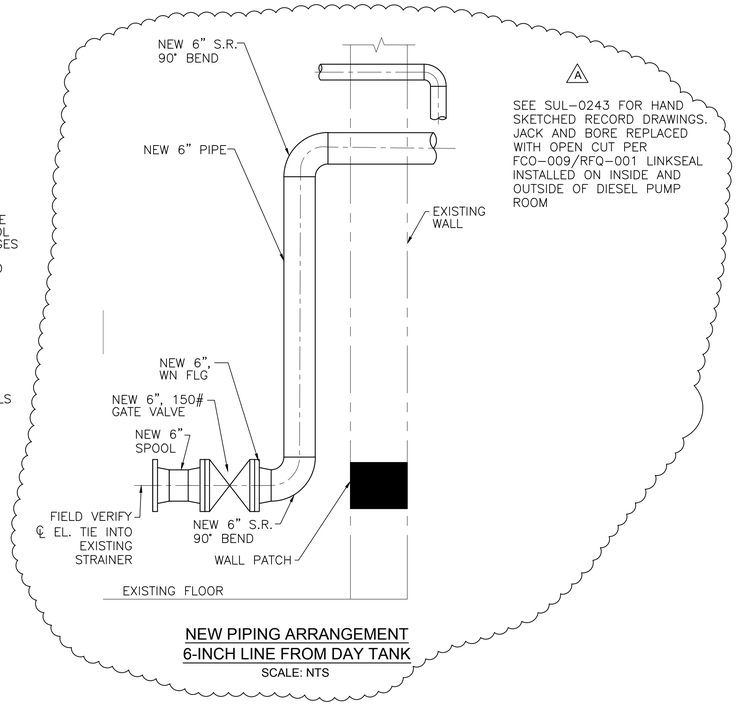

NEW PIPING ARRANGEMENT
6-INCH LINE FROM DAY TANK
SCALE: NTS

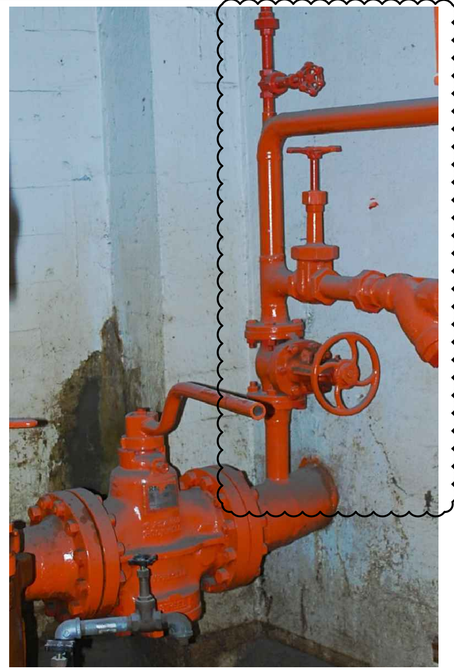

FIELD ROUTE EXISTING PIPING TO NEW 6-INCH PIPE

DIESEL PUMP ROOM (BASEMENT)
SCALE: NTS

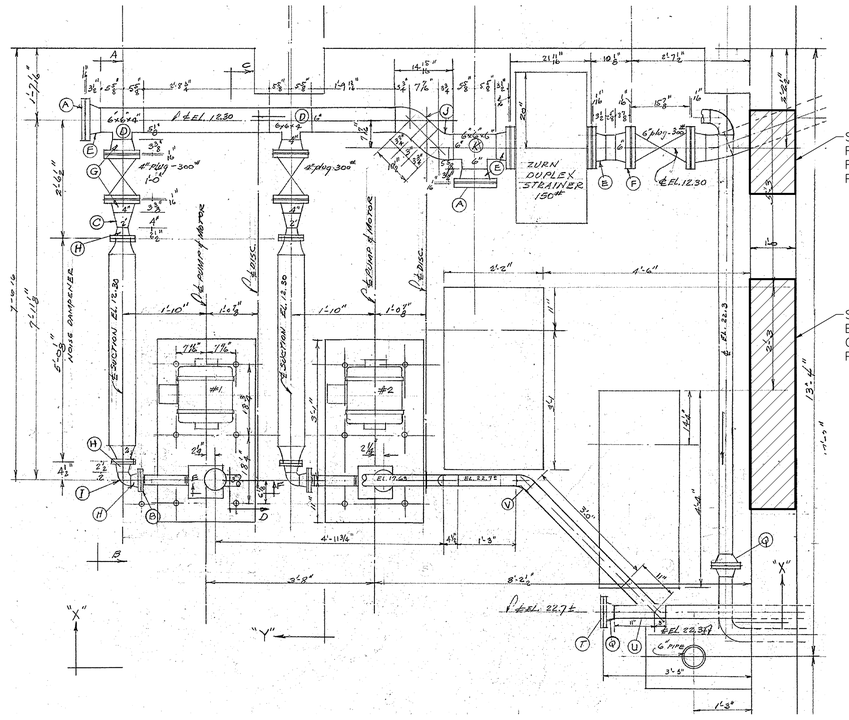

SEE DETAIL 2/SA-02 FOR 6-INCH FO PIPING WALL PENETRATION

SEE DETAIL 1/SA-02 FOR ELECTRICAL AND CONTROLS WALL PENETRATION

REFERENCE PLAN
DIESEL PUMP ROOM (BASEMENT)
SCALE: NTS (SEE NOTE 1)

GENERAL NOTES:

1. THE BACKGROUNDS SHOWN ON THIS DRAWING ARE COPIES OF SWBNO DRAWING NO. 10974-W2, SHEETS 4 OF 5 AND 5 OF 5, DATED 8-23-63 AND 9-5-63. THIS BACKGROUND HAS BEEN INCLUDED FOR REFERENCE ONLY.
2. ELEVATIONS SHOWN ON REFERENCE SECTION DO NOT CORRESPOND TO SURVEY DATUM. FIELD VERIFY PIPING ELEVATIONS.

REV.	DATE	DESCRIPTION	BY
A	10-25-19	AS-BUILT MARKUPS	LHN

SEWERAGE AND WATER BOARD OF NEW ORLEANS

CONTRACT No. 1369

HMGP EMERGENCY FUEL STORAGE
RETROFIT POWER PLANT
MAIN WATER PURIFICATION PLANT POWER COMPLEX

DIESEL PUMP ROOM - PIPE PENETRATIONS/VALVE REPLACEMENT

THIS DOCUMENT ORIGINALLY ISSUED AND SEALED BY LISBETH HABANS NAGRATH, LICENCE No. 36792 ON 2-6-15. THIS DOCUMENT SHOULD NOT BE CONSIDERED A CERTIFIED DOCUMENT.

Trigon
Quality ▲ Commitment ▲ Client Service

TRIGON ASSOCIATES, LLC
1515 POYDRAS STREET
SUITE 2200
NEW ORLEANS, LA 70112
TEL: 504-585-5767

trigonassociates.com

TRIGON DWG. NO. MD-01

DR:	SJ CLARK
CK:	RA CASSANOVA
AP:	LH NAGRATH
LAST EDIT:	
SCALE:	AS NOTED
DATE:	JANUARY 28, 2015

GENERAL SUPERINTENDENT

DWG. No. 12098-W8

SET NO: SHEET NO: 40 OF 72

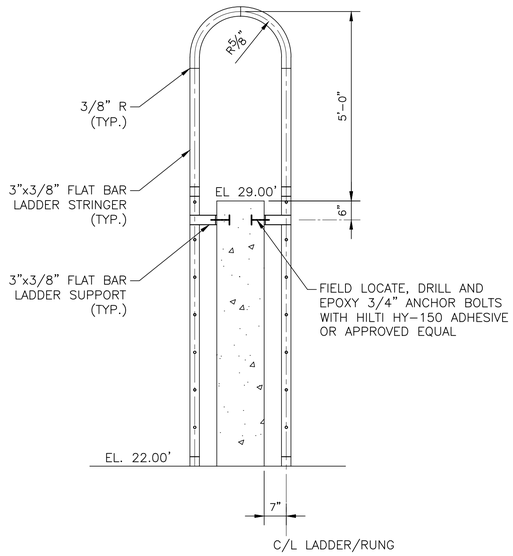

SIDE-VIEW

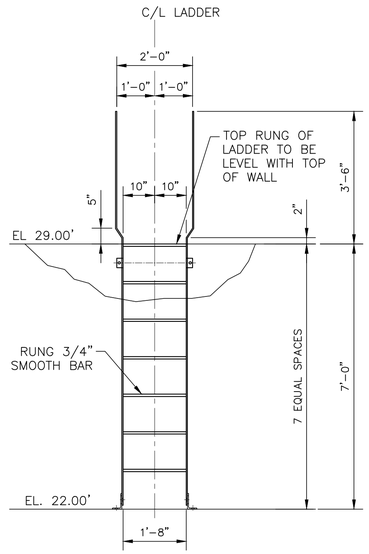

FRONT-VIEW

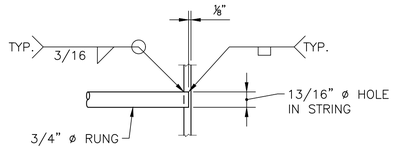

RUNG CONNECTION

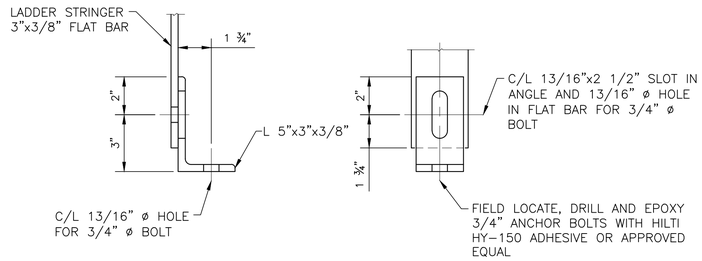

FEET CONNECTION

CONTAINMENT LADDER

1 / - TYPICAL CONTAINMENT LADDER DETAIL

SCALE:1/2"=1'-0"

A AS-BUILT REVISIONS NOT PROVIDED FOR THIS SHEET BY THE CONTRACTOR.

THIS DOCUMENT ORIGINALLY ISSUED AND SEALED BY LISBETH HABANS NAGRATH, LICENCE No. 36792 ON 2-6-15. THIS DOCUMENT SHOULD NOT BE CONSIDERED A CERTIFIED DOCUMENT.

Trigon
Quality ▲ Commitment ▲ Client Service

TRIGON DWG. NO. MZ-01

TRIGON ASSOCIATES, LLC
1515 POYDRAS STREET
SUITE 2200
NEW ORLEANS, LA 70112
TEL: 504-585-5767
trigonassociates.com

REV.	DATE	DESCRIPTION	BY
A	10-25-19	AS-BUILT MARKUPS	LHN

SEWERAGE AND WATER BOARD
OF NEW ORLEANS

CONTRACT No. 1369

HMGP EMERGENCY FUEL STORAGE
RETROFIT POWER PLANT
MAIN WATER PURIFICATION PLANT POWER COMPLEX

MECHANICAL
DETAILS

DR: SJ CLARK
CK: RA CASSANOVA
AP: LH NAGRATH
LAST EDIT:
SCALE: AS NOTED
DATE: JANUARY 28, 2015

GENERAL SUPERINTENDENT

DWG. No. 12098-W8

SET NO: SHEET NO: 41 OF 72

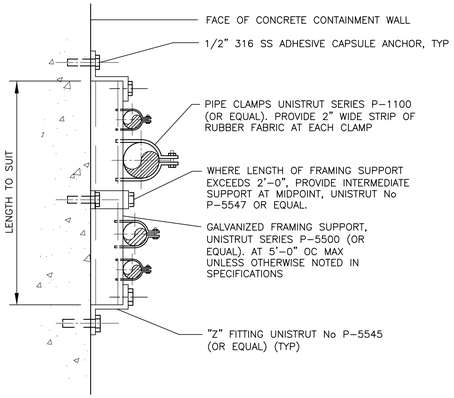

FLUSH MOUNTED PIPE SUPPORT

1 / - **DETAIL**
SCALE: NOT TO SCALE

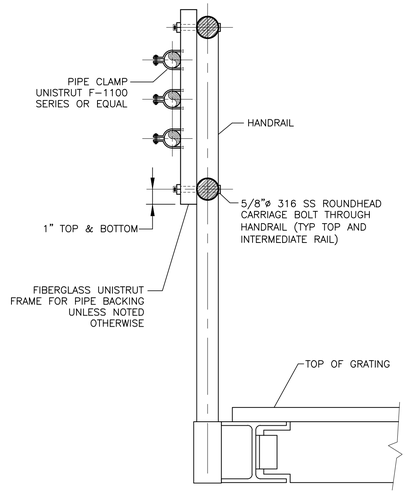

HANDRAIL SUPPORTED PIPE

2 / - **DETAIL**
SCALE: NOT TO SCALE

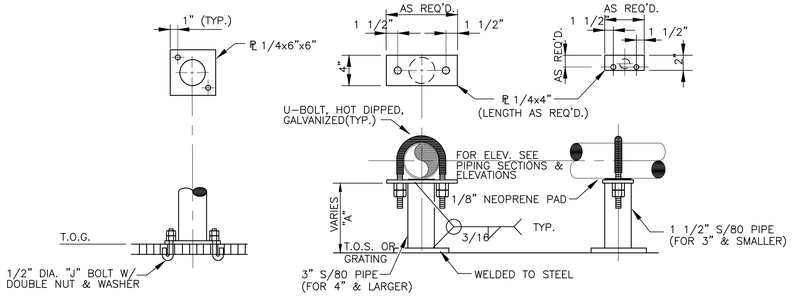

PIPE SUPPORT ON GRATING OR STEEL

5 / - **DETAIL**
SCALE: NOT TO SCALE

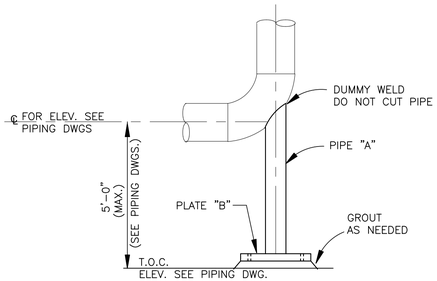

LINE SIZE	PIPE "A"	PLATE "B"
2"	1 1/2" SCH. 80	7"x7"x3/8"
3" & 4"	2" SCH. 40	8"x8"x3/8"
6" & 8"	3" SCH. 40	9"x9"x1/2"
10" & 12"	4" SCH. 40	10"x10"x1/2"
14" & 16"	6" SCH. 40	12"x12"x1/2"
18" & 24"	8" SCH. 40	14"x14"x3/4"
26" & 36"	12"-3/8" WALL	18"x18"x3/4"

PIPE SUPPORT @ BASE ELL

6 / - **DETAIL**
SCALE: NOT TO SCALE

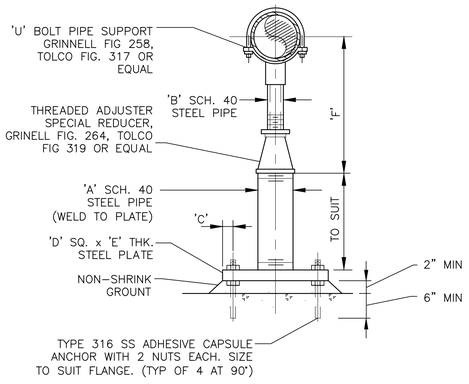

DIMENSIONS IN INCHES (APPROXIMATE)							
PIPE SIZE	A	B	C	D	E	F (APPROXIMATE)	
						MINIMUM	MAXIMUM
3	2½"	1½"	1⅛"	7½"	½"	8¼"	11¾"
4	3	2½"	1⅛"	7½"	½"	10¼"	14
6	3	2½"	1⅛"	7½"	½"	11⅝"	15¼"
8	3	2½"	1⅛"	7½"	½"	13⅜"	16½"
10	3	2½"	1⅛"	7½"	½"	14⅝"	18¼"

ADJUSTABLE U-BOLT PIPE SUPPORT

3 / - **DETAIL**
SCALE: NTS

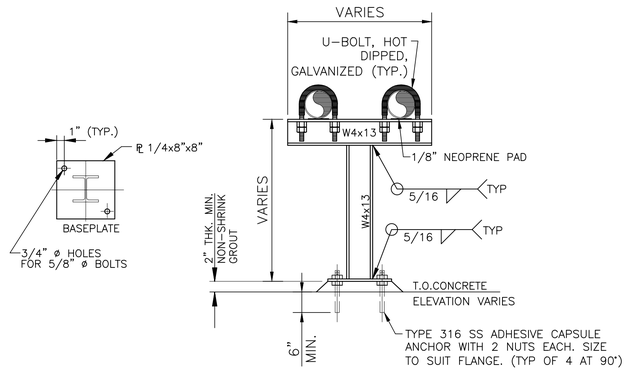

7 / - **DETAIL**
SCALE: NOT TO SCALE

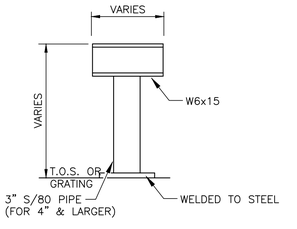

8 / - **DETAIL**
SCALE: NOT TO SCALE

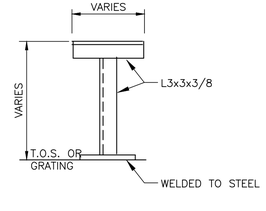

9 / - **DETAIL**
SCALE: NOT TO SCALE

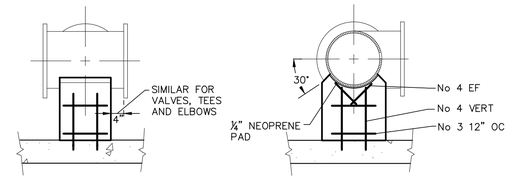

CONCRETE BASE SUPPORT

4 / - **DETAIL**
SCALE: NOT TO SCALE

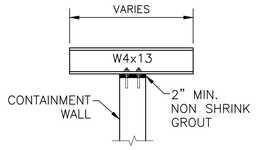

10 / - **DETAIL**
SCALE: NOT TO SCALE

PIPE SUPPORT NOTES:

1. UNDER VALVES, METERS OR OTHER SPECIAL APPURTENANCES, A FABRICATED SUPPORT PIECE MAY BE UTILIZED AS ACCEPTABLE TO ENGINEER.
2. FOR ADDITIONAL REQUIREMENTS SEE SPECIFICATIONS FOR PIPE SUPPORTS.
3. PIPE SUPPORT FOUNDATION FOR PIPING IN EARTHEN CONTAINMENT AREA SHALL BE SIMILAR TO CATWALK SUPPORTS FOUNDATION, SEE SHEET SB-10, SECTION A.
4. PIPE SUPPORTS SHOWN ARE TYPICAL. CONTRACTOR SHALL SUBMIT PIPE SUPPORT DETAILS AND PLAN FOR PIPING ON AND OFF CONTAINMENT.
5. 1/4" NEOPRENE PAD SHALL BE PROVIDED UNDER PIPING AT PIPE SUPPORTS.

A AS-BUILT REVISIONS NOT PROVIDED FOR THIS SHEET BY THE CONTRACTOR.

THIS DOCUMENT ORIGINALLY ISSUED AND SEALED BY LISBETH HABANS NAGRATH, LICENCE No. 36792 ON 2-6-15. THIS DOCUMENT SHOULD NOT BE CONSIDERED A CERTIFIED DOCUMENT.

Trigon
Quality ▲ Commitment ▲ Client Service

TRIGON DWG. NO. MZ-02

TRIGON ASSOCIATES, LLC
1515 POYDRAS STREET
SUITE 2200
NEW ORLEANS, LA 70112
TEL: 504-585-5767
trigonassociates.com

REV.	DATE	DESCRIPTION	BY
A	10-25-19	AS-BUILT MARKUPS	LHN

SEWERAGE AND WATER BOARD OF NEW ORLEANS

CONTRACT No. 1369

HMGP EMERGENCY FUEL STORAGE RETROFIT POWER PLANT
MAIN WATER PURIFICATION PLANT POWER COMPLEX

MECHANICAL DETAILS

DR: SJ CLARK
CK: GA KOLENOVSKY
AP: LH NAGRATH
LAST EDIT:
SCALE: AS NOTED
DATE: JANUARY 28, 2015

GENERAL SUPERINTENDENT

DWG. No. 12098-W8

SET NO:
SHEET NO: 42 OF 72

ABBREVIATIONS

A	AMPS
AFF	ABOVE FINISHED FLOOR
AIC	AMPERE INTERRUPTING CAPACITY
BLDG	BUILDING
C	CONDUIT
CO	CONDUIT ONLY
CKT	CIRCUIT
CPB	CONTROL PULL BOX
CTB	CONTROL TERMINAL BLOCK
DBC	DEAD BREAK CONNECTOR ELBOW
DISC SW	DISCONNECT SWITCH
C (E)	EMPTY CONDUIT
EMT	ELECTRICAL METAL TUBING
EPM	ELECTRONIC POWER METER
EW	EACH WAY
EWC	ELECTRIC WATER COOLER
F	FUSE, FUSIBLE
FACP	FIRE ALARM CONTROL PANEL
FCI	FAULT CIRCUIT INDICATOR
FL	FLOOR
GFI	GROUND FAULT INTERRUPTOR
GFS	GROUND FAULT SENSOR
GND	GROUND
HP	HORSEPOWER
KW	KILOWATT
KVA	KILOVOLTAMPERES
LBC	LOAD BREAK CONNECTOR ELBOW
LC	LIGHTING CONTACTOR
LRFI	LOAD BREAK ROTATABLE FEED THRU INSERT
MCB	MAIN CIRCUIT BREAKER
MH or M/H	MANHOLE
MLO	MAIN LUGS ONLY
MOVE	METAL OXIDE VARISTOR ELBOW
MT	MOUNT
MTD	MOUNTED
MTR	MOTOR
NF	NON-FUSED
NTS	NOT TO SCALE
PC	PHOTOCELL
PPB	POWER PULL BOX
PTB	POWER TERMINAL BLOCK
PVC	POLYVINYL CHLORIDE
REC, RECPT	RECEPTACLE
RGS	RIGID GALVANIZED STEEL
SBJ	SYSTEM BONDING JUMPER
SSBJ	SUPPLY SIDE BONDING JUMPER
SC	SECTIONALIZING CABINET
TTB	TELEPHONE TERMINAL BOARD
TYP	TYPICAL
UG	UNDERGROUND
UON	UNLESS OTHERWISE NOTED
VFI	VACUUM FAULT INTERRUPTER
WP	WEATHERPROOF

COLOR CODE ABBREVIATIONS

BK	BLACK
W	WHITE
R	RED
G	GREEN
O	ORANGE
BU	BLUE
A	AMBER
Y	YELLOW
R BK	RED BASE W/BLACK TRACER (TYP)

PLAN DRAWING SYMBOLS

- XX-XXX — CONDUIT OR CABLE TAG (SEE CONDUIT SCHEDULE)
- CONDUIT RUN ABOVE GROUND
- CONDUIT RUN UNDERGROUND
- CONDUIT TURNING UP OR TOWARDS
- CONDUIT TURNING DOWN OR AWAY
- G — COPPER GROUND WIRE
- LIGHTING AND RECEPTACLE PANELBOARD
- DISTRIBUTION PANELBOARD
- LA-1,3 — HOMERUN TO PANELBOARD "LA" SMALL CROSSMARKS INDICATE HOT WIRE, LARGE CROSSMARK INDICATES NEUTRAL. GROUND WIRE NOT SHOWN BUT SHALL BE INCLUDED IN ALL CIRCUITS. WIRING #12 IN 3/4"C. UNLESS INDICATED OTHERWISE.
- DISCONNECT SWITCH
- MOTOR STARTER
- COMBINATION MOTOR STARTER
- THERMAL OVERLOAD SWITCH
- SINGLE POLE SWITCH – 20A, 120/277V, MTD. 48" AFF.
- SINGLE POLE DIMMING SWITCH
- 3 WAY SWITCH – 20A, 120/277V, MTD. 48" AFF.
- KEYLOCK LIGHT SWITCH, MTD. 48" AFF.
- JUNCTION BOX – USE RAISED COVER & BLANK PANEL IN FINISHED AREAS
- GFI — RECEPTACLE WITH GROUND FAULT INTERRUPTER
- RECEPTACLE – DUPLEX, 20A, 1ø, 120V, 3 POLES, GROUNDED
- RECEPTACLE LOCATED ABOVE COUNTER
- WP — WEATHERPROOF RECEPTACLE
- RECEPTACLE CONNECTED TO EMERGENCY POWER
- RECEPTACLE – FOURPLEX, 20A, 1ø, 120V, GROUNDED
- RECEPTACLE – 208V, 1ø, GROUNDED
- RECEPTACLE – 208V, 3ø, GROUNDED
- RECEPTACLE – 240V, 1ø, GROUNDED
- ELECTRIC MOTOR
- GROUND ROD
- GROUND TEST WELL
- MH — MANHOLE
- X — ELECTRICAL NOTE DESIGNATION TAG (SPECIFIC TO EACH SHEET)

ANSI DEVICE NUMBERS

27	UNDERVOLTAGE RELAY
32	DIRECTIONAL POWER RELAY
60	VOLTAGE BALANCE RELAY
63	SUDDEN PRESSURE RELAY
67	AC DIRECTIONAL OVERCURRENT RELAY
86	LOCK OUT RELAY

ONE LINE SYMBOLS

- HORN GAP SWITCH
- POWER CIRCUIT AND EQUIPMENT
- FUTURE
- EXISTING
- POLE MOUNTED FUSED DISCONNECT SWITCH
- DISCONNECT SWITCH
- FUSED DISCONNECT SWITCH
- AIR BREAK LOAD INTERRUPTER SWITCH
- DRAWOUT FUSE SWITCH
- FUSE * INDICATES RATING AMPERES (* 100A)
- DRAWOUT VACUUM BREAKER
- DRAWOUT AIR BREAKER
- CURRENT LIMITING BREAKER
- 200/5 / 3 — CURRENT TRANSFORMER INDICATES RATIO AND NUMBER
- POTENTIAL TRANSFORMER
- GROUND
- RISER POLE LIGHTNING ARRESTOR
- MOVE SURGE ARRESTOR ELBOW
- SURGE CAPACITOR & LIGHTNING ARRESTOR
- 3 POSITION (GROUND, OPEN, CLOSED) LOAD INTERRUPTER SWITCH
- 3 POSITION (GROUND, OPEN, CLOSED) LOAD INTERRUPTER SWITCH WITH OVERCURRENT CONTROL
- STRESS CONE
- BUS DUCT
- DRAWOUT CONTACTOR (ATS)
- B SOURCE / A SOURCE / COIL — FOUR POSITION SWITCH (LOOP FEED) "T-BLADE"
  AB – CLOSE TO COIL
  B – COIL
  A – COIL
  AB – OPEN TO COIL

LIGHTING SYMBOLS

- 2x4 FLUORESCENT LIGHTING FIXTURE
- 2x2 FLUORESCENT LIGHTING FIXTURE
- 1x4 FLUORESCENT LIGHTING FIXTURE
- WALL MOUNTED FLUORESCENT LIGHTING FIXTURE
- FLOURESCENT STRIP LIGHT
- SURFACE MOUNTED INCANDESCENT/H.I.D. FIXTURE
- WALL MOUNTED H.I.D. FIXTURE
- WALL MOUNTED SELF-CONTAINED EMERGENCY LIGHTS
- EXIT LIGHT

TELEPHONE/COMMUNICATIONS SYMBOLS

- TELEPHONE OUTLET 1-GANG J.B. W/ 3/4" C (E) STUBBED UP ABOVE CEILING W/ PULL STRING
- COMBINATION TEL./DATA OUTLET 1-GANG J.B. W/ 3/4" C (E) STUBBED UP ABOVE CEILING W/ PULL STRING
- DATA OUTLET 1-GANG J.B. W/ 3/4" C (E) STUBBED UP ABOVE CEILING

GENERAL NOTES: (PERTAINS TO ALL SHEETS)

1. CONTRACTOR SHALL INSURE THAT ALL ELECTRICAL WORK SHALL COMPLY WITH THE MINIMUM REQUIREMENTS OF THE 2011 NATIONAL ELECTRICAL CODE (NEC) AND ANY LOCAL, STATE AND FEDERAL CODES AND/OR RESTRICTIONS.
2. THE INTENT OF THESE DRAWINGS IS TO DEFINE THE CONCEPTUAL SCOPE OF WORK. IT IS THE CONTRACTOR'S RESPONSIBILITY TO SUPPLY ALL NECESSARY MATERIAL AND LABOR TO FURNISH A COMPLETE AND OPERABLE ELECTRICAL SYSTEM.
3. THE CONTRACTOR IS RESPONSIBLE FOR PAYING ALL TAXES AND LICENSES AS A RESULT OF HIS WORK.
4. THE CONTRACTOR SHALL BE RESPONSIBLE FOR OR REPLACE/REPAIR AT HIS OWN EXPENSE ANY AND ALL CONSTRUCTION THAT IS DAMAGED BY HIS WORK TO MATCH EXISTING. THIS NEW REPAIR OR REPLACEMENT WORK SHALL BE DONE TO THE OWNER'S SATISFACTION, OR THE OWNER SHALL HAVE THE RIGHT TO REPAIR OR REPLACE ON HIS OWN AT THE OWNER'S EXPENSE.
5. A FULL TIME SUPERINTENDENT, EXPERIENCED IN AND SKILLED IN THIS TYPE OF WORK SHALL BE ON THE JOB AT ALL TIMES DURING THE WORK. THE SUPERINTENDENT SHALL REPRESENT THE CONTRACTOR IN HIS ABSENCE AND ALL DIRECTIONS GIVEN TO HIM SHALL BE AS BINDING AS IF GIVEN DIRECTLY TO THE CONTRACTOR.
6. HAZARDOUS OR FLAMMABLE MATERIALS SHALL NOT BE STORED AT THE JOB SITE AT ANY TIME.
7. THE CONTRACTOR SHALL RELOCATE ANY ELECTRICAL OR MECHANICAL DEVICES THAT ARE IN CONFLICT WITH THE NEW WORK AS A PART OF THIS CONTRACT. CONTRACTOR SHALL CONSULT WITH THE CONTRACTING OFFICER'S REPRESENTATIVE FOR EXACT LOCATION OF RELOCATED DEVICES.
8. GROUNDING SHALL BE IN ACCORDANCE WITH THE NATIONAL ELECTRICAL CODE (NEC). CONTRACTOR SHALL INSTALL A PROPERLY SIZED GROUND WIRE IN EVERY CONDUIT RUN.
9. ALL ABOVE GROUND CONDUIT AND FITTINGS SHALL BE RIGID ALUM.
10. ALL MATERIALS AND TESTING OF ELECTRICAL EQUIPMENT SHALL CONFORM TO THE LATEST PUBLISHED STANDARDS OF THE IEEE, NEMA, ANSI AND ASTM CODES WHERE APPLICABLE.
11. WHERE TWO OR MORE REGULATIONS OR CODES ARE APPLICABLE, THE MOST STRINGENT SHALL APPLY.
12. ALL ELECTRICAL MATERIAL AND EQUIPMENT SHALL BE LISTED OR LABELED UL (UNDERWRITERS LABORATORIES), FM (FACTORY MUTUAL), OR EQUIVALENT TESTING LABORATORY, FOR THE SERVICE IN WHICH IT IS USED, AND SHALL BEAR THEIR LABEL OR LISTING.
13. BREATHERS AND DRAINS SHALL BE PROVIDED AT HIGH AND LOW POINTS OF THE CONDUIT SYSTEM TO PREVENT THE ACCUMULATION OF CONDENSED WATER.
14. CONTRACTOR SHALL FIELD ROUTE AND SUPPORT CONDUITS FROM NEW & EXISTING RACKS OR STRUCTURES.
15. ALL MATERIAL & DEVICES SHALL BE INSTALLED PER MANUFACTURER'S RECOMMENDATIONS.
16. ALL REQUIRED DIMENSIONS SHALL BE VERIFIED AT THE JOB SITE BEFORE INSTALLATION OF EQUIPMENT.
17. ALL ITEMS ARE TO BE PROVIDED AS NEW UNDER THIS CONTRACT UNLESS ITEM IS MARKED "EXISTING".
18. ALL ELECTRICAL SHALL BE PERFORMED BY A LICENSED ELECTRICAL CONTRACTOR.
19. USE OXIDATION INHIBITING COMPOUND ON ALL CONDUCTOR TERMINATIONS INSIDE SERVICE EQUIPMENT, DISCONNECT SWITCHES, FUSE HOLDERS AND ON FUSE FERRULES, TERMINAL BOXES, ELECTRICAL PANELS, CONTROL PANELS AND GROUNDING CONNECTIONS. CONTROL WIRING SIZES #12 AND SMALLER INSIDE CONTROL PANELS IS EXEMPT FROM REQUIREMENT.
20. OBTAIN A CITY OF NEW ORLEANS PERMIT AND ELECTRICAL INSPECTION.

SHEET NUMBERING SYSTEM

SEQUENTIAL SHEET NUMBER

DISCIPLINE
- G-GENERAL
- C-CIVIL
- S-STRUCTURAL
- M-MECHANICAL
- E-ELECTRICAL
- I-INSTRUMENTATION

EZ-01

DENOTES AREA OR STANDARD DETAIL SHEETS
- A – GENERAL DISCIPLINE SHEETS
- B – EMERGENCY FUEL STORAGE TANK AREA
- C – DAY TANK / BOILER ROOM BASEMENT AREA
- Z – STANDARD DETAIL SHEETS

DEPICTED IS STANDARD ELECTRICAL DETAIL SHEET NO. 1

A — AS-BUILT REVISIONS NOT PROVIDED FOR THIS SHEET BY THE CONTRACTOR

THIS DOCUMENT ORIGINALLY ISSUED AND SEALED BY HENRY G. HAWNEY, LICENCE No. 19229 ON 2-6-15.

E

Trigon — Quality ▲ Commitment ▲ Client Service

TRIGON DWG. NO. EA-01

TRIGON ASSOCIATES, LLC
1515 POYDRAS STREET
SUITE 2200
NEW ORLEANS, LA 70112
TEL: 504-585-5767
trigonassociates.com

REV.	DATE	AS-BUILT MARKUPS	BY
A	10-25-19	AS-BUILT MARKUPS	LHN

SEWERAGE AND WATER BOARD OF NEW ORLEANS

CONTRACT No. 1369

HMGP EMERGENCY FUEL STORAGE
RETROFIT POWER PLANT
MAIN WATER PURIFICATION PLANT POWER COMPLEX

ELECTRICAL NOTES & SYMBOLS SCHEDULES

DR: S. CLARK
CK: H. HAWNEY
AP: H. HAWNEY
LAST EDIT:
SCALE: NOT TO SCALE
DATE: JANUARY 28, 2015

GENERAL SUPERINTENDENT

DWG. No. 12098-W8

SET NO:

SHEET NO: 43 OF 72

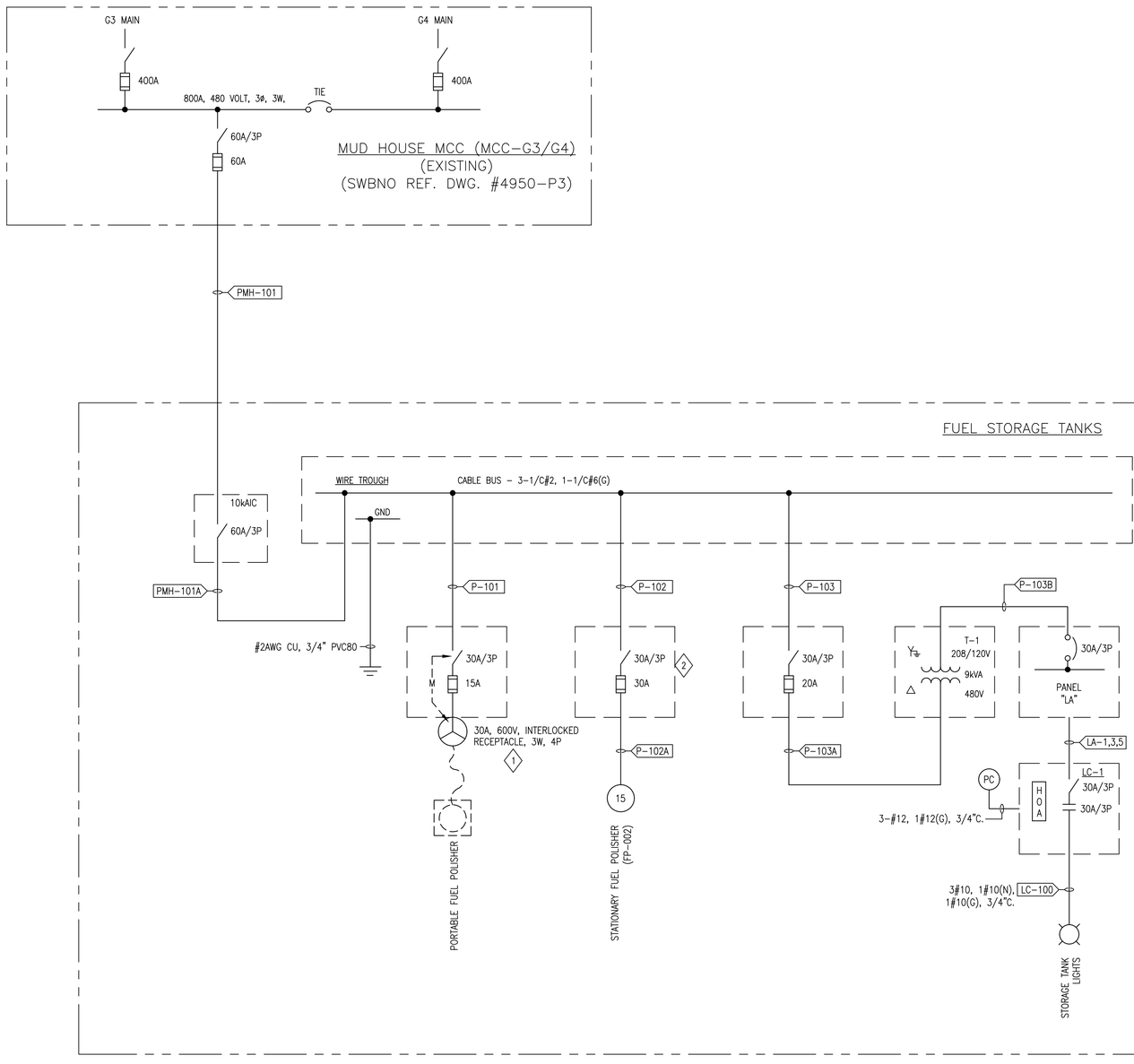

FUEL STORAGE TANKS ONE LINE DIAGRAM

A – DIAGRAM

NTS

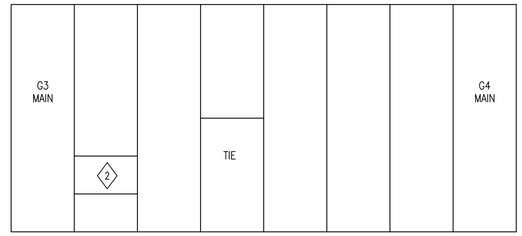

MUD HOUSE MCC-G3/G4 FRONT ELEVATION 1

NOTES:

1. MCC G3/G4 IS GE 800 LINE, CAT#605X0120L01.
2. 60A, 600V, 3P, SPARE SWITCH IS EXISTING. FUSE WITH 60A CLASS R FUSES & USE AS "OIL STORAGE TANKS FEEDER". RE-LABEL MCC DOOR.

NOTES:

1. 30A, 600V, 3P, 4W, INTERLOCKED RECEPTACLE, HP RATED (7½HP), NEMA 4X 304SS, FUSED, VIEWING WINDOW, CROUSE HINDS WSRDW3352 SM S901, WITH MATING 3W, 4P PLUG, CROUSE HINDS APJ3485 OR EQUAL.
2. VERIFY SIZE AND FUSING WITH STATIONARY POLISHER MANUFACTURER.

A AS-BUILT REVISIONS NOT PROVIDED FOR THIS SHEET BY THE CONTRACTOR

THIS DOCUMENT ORIGINALLY ISSUED AND SEALED BY HENRY G. HAWNEY, LICENCE No. 19229 ON 2-6-15.

REV.	DATE		BY
A	10-25-19	AS-BUILT MARKUPS	LHN

SEWERAGE AND WATER BOARD OF NEW ORLEANS

CONTRACT No. 1369

HMGP EMERGENCY FUEL STORAGE
RETROFIT POWER PLANT
MAIN WATER PURIFICATION PLANT POWER COMPLEX

FUEL STORAGE TANKS
ONE LINE DIAGRAM

DR:	S. CLARK
CK:	H. HAWNEY
AP:	H. HAWNEY
LAST EDIT:	
SCALE:	NOT TO SCALE
DATE:	JANUARY 28, 2015

GENERAL SUPERINTENDENT

DWG. No. 12098-W8

SET NO: SHEET NO: 44 OF 72

E

Trigon
Quality ▲ Commitment ▲ Client Service

TRIGON DWG. NO. EA-02

TRIGON ASSOCIATES, LLC
1515 POYDRAS STREET
SUITE 2200
NEW ORLEANS, LA 70112
TEL: 504-585-5767

trigonassociates.com

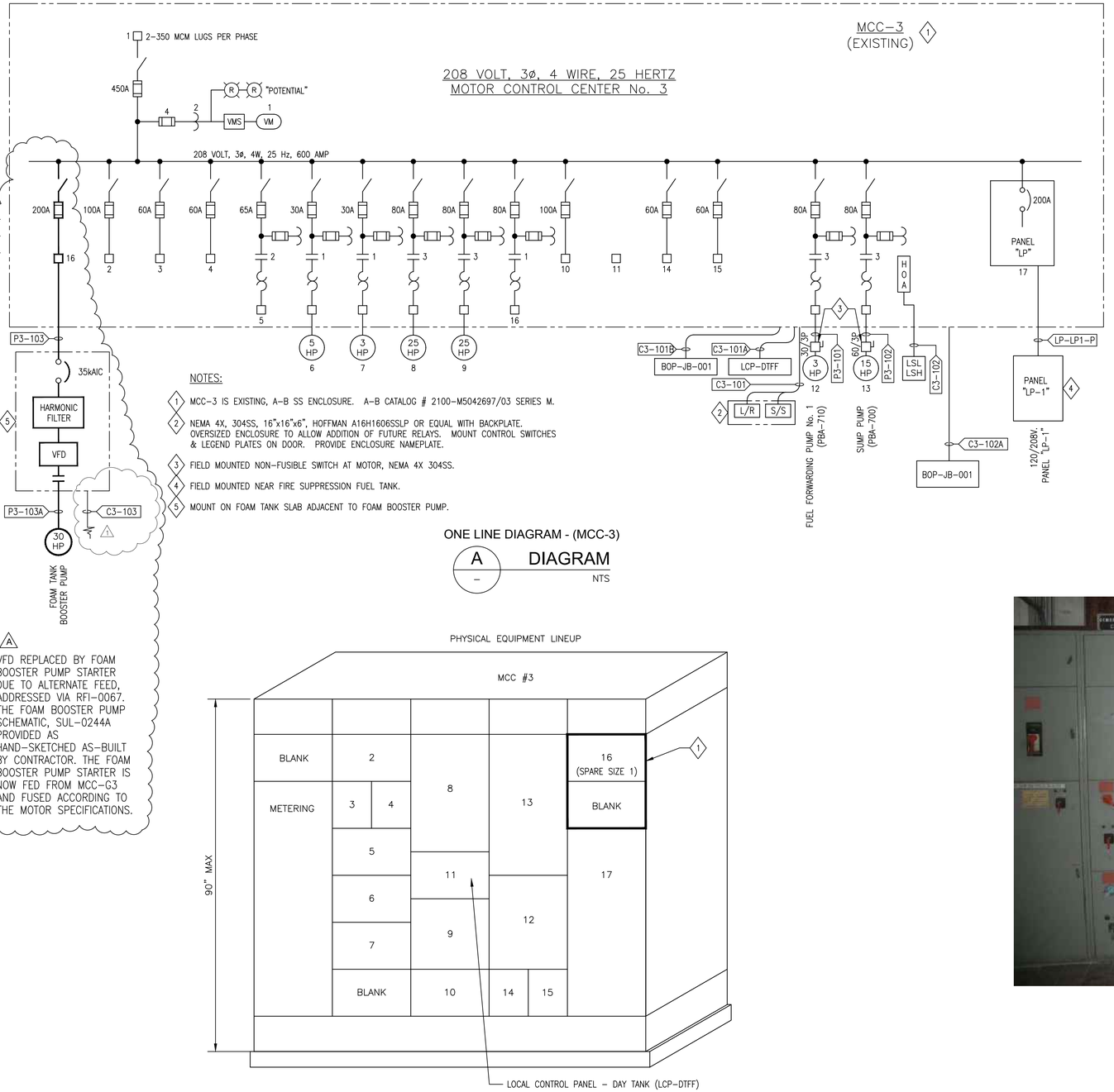

NOTES:

1. MCC–3 IS EXISTING, A–B SS ENCLOSURE. A–B CATALOG # 2100–M5042697/03 SERIES M.
2. NEMA 4X, 304SS, 16"x16"x6", HOFFMAN A16H1606SSLP OR EQUAL WITH BACKPLATE. OVERSIZED ENCLOSURE TO ALLOW ADDITION OF FUTURE RELAYS. MOUNT CONTROL SWITCHES & LEGEND PLATES ON DOOR. PROVIDE ENCLOSURE NAMEPLATE.
3. FIELD MOUNTED NON–FUSIBLE SWITCH AT MOTOR, NEMA 4X 304SS.
4. FIELD MOUNTED NEAR FIRE SUPPRESSION FUEL TANK.
5. MOUNT ON FOAM TANK SLAB ADJACENT TO FOAM BOOSTER PUMP.

ONE LINE DIAGRAM - (MCC-3)

A – DIAGRAM, NTS

A. VFD REPLACED BY FOAM BOOSTER PUMP STARTER DUE TO ALTERNATE FEED, ADDRESSED VIA RFI–0067. THE FOAM BOOSTER PUMP SCHEMATIC, SUL–0244A PROVIDED AS HAND–SKETCHED AS–BUILT BY CONTRACTOR. THE FOAM BOOSTER PUMP STARTER IS NOW FED FROM MCC–G3 AND FUSED ACCORDING TO THE MOTOR SPECIFICATIONS.

MCC-3

1 – ELEVATION, SCALE: 3/4"=1'–0"

NOTES:

1. REMOVE SPARE SIZE 1 & BLANK DOOR. INSTALL MCC BUCKET WITH 200AMP/3P FUSED SWITCH. FUSE WITH 200AMP CLASS R FUSES. OBTAIN SERVICES OF AB FIELD ENGINEER TO MAKE ALL MCC MODIFICATIONS.

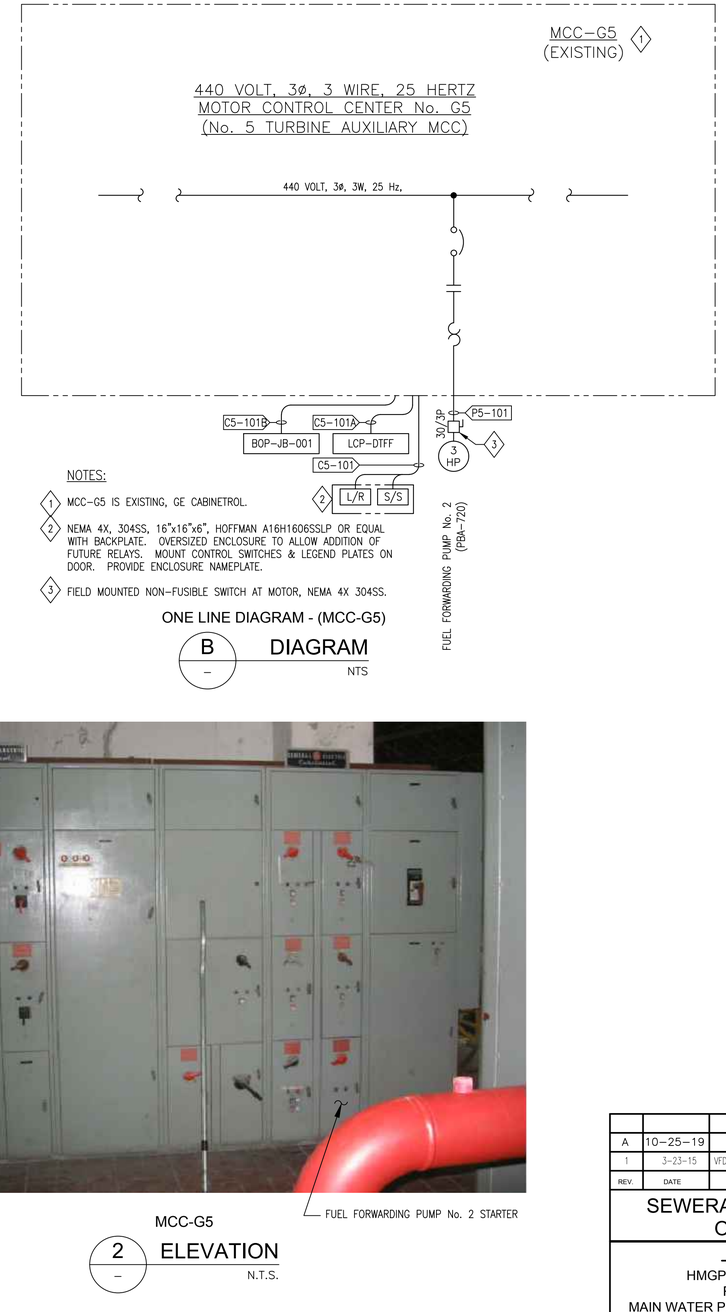

NOTES:

1. MCC–G5 IS EXISTING, GE CABINETROL.
2. NEMA 4X, 304SS, 16"x16"x6", HOFFMAN A16H1606SSLP OR EQUAL WITH BACKPLATE. OVERSIZED ENCLOSURE TO ALLOW ADDITION OF FUTURE RELAYS. MOUNT CONTROL SWITCHES & LEGEND PLATES ON DOOR. PROVIDE ENCLOSURE NAMEPLATE.
3. FIELD MOUNTED NON–FUSIBLE SWITCH AT MOTOR, NEMA 4X 304SS.

ONE LINE DIAGRAM - (MCC-G5)

B – DIAGRAM, NTS

MCC-G5

2 – ELEVATION, N.T.S.

REV.	DATE		BY
A	10–25–19	AS–BUILT MARKUPS	LHN
1	3–23–15	VFD SPACE HEATER REVISION, DIAGRAM "A" (ADD.3)	HGH

SEWERAGE AND WATER BOARD OF NEW ORLEANS

CONTRACT No. 1369

HMGP EMERGENCY FUEL STORAGE
RETROFIT POWER PLANT
MAIN WATER PURIFICATION PLANT POWER COMPLEX

MCC-3 & G5 ONE LINE DIAGRAMS & EQUIPMENT LAYOUT

THIS DOCUMENT ORIGINALLY ISSUED AND SEALED BY HENRY G. HAWNEY, LICENCE No. 19229 ON 2-6-15.

E

Trigon — Quality ▲ Commitment ▲ Client Service

TRIGON DWG. NO. EA-03

TRIGON ASSOCIATES, LLC
1515 POYDRAS STREET
SUITE 2200
NEW ORLEANS, LA 70112
TEL: 504-585-5767
trigonassociates.com

DR.	S. CLARK
CK:	H. HAWNEY
AP:	H. HAWNEY
LAST EDIT:	
SCALE:	NOT TO SCALE
DATE:	JANUARY 28, 2015

GENERAL SUPERINTENDENT

DWG. No. 12098-W8

SET NO: SHEET NO: 45 OF 72

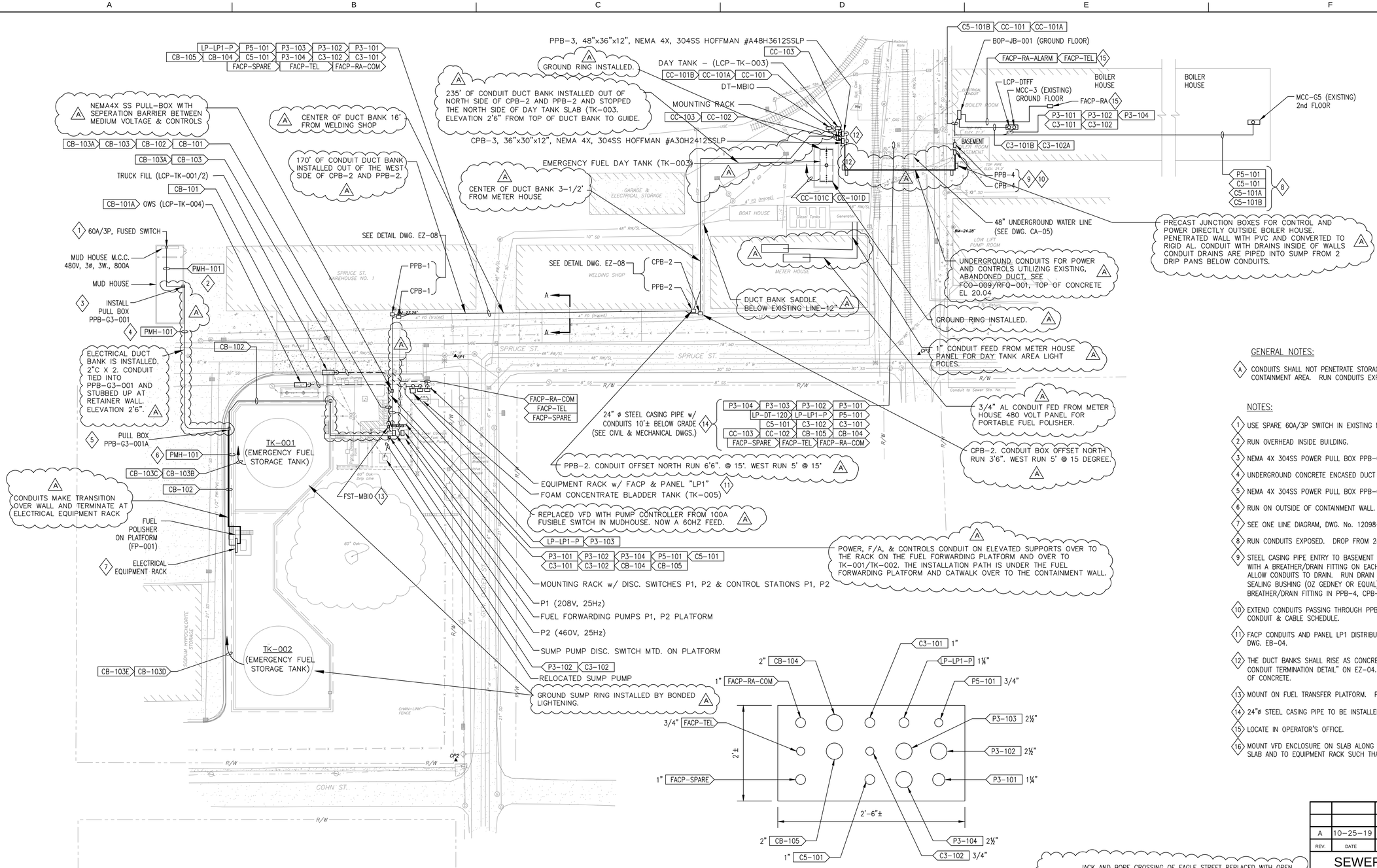

DUCT BANK - SECTION A-A

N.T.S.

(INSTALL PER DETAILS ON DWG. EZ-04)

1 OVERALL ELECTRICAL PLAN

SCALE: 1"=40'

A JACK AND BORE CROSSING OF EAGLE STREET REPLACED WITH OPEN CUT/TROUGH INSTALLATION FCO-009/RFQ-001. SEE SUL-0243 FOR CONTRACTOR PROVIDED HAND-DRAWN SKETCHES OF AS-BUILTS. USE OF 60 HZ FEED FROM MUD PUMP ROOM MCC-G3 IN LIEU OF 25 CYCLE WITH VFD FOR FIRE SUPPRESSION SYSTEM EQUIPMENT WAS APPROVED WITH RFI-0067.

GENERAL NOTES:

A CONDUITS SHALL NOT PENETRATE STORAGE TANK FLOOR INSIDE CONTAINMENT AREA. RUN CONDUITS EXPOSED ALONG CONTAINMENT WALLS.

NOTES:

1. USE SPARE 60A/3P SWITCH IN EXISTING MCC-G3.
2. RUN OVERHEAD INSIDE BUILDING.
3. NEMA 4X 304SS POWER PULL BOX PPB-G3-001.
4. UNDERGROUND CONCRETE ENCASED DUCT BANK WITH REBAR.
5. NEMA 4X 304SS POWER PULL BOX PPB-G3-001A. RISE OUTSIDE CONTAINMENT WALL.
6. RUN ON OUTSIDE OF CONTAINMENT WALL.
7. SEE ONE LINE DIAGRAM, DWG. No. 12098-W8-EA-02.
8. RUN CONDUITS EXPOSED. DROP FROM 2nd FLOOR TO BASEMENT. RUN IN BASEMENT.
9. STEEL CASING PIPE ENTRY TO BASEMENT SHALL BE WATERPROOF. PROVIDE A TEE-FITTING WITH A BREATHER/DRAIN FITTING ON EACH CONDUIT PRIOR TO ENTRY TO PPB-4, CPB-4 TO ALLOW CONDUITS TO DRAIN. RUN DRAIN TO SUMP IN BASEMENT. SEAL ALL CONDUITS WITH SEALING BUSHING (OZ GEDNEY OR EQUAL) WHERE CONDUITS ENTER PPB-4, CPB-4. PROVIDE BREATHER/DRAIN FITTING IN PPB-4, CPB-4.
10. EXTEND CONDUITS PASSING THROUGH PPB-4, CPB-4 AS CALLED FOR ON SCHEMATICS AND ON CONDUIT & CABLE SCHEDULE.
11. FACP CONDUITS AND PANEL LP1 DISTRIBUTION CIRCUITS ARE NOT SHOWN ON THIS DWG. SEE DWG. EB-04.
12. THE DUCT BANKS SHALL RISE AS CONCRETE ENCASED WITH REBAR PER "ABOVE GROUND CONDUIT TERMINATION DETAIL" ON EZ-04. WELD REBAR TO STEEL PIPE AND COVER WITH 3" OF CONCRETE.
13. MOUNT ON FUEL TRANSFER PLATFORM. PROVIDE EQUIPMENT MOUNTING RACK.
14. 24"ø STEEL CASING PIPE TO BE INSTALLED BY JACK & BORE. SEE DWG. EZ-07.
15. LOCATE IN OPERATOR'S OFFICE.
16. MOUNT VFD ENCLOSURE ON SLAB ALONG WITH FACP & PANEL LP1. SECURE ENCLOSURE TO SLAB AND TO EQUIPMENT RACK SUCH THAT STRUCTURE IS RATED FOR 150MPH WIND LOADING.

REV.	DATE	AS-BUILT MARKUPS	BY
A	10-25-19	AS-BUILT MARKUPS	LHN

SEWERAGE AND WATER BOARD OF NEW ORLEANS

CONTRACT No. 1369

HMGP EMERGENCY FUEL STORAGE RETROFIT POWER PLANT
MAIN WATER PURIFICATION PLANT POWER COMPLEX

OVERALL ELECTRICAL PLAN

THIS DOCUMENT ORIGINALLY ISSUED AND SEALED BY HENRY G. HAWNEY, LICENCE No. 19229 ON 2-6-15.

E

Trigon
Quality ▲ Commitment ▲ Client Service

TRIGON DWG. NO. EA-04

TRIGON ASSOCIATES, LLC
1515 POYDRAS STREET
SUITE 2200
NEW ORLEANS, LA 70112
TEL: 504-585-5767
trigonassociates.com

DR:	S. CLARK
CK:	H. HAWNEY
AP:	H. HAWNEY
LAST EDIT:	
SCALE:	NOT TO SCALE
DATE:	JANUARY 28, 2015

GENERAL SUPERINTENDENT

DWG. No. 12098-W8

SET NO: SHEET NO: 46 OF 72

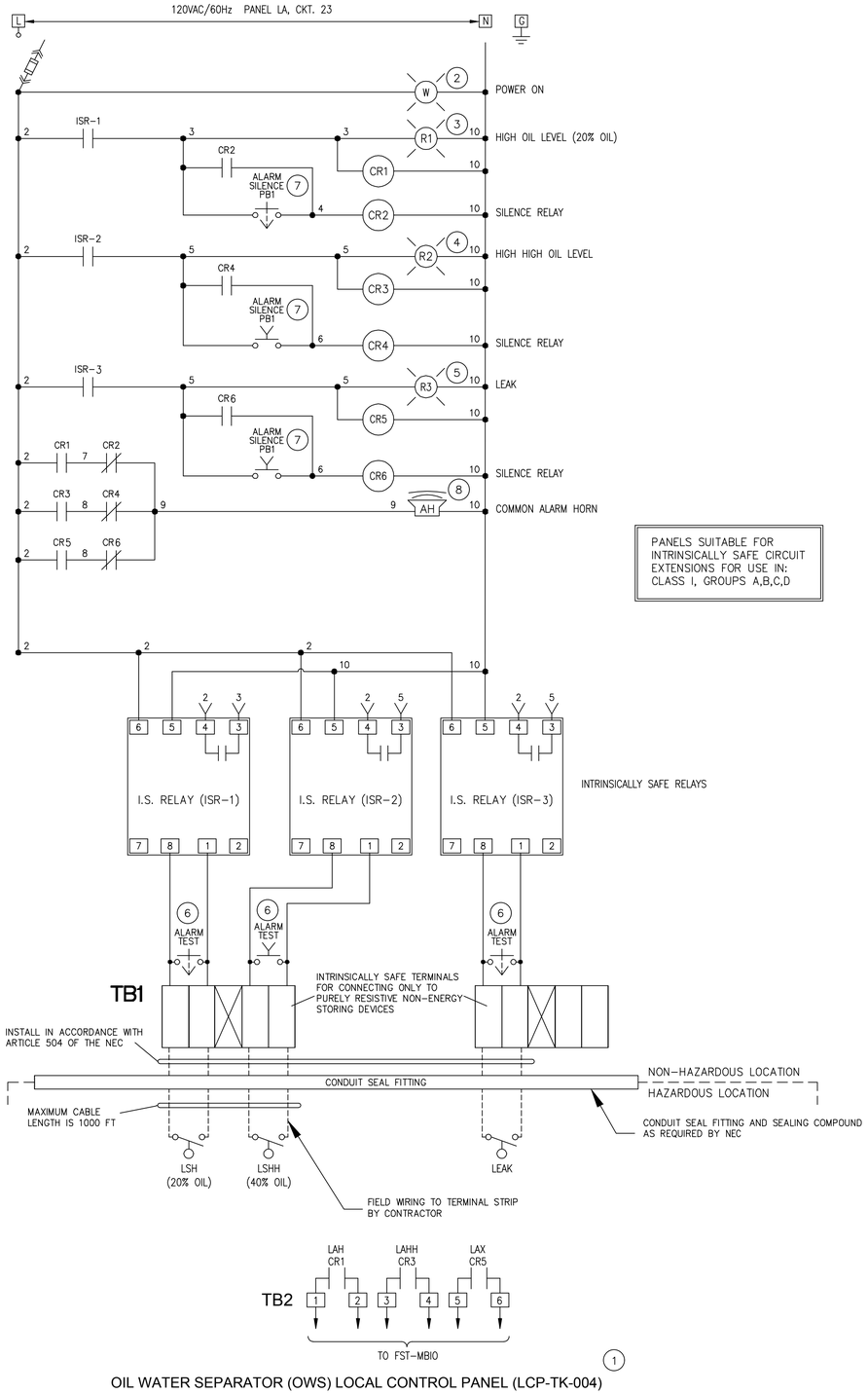

PANELS SUITABLE FOR INTRINSICALLY SAFE CIRCUIT EXTENSIONS FOR USE IN: CLASS I, GROUPS A,B,C,D

OIL WATER SEPARATOR (OWS) LOCAL CONTROL PANEL (LCP-TK-004) (1)

1 SCHEMATIC
– NTS

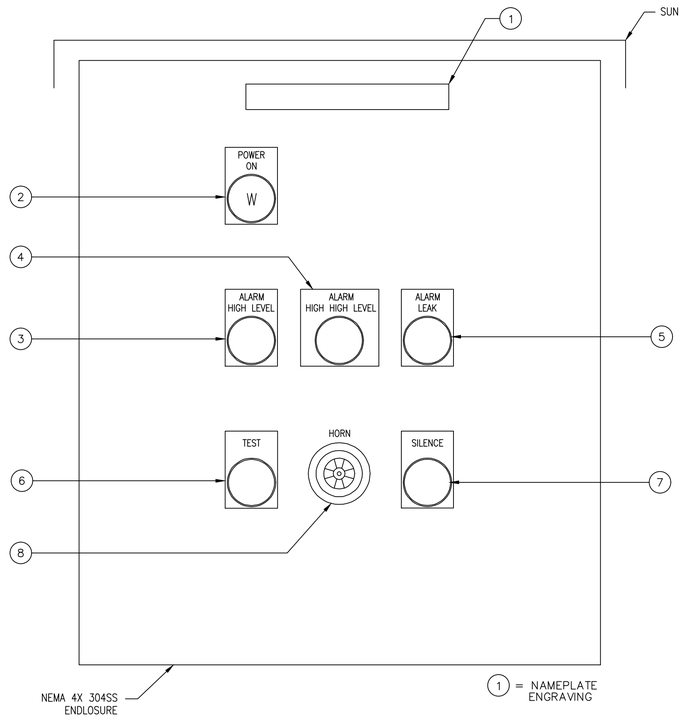

(1) OWS ALARM RELAY PANEL (LCP-TK-004)

A DIAGRAM
– NTS

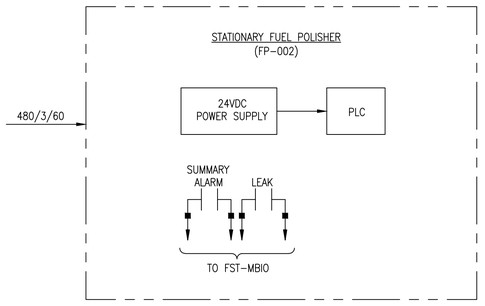

B DIAGRAM
– NTS

GENERAL NOTES:

(A) FOR CONTROL PANEL COMPONENTS, SEE SPECIFICATION SECTION 26 61 00.

(A) CONTROL PANEL AS-BUILTS PROVIDED BY RED GROUP VIA SUL-0244

THIS DOCUMENT ORIGINALLY ISSUED AND SEALED BY HENRY G. HAWNEY, LICENCE No. 19229 ON 2-6-15.

E

Trigon
Quality ▲ Commitment ▲ Client Service

TRIGON DWG. NO. EB-01

TRIGON ASSOCIATES, LLC
1515 POYDRAS STREET
SUITE 2200
NEW ORLEANS, LA 70112
TEL: 504-585-5767
trigonassociates.com

REV.	DATE	AS-BUILT MARKUPS	BY
A	10-25-19	AS-BUILT MARKUPS	LHN

SEWERAGE AND WATER BOARD OF NEW ORLEANS

CONTRACT No. 1369

HMGP EMERGENCY FUEL STORAGE
RETROFIT POWER PLANT
MAIN WATER PURIFICATION PLANT POWER COMPLEX

OIL WATER SEPARATOR SCHEMATIC & LOCAL CONTROL PNL.

DR:	S. CLARK
CK:	H. HAWNEY
AP:	H. HAWNEY
LAST EDIT:	
SCALE:	NOT TO SCALE
DATE:	JANUARY 28, 2015

GENERAL SUPERINTENDENT

DWG. No. 12098-W8

SET NO: SHEET NO: 47 OF 72

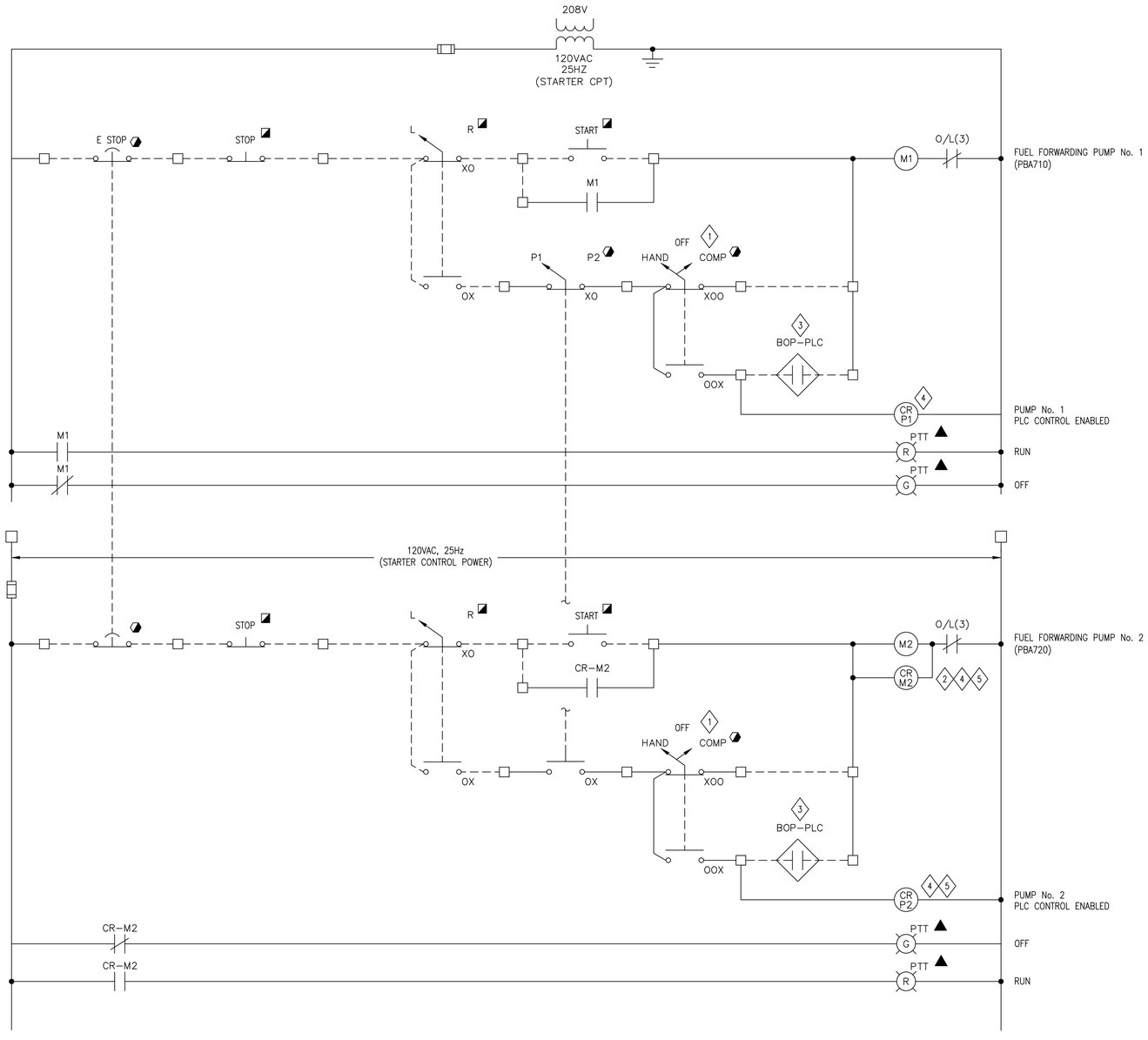

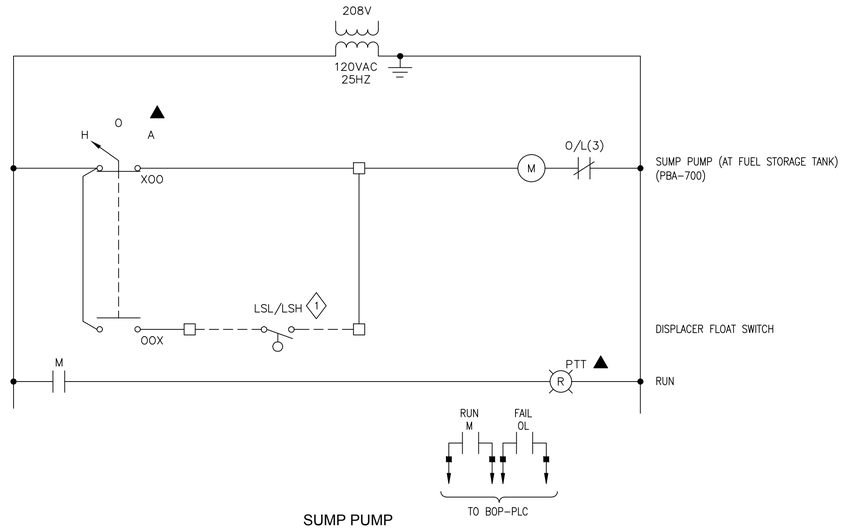

SUMP PUMP

2 – SCHEMATIC

NTS

NOTES:

1. DISPLACER FLOAT SWITCH – HIGH/LOW: EXISTING IN FIELD.

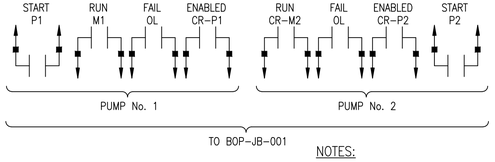

FUEL FORWARDING PUMP No. 1, No. 2

1 – SCHEMATIC

NTS

LEGEND:

- DEVICE LOCATED IN FIELD AT MOTOR
- DEVICE LOCATED AT DIESEL DAY TANK LCP (LCP–DTFF)
- DEVICE LOCATED ON STARTER
- FIELD WIRING
- TERMINAL

NOTES:

1. HAND/OFF/COMPUTER: 3 POSITION SELECTOR SWITCH; SPRING RETURN FROM HAND TO OFF, MAINTAINED POSITIONS – "OFF" & "COMPUTER" ALLEN BRADLEY 800H
2. ADD RELAY CR–M2.
3. PLC OUTPUT: PLC OUTPUT IS MAINTAINED OUTPUT. PLC CONTROL OF FORWARDING PUMPS WILL AUTOMATICALLY START/STOP PUMPS, BASED ON DAY TANK HI/LO LEVELS. REFERENCE PROJECT CP1370 AND BOP–PLC.
4. ALLEN BRADLEY RELAY #700P–401–A22. 220V/60Hz COIL TO OPERATE AT 120V/25Hz.
5. SPACE WITHIN STARTER CUBICLE IS LIMITED. MOUNT RELAYS IN EXTERNAL NEMA 12, 304SS ENCLOSURE. ATTACH LAMECOID LABEL ON ENCLOSURE WITH INSTRUCTIONS ON HOW TO KILL POWER BEFORE OPENING.

A AS–BUILT REVISIONS NOT PROVIDED FOR THIS SHEET BY THE CONTRACTOR

THIS DOCUMENT ORIGINALLY ISSUED AND SEALED BY HENRY G. HAWNEY, LICENCE No. 19229 ON 2-6-15.

E

Trigon
Quality ▲ Commitment ▲ Client Service

TRIGON DWG. NO. EB-02

TRIGON ASSOCIATES, LLC
1515 POYDRAS STREET
SUITE 2200
NEW ORLEANS, LA 70112
TEL: 504-585-5767

trigonassociates.com

REV.	DATE		BY
A	10–25–19	AS–BUILT MARKUPS	LHN
REV.	DATE	AS-BUILT MARKUPS	BY

SEWERAGE AND WATER BOARD OF NEW ORLEANS

CONTRACT No. 1369

HMGP EMERGENCY FUEL STORAGE
RETROFIT POWER PLANT
MAIN WATER PURIFICATION PLANT POWER COMPLEX

FUEL FORWARDING PUMPS & SUMP PUMP SCHEMATICS

DR:	S. CLARK
CK:	H. HAWNEY
AP:	H. HAWNEY
LAST EDIT:	
SCALE:	NOT TO SCALE
DATE:	JANUARY 28, 2015

GENERAL SUPERINTENDENT

DWG. No. 12098-W8

SET NO: SHEET NO: 48 OF 72

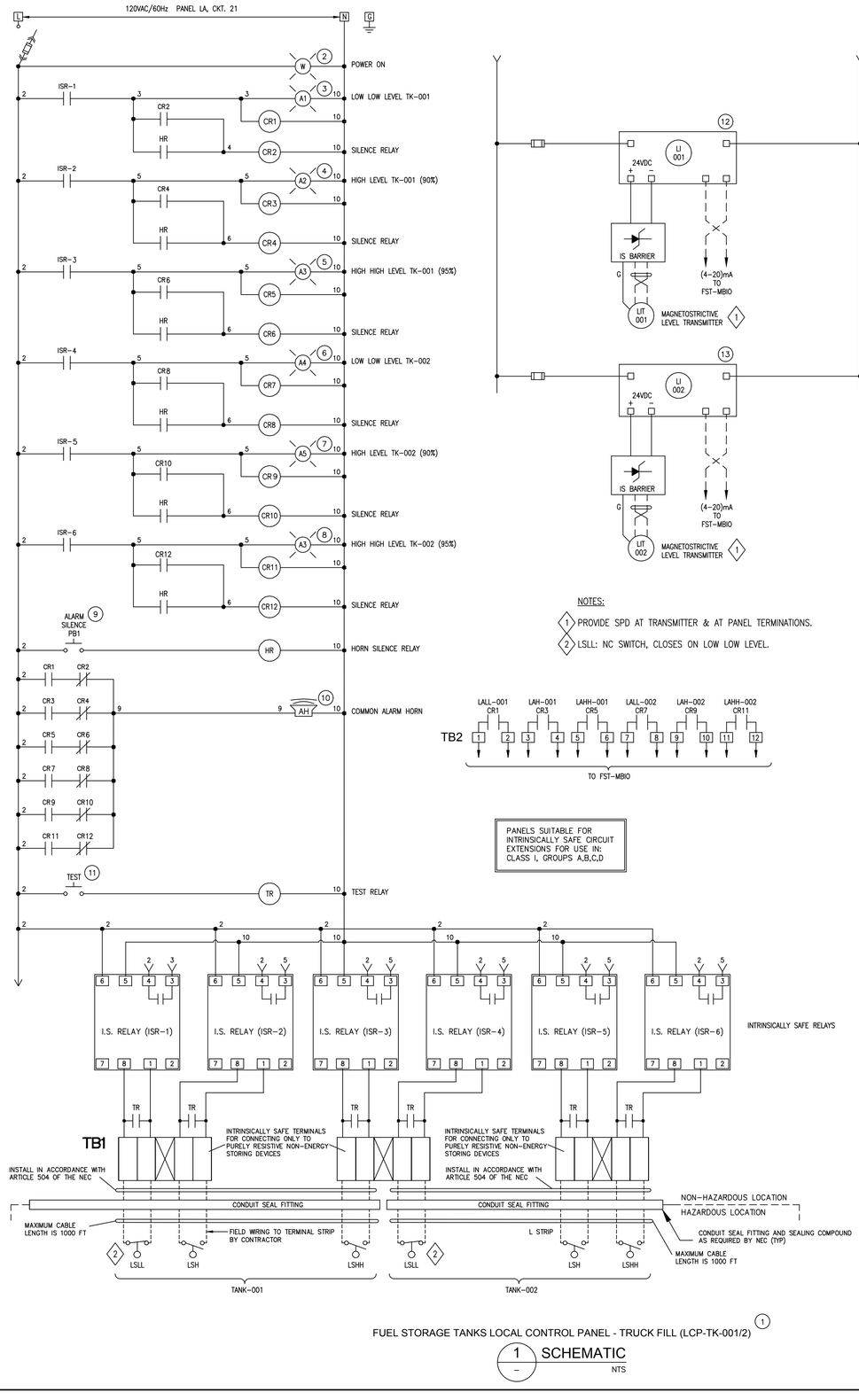

NOTES:

1. PROVIDE SPD AT TRANSMITTER & AT PANEL TERMINATIONS.
2. LSLL: NC SWITCH, CLOSES ON LOW LOW LEVEL.

(1) FUEL STORAGE TANKS LOCAL CONTROL PANEL - TRUCK FILL (LCP-TK-001/2)

1 – SCHEMATIC
NTS

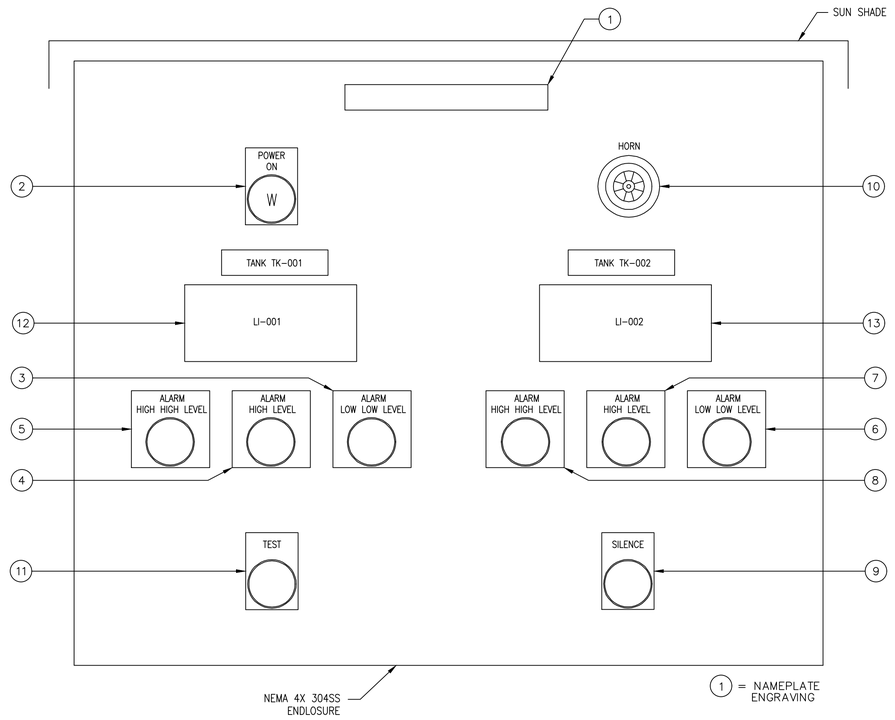

(1) FUEL STORAGE TANKS LOCAL CONTROL PANEL - TRUCK FILL (LCP-TK-001/2)

A – DIAGRAM
NTS

GENERAL NOTES:

A. FOR CONTROL PANEL COMPONENTS, SEE SPECIFICATION SECTION 26,6100.

REV.	DATE		BY
A	10-25-19	AS-BUILT MARKUPS	LHN

A CONTROL PANEL AS-BUILTS PROVIDED BY RED GROUP VIA SUL-0244

THIS DOCUMENT ORIGINALLY ISSUED AND SEALED BY HENRY G. HAWNEY, LICENCE No. 19229 ON 2-6-15.

SEWERAGE AND WATER BOARD OF NEW ORLEANS

CONTRACT No. 1369

HMGP EMERGENCY FUEL STORAGE
RETROFIT POWER PLANT
MAIN WATER PURIFICATION PLANT POWER COMPLEX

FUEL STORAGE TANKS SCHEMATIC

DR:	S. CLARK
CK:	H. HAWNEY
AP:	H. HAWNEY
LAST EDIT:	
SCALE:	NOT TO SCALE
DATE:	JANUARY 28, 2015

GENERAL SUPERINTENDENT

DWG. No. 12098-W8

SET NO: SHEET NO: 49 OF 72

TRIGON ASSOCIATES, LLC
1515 POYDRAS STREET
SUITE 2200
NEW ORLEANS, LA 70112
TEL: 504-585-5767
trigonassociates.com

Trigon
Quality ▲ Commitment ▲ Client Service

TRIGON DWG. NO. EB-03

SYMBOL LEGEND

- ⬡ — UVIR-XXX : ULTRAVIOLET/INFRARED DETECTOR; TAG NO. "XXX"
- AMM-XXX — AMM-XXX : ADDRESSABLE MONITOR MODULE; TAG NO. "XXX"
- RRM-XXX — RRM-XXX : REMOTE RELEASING MODULE; TAG NO. "XXX"
- FACP — FACP : FIRE ALARM CONTROL PANEL
- S◀ — STROBE
- PSL — PRESSURE SWITCH (LOW PRESS ALARM)
- FS-XXX — FLOW SWITCH: TAG No. "XXX"
- AMM-202-24VDC — CONDUIT TAG (TYP)
- L/R — LOCAL/REMOTE
- VFD — VARIABLE FREQUENCY DRIVE

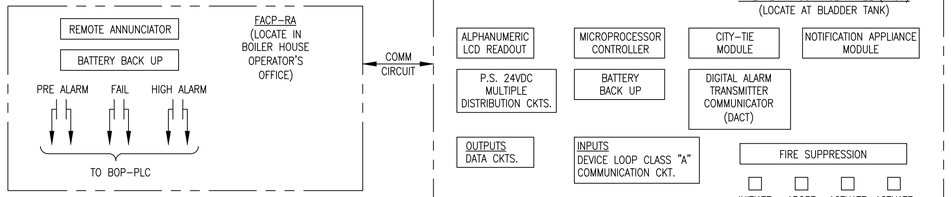

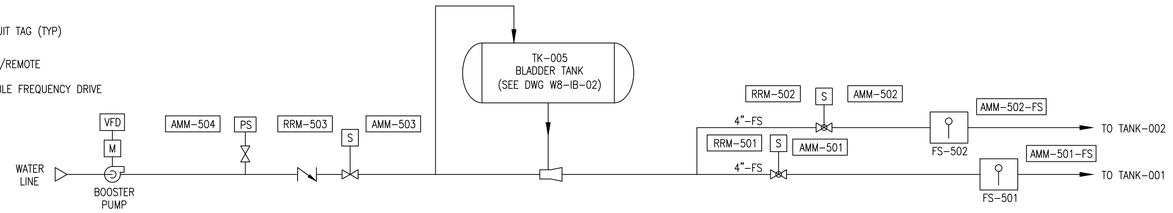

GENERAL NOTES:

A. THE SYSTEM AS SHOWN IS A GENERAL CONCEPTUAL LAYOUT. THE CONTRACTOR SHALL COORDINATE THE EQUIPMENT REQUIRED WITH HIS SUPPLIERS/MANUFACTURERS TO PROVIDE AN INTEGRATED FIRE ALARM & FIRE CONTROL SYSTEM. ALL ITEMS REQUIRED FOR A COMPLETE SYSTEM SHALL BE PROVIDED, WHETHER OR NOT SHOWN ON THIS DRAWING.

B. THE FACP CONDUITS & CABLES ARE SHOWN ON THIS DRAWING. THEY ARE NOT SHOWN ON THE CONDUIT & CABLE SCHEDULE, DWG. EZ-02.

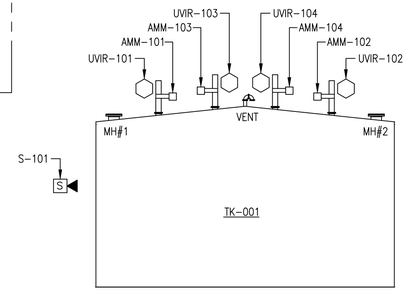

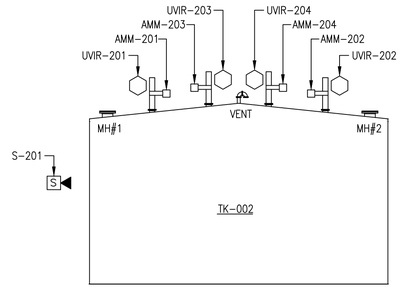

FACP - SYSTEM CONFIGURATION

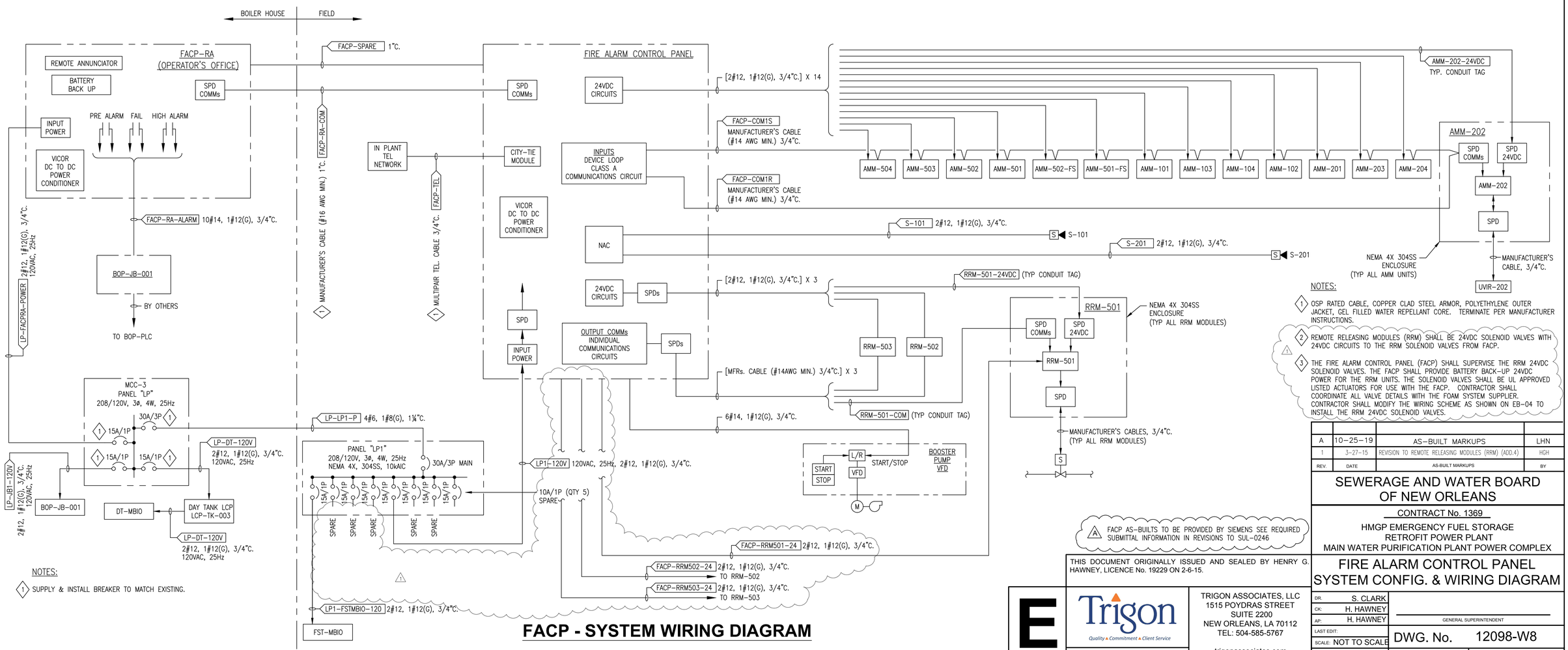

FACP - SYSTEM WIRING DIAGRAM

NOTES:

1. SUPPLY & INSTALL BREAKER TO MATCH EXISTING.

NOTES:

1. OSP RATED CABLE, COPPER CLAD STEEL ARMOR, POLYETHYLENE OUTER JACKET, GEL FILLED WATER REPELLANT CORE. TERMINATE PER MANUFACTURER INSTRUCTIONS.
2. REMOTE RELEASING MODULES (RRM) SHALL BE 24VDC SOLENOID VALVES WITH 24VDC CIRCUITS TO THE RRM SOLENOID VALVES FROM FACP.
3. THE FIRE ALARM CONTROL PANEL (FACP) SHALL SUPERVISE THE RRM 24VDC SOLENOID VALVES. THE FACP SHALL PROVIDE BATTERY BACK-UP 24VDC POWER FOR THE RRM UNITS. THE SOLENOID VALVES SHALL BE UL APPROVED LISTED ACTUATORS FOR USE WITH THE FACP. CONTRACTOR SHALL COORDINATE ALL VALVE DETAILS WITH THE FOAM SYSTEM SUPPLIER. CONTRACTOR SHALL MODIFY THE WIRING SCHEME AS SHOWN ON EB-04 TO INSTALL THE RRM 24VDC SOLENOID VALVES.

A FACP AS-BUILTS TO BE PROVIDED BY SIEMENS SEE REQUIRED SUBMITTAL INFORMATION IN REVISIONS TO SUL-0246

REV.	DATE	AS-BUILT MARKUPS	BY
A	10-25-19	AS-BUILT MARKUPS	LHN
1	3-27-15	REVISION TO REMOTE RELEASING MODULES (RRM) (ADD.4)	HGH

THIS DOCUMENT ORIGINALLY ISSUED AND SEALED BY HENRY G. HAWNEY, LICENCE No. 19229 ON 2-6-15.

SEWERAGE AND WATER BOARD OF NEW ORLEANS

CONTRACT No. 1369

HMGP EMERGENCY FUEL STORAGE RETROFIT POWER PLANT
MAIN WATER PURIFICATION PLANT POWER COMPLEX

FIRE ALARM CONTROL PANEL SYSTEM CONFIG. & WIRING DIAGRAM

E

Trigon — Quality ▲ Commitment ▲ Client Service

TRIGON DWG. NO. EB-04

TRIGON ASSOCIATES, LLC
1515 POYDRAS STREET
SUITE 2200
NEW ORLEANS, LA 70112
TEL: 504-585-5767
trigonassociates.com

DR.	S. CLARK
CK:	H. HAWNEY
AP:	H. HAWNEY
LAST EDIT:	
SCALE:	NOT TO SCALE
DATE:	JANUARY 28, 2015

GENERAL SUPERINTENDENT

DWG. No. 12098-W8

SET NO: SHEET NO: 50 OF 72

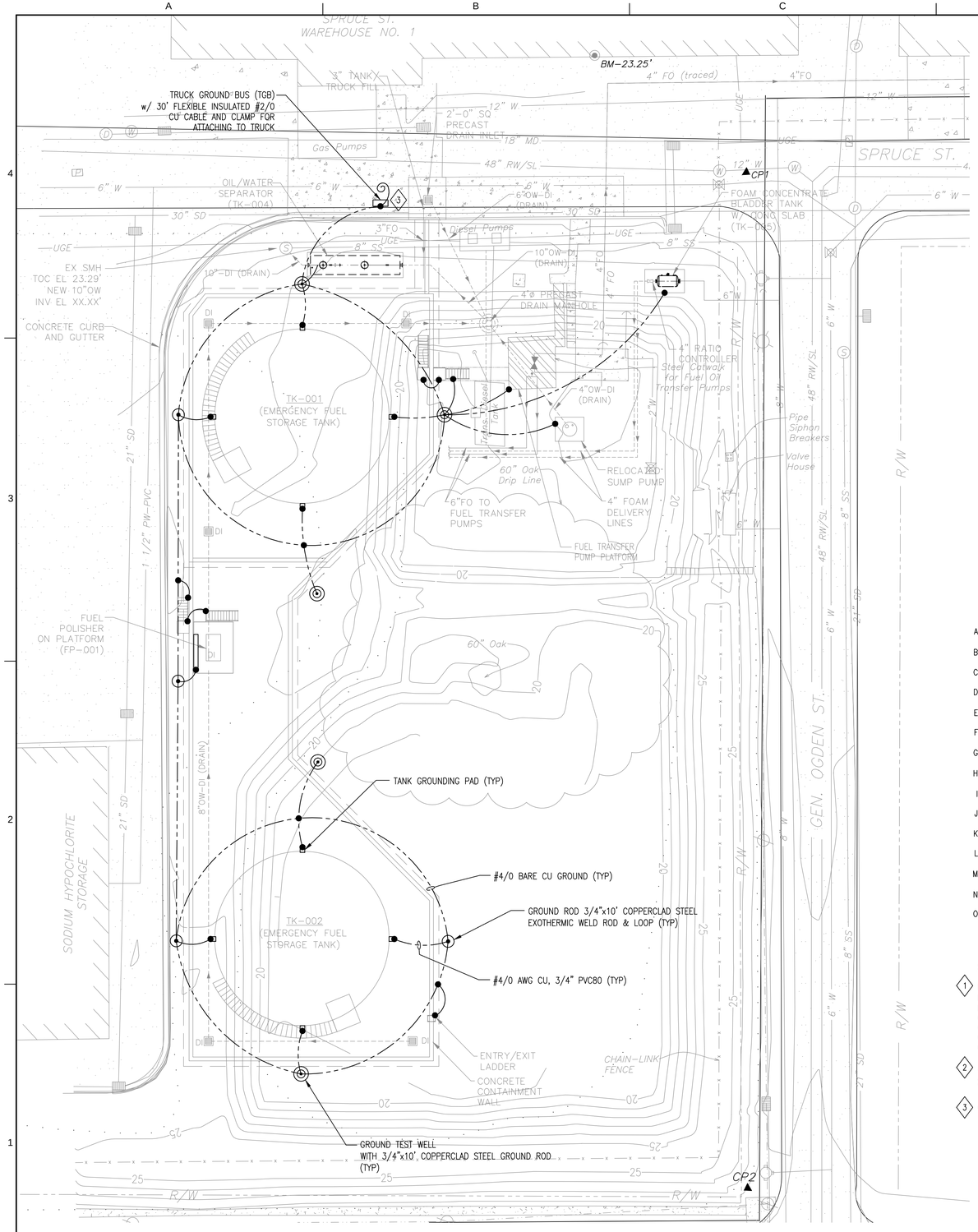

FUEL STORAGE TANKS - GROUNDING PLAN

1 / – PLAN

SCALE: 1"=20'

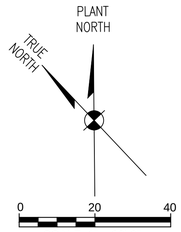

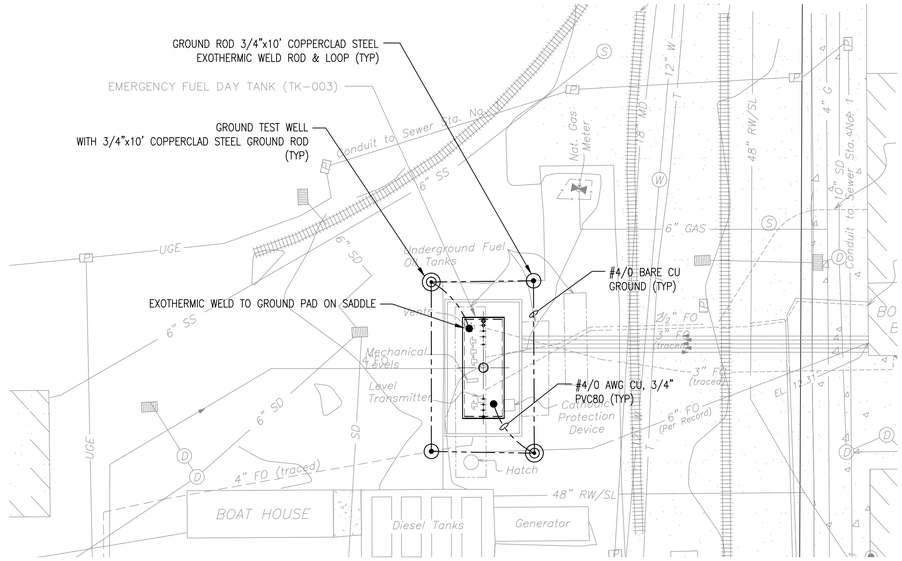

DAY TANK - GROUNDING PLAN

2 / – PLAN

SCALE: 1"=20'

GENERAL NOTES:

A. ALL EXTERIOR CONNECTIONS SHALL BE EXOTHERMIC WELDS.

B. INTERIOR CONNECTIONS SHALL USE CADWELD OR 2-HOLE (COMPRESSION) CONNECTORS FOR WIRES AND APPROVED GROUND CLAMPS FOR PIPES.

C. CONDUIT AND SLEEVES SHALL BE PVC (SCH. 80).

D. NO METALLIC SLEEVES, STRAPS, HANGERS, CLAMPS, ETC. SHALL ENCIRCLE ANY GROUND WIRE IN THE GROUND SYSTEM. USE PVC, NYLON AND FIBERGLASS WHERE POSSIBLE.

E. NO "T" CONNECTIONS (EXCEPT RING GROUND TO ROD) ARE ALLOWED IN ANY GROUND WIRE – USE PARALLEL CONNECTORS.

F. LIMIT THE RUNNING LENGTH OF ANY GROUND WIRE TO 200 FEET.

G. PHOTOGRAPHS OF ALL BURIED CONNECTIONS (TO PIPES, CONDUIT, ETC.), ARE REQUIRED.

H. A "WELDING PERMIT" IS REQUIRED FOR CADWELDING, WELDING ON OR INSIDE THE STRUCTURE.

I. MINIMUM BENDING RADIUS FOR ALL GROUND WIRES IS 12".

J. COAT ALL BOLTED CONNECTIONS WITH ANTI-OXIDANT.

K. BOND ALL METALLIC CONDUITS TO CLOSEST GROUND BUS (-GB) WHERE THEY ENTER A ROOM OR DEDICATED SPACE. USE BURNDY TIN PLATED 'GAR'.

L. RUN GROUNDING CONDUCTOR AS SHORT AND AS STRAIGHT AS POSSIBLE.

M. ALL BENDS AND CURVES SHALL BE TOWARD THE GROUND LOCATION (GROUNDED END) OF CONDUCTOR.

N. GROUNDING CONDUCTORS SHALL BE SECURELY FASTENED AT INTERVALS NOT EXCEEDING 36".

O. TINNED COPPER, TIN PLATED CONNECTORS SHALL BE USED WHEN CONNECTING TO GALVANIZED STEEL.

SPECIFIC NOTES:

1. PROVIDE LIGHTNING PROTECTION SYSTEM (LPS) ON STORAGE TANKS PER SPECIFICATIONS. LIGHTNING PROTECTION SYSTEM (LPS) DOWN CONDUCTORS ARE EXOTHERMICALLY CONNECTED TO 4/0 GROUND LOOP. COORDINATE SYSTEM PROTECTION LOCATION OF DOWN CONDUCTORS, ETC. WITH LPS CONTRACTOR. LPS CONTRACTOR TO COORDINATE GROUNDING CONNECTIONS WITH ELECTRICAL CONTRACTOR SUCH THAT ALL METAL ITEMS ARE BONDED AND ALL OUTSIDE BLDG. STEEL IS GROUNDED AND DESIGN COORDINATED PER NEC AND NFPA STANDARDS. KEEP LPS DOWN CONDUCTORS MINIMUM 6' AWAY FROM ELECTRONIC GEAR. COORDINATE WITH CONTRACTOR.
2. AT STORAGE TANK FACILITY, THERMOWELD INCOMING DUCT BANK GROUND WIRE TO GROUND LOOP. AT OPPOSITE END OF DUCT BANK, BOND DUCT BANK GROUND TO CONDUITS USING TIN PLATED "GAR" CONNECTORS.
3. CONNECT WITH 2 HOLE COMPRESSION CONNECTORS.

LEGEND:

- TGB — TRUCK GROUND BUS, 4"x ¼"x6" TIN PLATED Cu BAR (SEE SPECS)
- EXOTHERMIC CONNECTION
- 2-HOLE UL LISTED COMPRESSION GROUNDING CONNECTOR
- GROUND WIRE
- GROUND ROD: 3/4"x10', COPPER CLAD STEEL, THERMOWELD GROUND LOOP TO ROD
- GROUND TEST WELL WITH GROUND ROD: 3/4"x10', COPPER CLAD STEEL

A LIGHTNING PROTECTION AS-BUILTS PROVIDED BY BONDED VIA SUL-0240

THIS DOCUMENT ORIGINALLY ISSUED AND SEALED BY HENRY G. HAWNEY, LICENCE No. 19229 ON 2-6-15.

E

Trigon — Quality ▲ Commitment ▲ Client Service

TRIGON DWG. NO. EB-05

TRIGON ASSOCIATES, LLC
1515 POYDRAS STREET
SUITE 2200
NEW ORLEANS, LA 70112
TEL: 504-585-5767
trigonassociates.com

REV.	DATE	AS-BUILT MARKUPS	BY
A	10-25-19	AS-BUILT MARKUPS	LHN

SEWERAGE AND WATER BOARD OF NEW ORLEANS

CONTRACT No. 1369

HMGP EMERGENCY FUEL STORAGE RETROFIT POWER PLANT
MAIN WATER PURIFICATION PLANT POWER COMPLEX

FUEL STORAGE & DAY TANKS GROUNDING PLANS

DR:	S. CLARK
CK:	H. HAWNEY
AP:	H. HAWNEY
LAST EDIT:	
SCALE:	1"=20'-0"
DATE:	JANUARY 28, 2015

GENERAL SUPERINTENDENT

DWG. No. 12098-W8

SET NO: SHEET NO: 51 OF 72

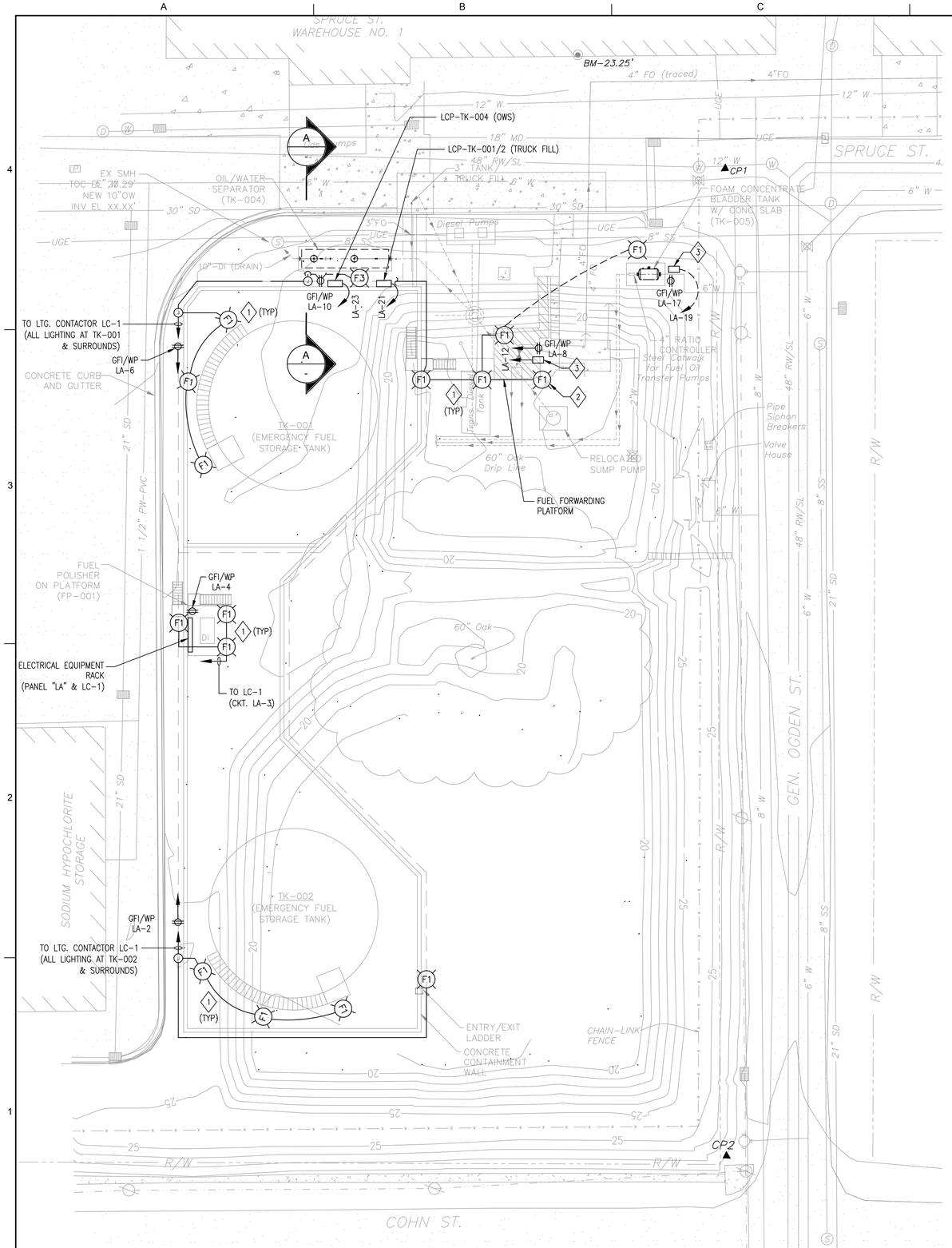

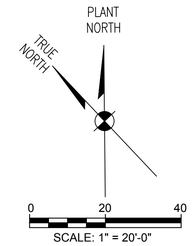

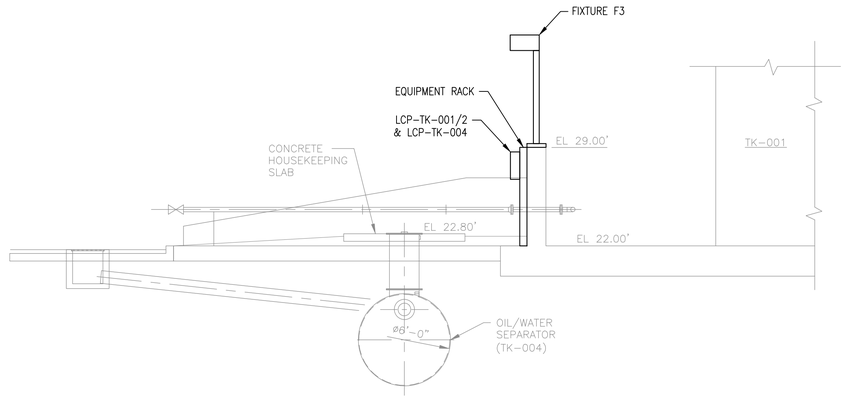

A - **SECTION**
SCALE:1"=5'-0"

GENERAL NOTES:

A CONDUITS SHALL NOT PENETRATE STORAGE TANK FLOOR INSIDE CONTAINMENT AREA. RUN CONDUITS EXPOSED ALONG CONTAINMENT WALLS.

NOTES:

1. FIXTURE F1: WHERE MOUNTED ON PROPOSED EQUIPMENT, CONTRACTOR SHALL COORDINATE WITH HIS SUPPLIERS, TO PROVIDE A MOUNTING BASE PLATE FOR FIXTURE F1. THE ENTIRE ASSEMBLED FIXTURE SUPPORT SHALL BE RATED FOR 150MPH WIND LOAD ON THE FIXTURE.
2. FIXTURE F1: MOUNTED ON EXISTING FUEL FORWARDING PLATFORM: CONTRACTOR SHALL PROVIDE A FIXTURE BASE PLATE, BOLTED TO THE EXISTING STRUCTURE, RATED FOR 150MPH WIND LOAD ON THE FIXTURE.
3. SPARE CIRCUIT: TERMINATE IN NEMA 4X 304SS ENCLOSURE 6"x4"x4".
4. SEE DWG. EZ-03 FOR FIXTURE SCHEDULE.

REV.	DATE		BY
A	10-25-19	AS-BUILT MARKUPS	LHN

A AS-BUILT REVISIONS NOT PROVIDED FOR THIS SHEET BY THE CONTRACTOR

SEWERAGE AND WATER BOARD OF NEW ORLEANS

CONTRACT No. 1369

HMGP EMERGENCY FUEL STORAGE RETROFIT POWER PLANT
MAIN WATER PURIFICATION PLANT POWER COMPLEX

FUEL STORAGE TANKS SITE PLAN LIGHTING & RECEPTACLES

THIS DOCUMENT ORIGINALLY ISSUED AND SEALED BY HENRY G. HAWNEY, LICENCE No. 19229 ON 2-6-15.

E

Trigon — Quality ▲ Commitment ▲ Client Service

TRIGON DWG. NO. EB-06

TRIGON ASSOCIATES, LLC
1515 POYDRAS STREET
SUITE 2200
NEW ORLEANS, LA 70112
TEL: 504-585-5767

trigonassociates.com

DR:	S. CLARK
CK:	H. HAWNEY
AP:	H. HAWNEY
LAST EDIT:	
SCALE:	1"=20'-0"
DATE:	JANUARY 28, 2015

GENERAL SUPERINTENDENT

DWG. No. 12098-W8

SET NO: SHEET NO: 52 OF 72

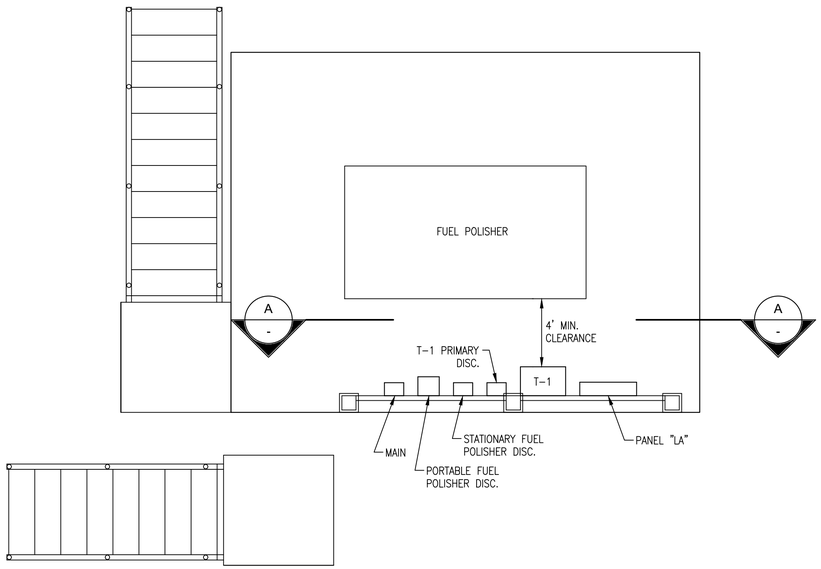

FUEL POLISHER PLATFORM - ENLARGED PLAN

1 — PLAN

SCALE: 3/8"=1'-0"

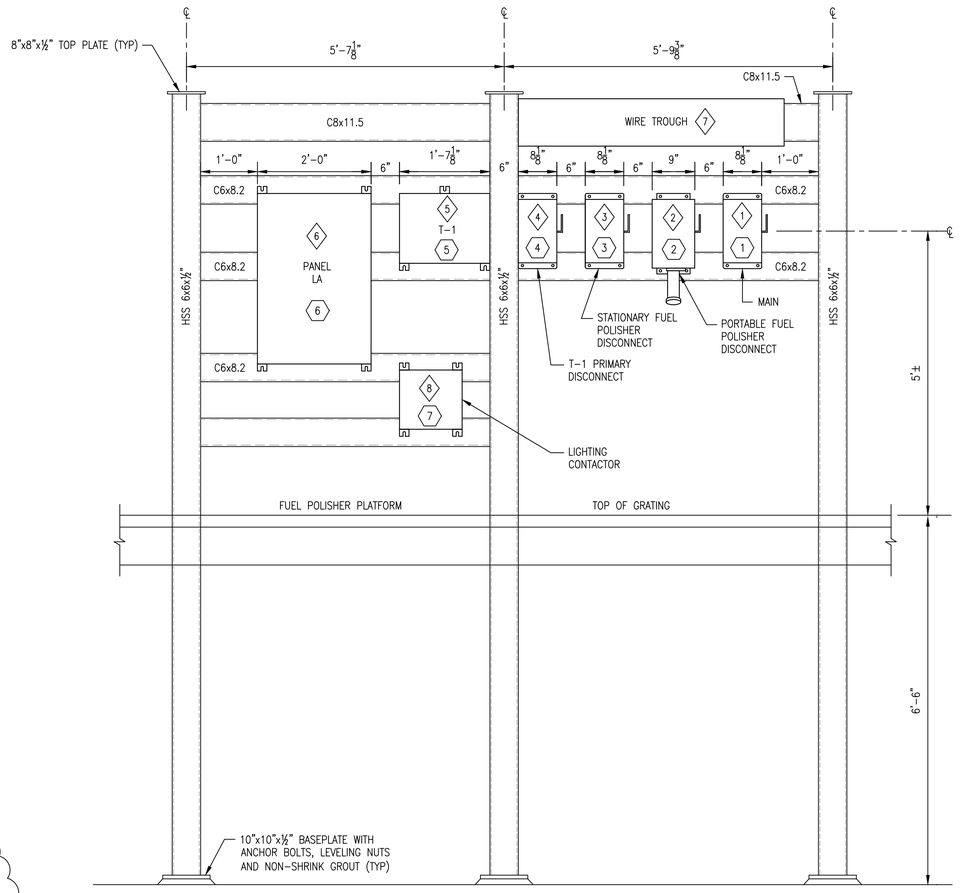

FUEL POLISHER ELECTRICAL EQUIPMENT MOUNTING RACK

A — SECTION

SCALE: 3/4"=1'-0"

NAME PLATE LEGEND:

1. 480V. MAIN DISCONNECT
2. PORTABLE FUEL POLISHER
3. STATIONARY FUEL POLISHER
4. 480V. FDS, TRANSFORMER T-1
5. TRANSFORMER T-1, 9kVA, 120/208V, 3ø, 4W.
6. PANEL LA, 120/208V, 3ø, 4W.
7. LIGHTING CONTACTOR (LC-1) STORAGE TANKS

NOTES:

1. HEAVY DUTY, NON FUSED SAFETY SWITCH, 60A, 600V, 3P, 3W, NEMA 4X, 304SS.
2. HEAVY DUTY, FUSED SAFETY SWITCH, 30A, 600V, 3P, 4W. INTERLOCKED RECEPTACLE, NEMA 4X, 304SS, FUSED, VIEWING WINDOW, AND MATING PLUG.
3. HEAVY DUTY, FUSED SAFETY SWITCH, 30A, 600V, 3P, 3W, NEMA 4X, 304SS.
4. HEAVY DUTY, FUSED SAFETY SWITCH, 30A, 600V, 3P, 3W, NEMA 4X, 304SS.
5. TRANSFORMER, 316SS ENCLOSURE, NEMA 4X, EPOXY ENCAPSULATED.
6. PANELBOARD, NEMA 4X, 304SS ENCLOSURE, 3 POINT LATCHING HANDLE ON DOOR.
7. WIRING TROUGH, 316SS NEMA 4X WITH BOLT-ON GASKETED COVER, SIZE PER NEC.
8. 3 POLE COMBINATION LIGHTING CONTACTOR, H/O/A, 120V. CONTROL TRANSFORMER, 30A, 240V, NEMA 4X, 304SS ENCLOSURE.
9. RACK SHALL BE HOT DIPPED GALVANIZED AFTER FABRICATION.
10. CONTRACTOR SHALL COORDINATE DETAILS WITH PLATFORM SUPPLIER. SEE DRAWING SB-11.

PLAN VIEW AT FLOOR

NOTES:

1. NEMA 3R ALUMINUM ENCLOSURE.
2. PADLOCKABLE HANDLE, 3 POINT LATCH.
3. MAIN BREAKER DISCONNECT: EXTERNALLY MOUNTED OPERATIONS HANDLE ON DRIVE ENCLOSURE DOOR.
4. ACCESS COVER WITH VFD CONTROL COMPONENTS MOUNTED ON OUTSIDE ENCLOSURE DOOR UNDER THE COVER. MOUNT CONTROL SWITCHES, PILOT LIGHTS, SUCH AS LOCAL/REMOTE, SELECTOR SWITCH, START/STOP PUSHBUTTONS, AND SPEED POT.
5. ENCLOSURE PAINT COATING-MANUFACTURER'S STANADARD GENERALLY AS FOLLOWS:
   a. PRIMER
   b. ELECTROSTATICALLY APPLIED DRY POLYESTER POWDER COATING - WHITE COLOR.

FOAM TANK BOOSTER PUMP - ~~VFD DRIVE~~ ENCLOSURE

N.T.S.

A FOAM TANK BOOSTER PUMP WAS REPLACED WITH NEMA 4X STARTER PER HAND SKETCHED SCHEMATIC SUBMITTED BY RED GROUP VIA SUL-0244.A

REV.	DATE		BY
A	10-25-19	AS-BUILT MARKUPS	LHN

SEWERAGE AND WATER BOARD OF NEW ORLEANS

CONTRACT No. 1369

HMGP EMERGENCY FUEL STORAGE
RETROFIT POWER PLANT
MAIN WATER PURIFICATION PLANT POWER COMPLEX

FUEL POLISHER PLATFORM LAYOUT
FOAM TANK BOOSTER PUMP

THIS DOCUMENT ORIGINALLY ISSUED AND SEALED BY HENRY G. HAWNEY, LICENCE No. 19229 ON 2-6-15.

Trigon — Quality ▲ Commitment ▲ Client Service

TRIGON ASSOCIATES, LLC
1515 POYDRAS STREET
SUITE 2200
NEW ORLEANS, LA 70112
TEL: 504-585-5767

trigonassociates.com

TRIGON DWG. NO. EB-07

DR:	S. CLARK
CK:	H. HAWNEY
AP:	H. HAWNEY
LAST EDIT:	
SCALE:	NOT TO SCALE
DATE:	JANUARY 28, 2015

GENERAL SUPERINTENDENT

DWG. No. 12098-W8

SET NO: SHEET NO: 53 OF 72

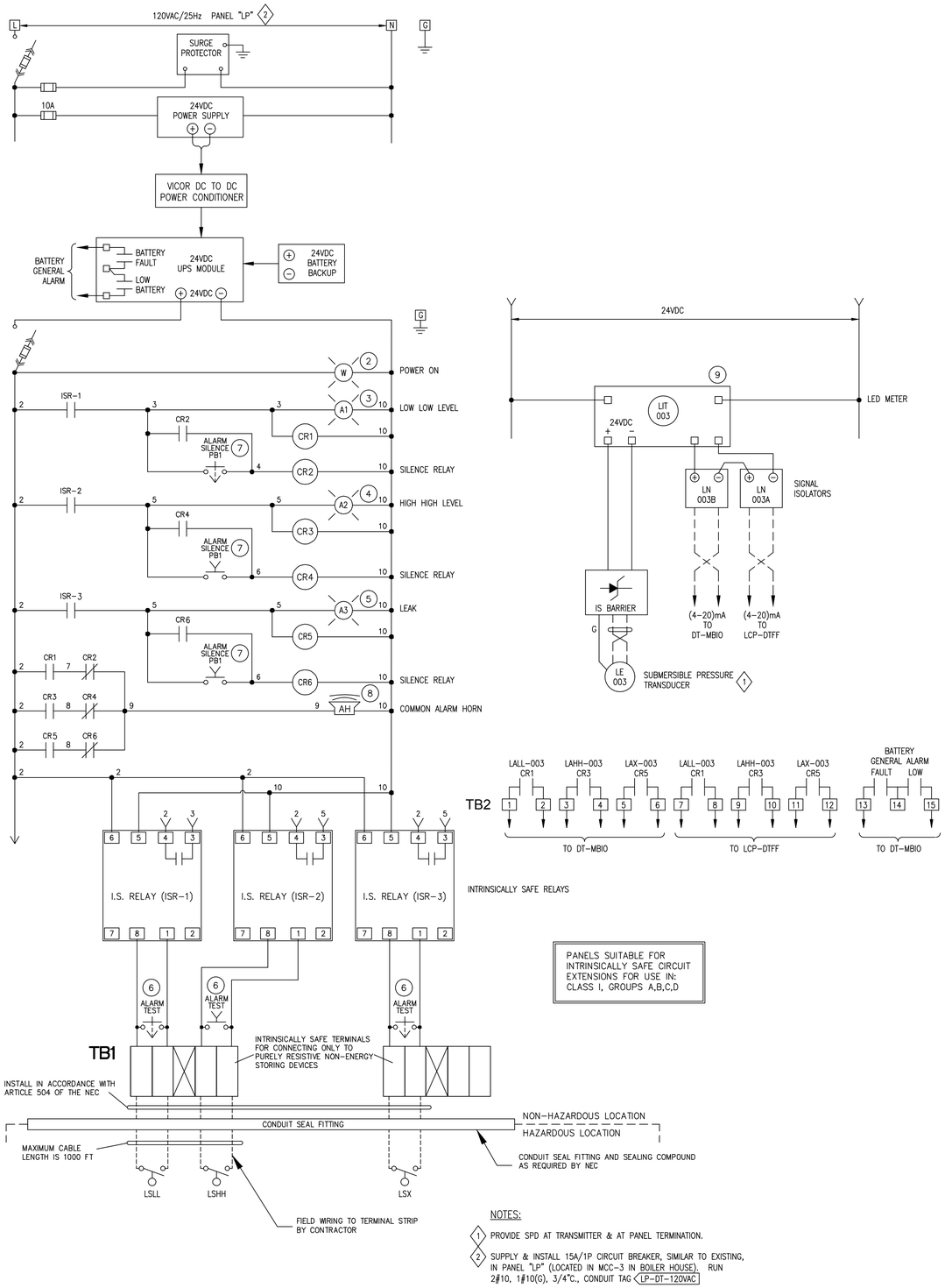

INTRINSICALLY SAFE RELAYS

PANELS SUITABLE FOR INTRINSICALLY SAFE CIRCUIT EXTENSIONS FOR USE IN: CLASS I, GROUPS A,B,C,D

NOTES:

1. PROVIDE SPD AT TRANSMITTER & AT PANEL TERMINATION.
2. SUPPLY & INSTALL 15A/1P CIRCUIT BREAKER, SIMILAR TO EXISTING, IN PANEL "LP" (LOCATED IN MCC-3 IN BOILER HOUSE). RUN 2#10, 1#10(G), 3/4"C., CONDUIT TAG LP-DT-120VAC

DAY TANK LOCAL CONTROL PANEL (LCP-TK-003)

1 SCHEMATIC

NTS

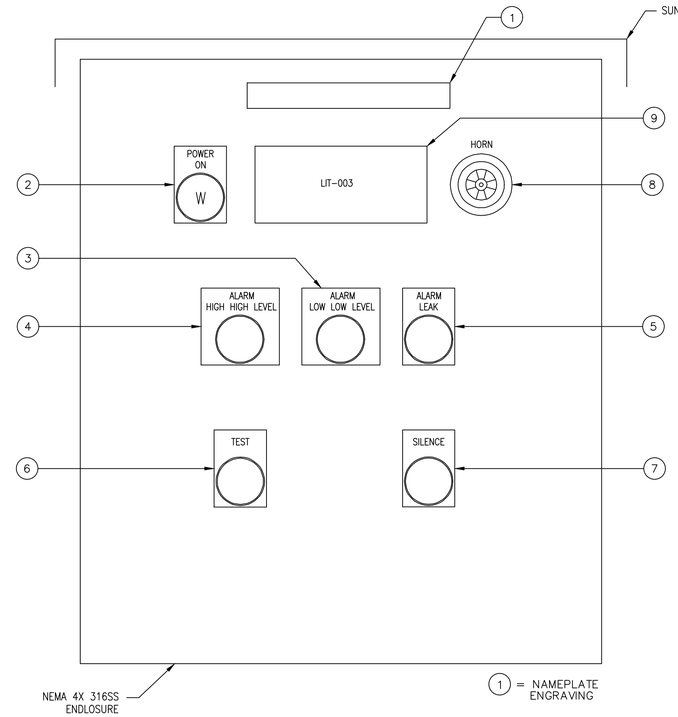

1 DAY TANK LOCAL CONTROL PANEL (LCP-TK-003)

A DIAGRAM

NTS

GENERAL NOTES:

A FOR CONTROL PANEL COMPONENTS, SEE SPECIFICATION SECTION 26 61 00.

A CONTROL PANEL AS-BUILTS PROVIDED BY RED GROUP VIA SUL-0244

THIS DOCUMENT ORIGINALLY ISSUED AND SEALED BY HENRY G. HAWNEY, LICENCE No. 19229 ON 2-6-15.

REV.	DATE		BY
A	10-25-19	AS-BUILT MARKUPS	LHN

SEWERAGE AND WATER BOARD OF NEW ORLEANS

CONTRACT No. 1369

HMGP EMERGENCY FUEL STORAGE
RETROFIT POWER PLANT
MAIN WATER PURIFICATION PLANT POWER COMPLEX

DAY TANK SCHEMATIC & LOCAL CONTROL PANEL

TRIGON ASSOCIATES, LLC
1515 POYDRAS STREET
SUITE 2200
NEW ORLEANS, LA 70112
TEL: 504-585-5767
trigonassociates.com

Trigon — Quality ▲ Commitment ▲ Client Service

TRIGON DWG. NO. EC-01

DR:	S. CLARK
CK:	H. HAWNEY
AP:	H. HAWNEY
LAST EDIT:	
SCALE:	NOT TO SCALE
DATE:	JANUARY 28, 2015

GENERAL SUPERINTENDENT

DWG. No. 12098-W8

SET NO: SHEET NO: 54 OF 72

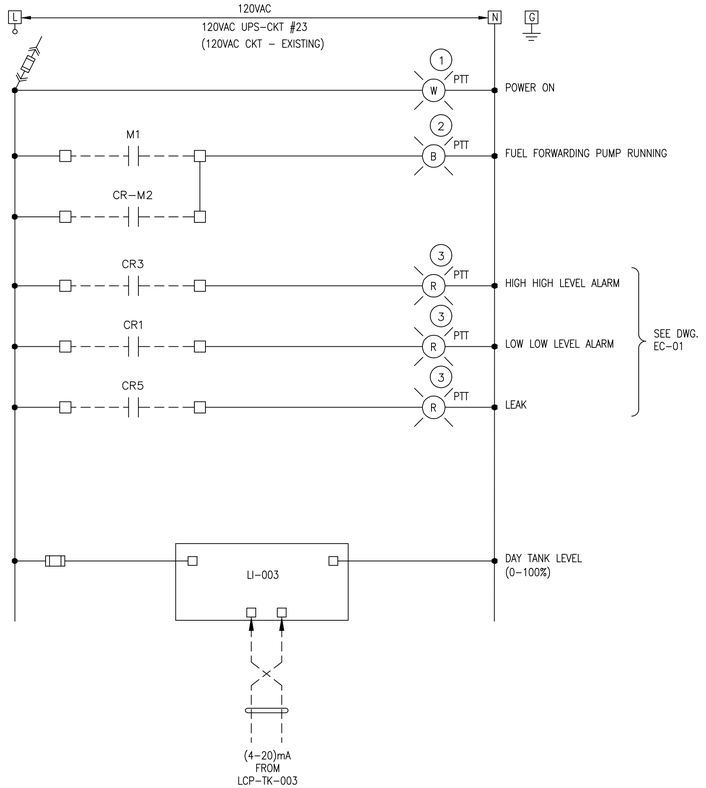

LOCAL CONTROL PANEL - DAY TANK & FUEL FORWARDING PUMPS (LCP-DTFF)

1 SCHEMATIC
– NTS

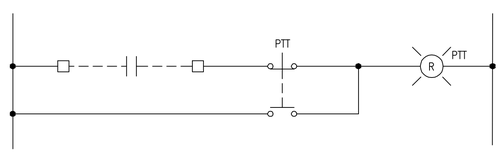

PTT SCHEMATIC - TYPICAL ALL PTT PILOT LIGHTS

2 SCHEMATIC
– NTS

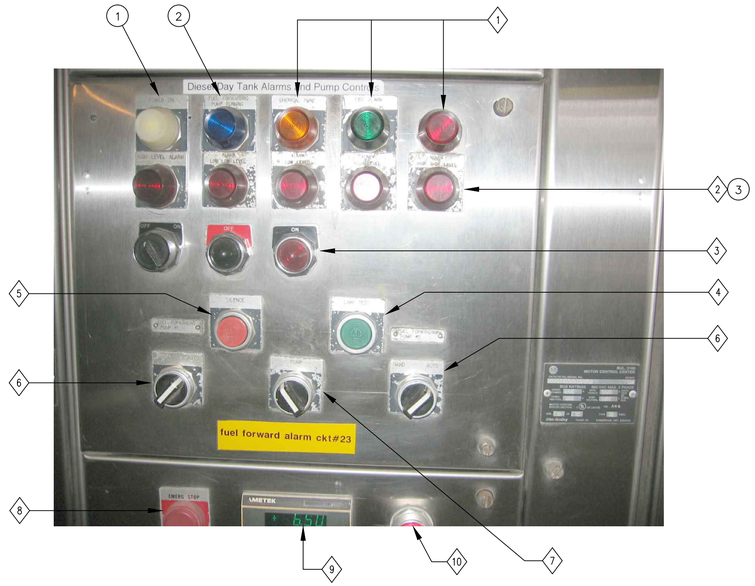

LOCAL CONTROL PANEL - DAY TANK (LCP-DTFF): MODIFICATIONS

A DETAIL
– NTS

GENERAL NOTES:

A. PRIOR TO PERFORMING ANY WORK, CONTRACTOR SHALL TRACE OUT ALL EXISTING CONTROL WIRING & GENERATE A DRAWING SHOWING EXISTING CONDITIONS. CONSULT WITH ENGINEER BEFORE PROCEEDING TO MODIFY THE PANEL.

B. PILOT LIGHTS: REPLACE ALL PILOT LIGHTS WITH LED TYPE, NEMA 4, PUSH TO TEST, A-B #800H.

SPECIFIC NOTES:

1. CONTRACTOR TO FIELD DETERMINE THE INITIATING SIGNAL FOR PILOT LIGHTS. IF INITIATING SIGNAL EQUIPMENT IS NOT IN USE, REMOVE PILOT LIGHTS, WIRING, & COVER WITH A BLANK FILLER PLATE.
2. LEVEL PILOT LIGHTS:
REPLACE THE HIGH HIGH LEVEL AND LOW LOW LEVEL PILOT LIGHTS WITH LED, PTT TYPE. REMOVE THE REMAINING PILOT LIGHTS, ASSOCIATED WIRING & COVER WITH A BLANK FILLER PLATE.
3. OFF/ON & PILOT LIGHTS:
THESE ITEMS ARE CURRENTLY USED FOR CHEMICAL FUEL ADDITIVE AND SHALL REMAIN.
4. LAMP TEST:
REMOVE AND COVER WITH A BLANK FILLER PLATE.
5. SILENCE:
REMOVE THIS PUSH BUTTON & COVER WITH A BLANK FILLER PLATE.
6. FUEL FORWARDING PUMP 1, PUMP 2 HAND/AUTO:
REPLACE SWITCH AND NAMEPLATE WITH HAND/OFF/COMP, 3 POSITION SELECTOR SWITCH, SPRING RETURN FROM HAND TO OFF, ALLEN BRADLEY 800H.
7. PUMP 1/PUMP 2 SELECTOR SWITCH:
SELECTOR SWITCH TO REMAIN. ADD CONTACT BLOCKS AS REQUIRED.
8. EMERGENCY STOP:
REPLACE WITH MUSHROOM HEAD E-STOP, PUSH/PULL, ALLEN BRADLEY 800H.
9. DAY TANK LEVEL INDICATOR LI-003:
REUSE THE INDICATOR. PROVIDE A FULL NAMEPLATE WITH DESCRIPTION AND TAG NUMBER.
10. RESET PILOT LIGHT:
CONTRACTOR TO FIELD INVESTIGATE FUNCTION. CONSULT WITH ENGINEER IF LIGHT SHOULD BE LEFT IN PLACE OR REMOVED.

REV.	DATE		BY
A	10-25-19	AS-BUILT MARKUPS	LHN

SEWERAGE AND WATER BOARD OF NEW ORLEANS

CONTRACT No. 1369

HMGP EMERGENCY FUEL STORAGE
RETROFIT POWER PLANT
MAIN WATER PURIFICATION PLANT POWER COMPLEX

DAY TANK SCHEMATIC & LOCAL CONTROL PANEL

A CONTROL PANEL AS-BUILTS PROVIDED BY RED GROUP VIA SUL-0244

THIS DOCUMENT ORIGINALLY ISSUED AND SEALED BY HENRY G. HAWNEY, LICENCE No. 19229 ON 2-6-15.

TRIGON ASSOCIATES, LLC
1515 POYDRAS STREET
SUITE 2200
NEW ORLEANS, LA 70112
TEL: 504-585-5767
trigonassociates.com

Trigon
Quality ▲ Commitment ▲ Client Service

TRIGON DWG. NO. EC-02

DR:	S. CLARK
CK:	H. HAWNEY
AP:	H. HAWNEY
LAST EDIT:	
SCALE:	NOT TO SCALE
DATE:	JANUARY 28, 2015

GENERAL SUPERINTENDENT

DWG. No. 12098-W8

SET NO: SHEET NO: 55 OF 72

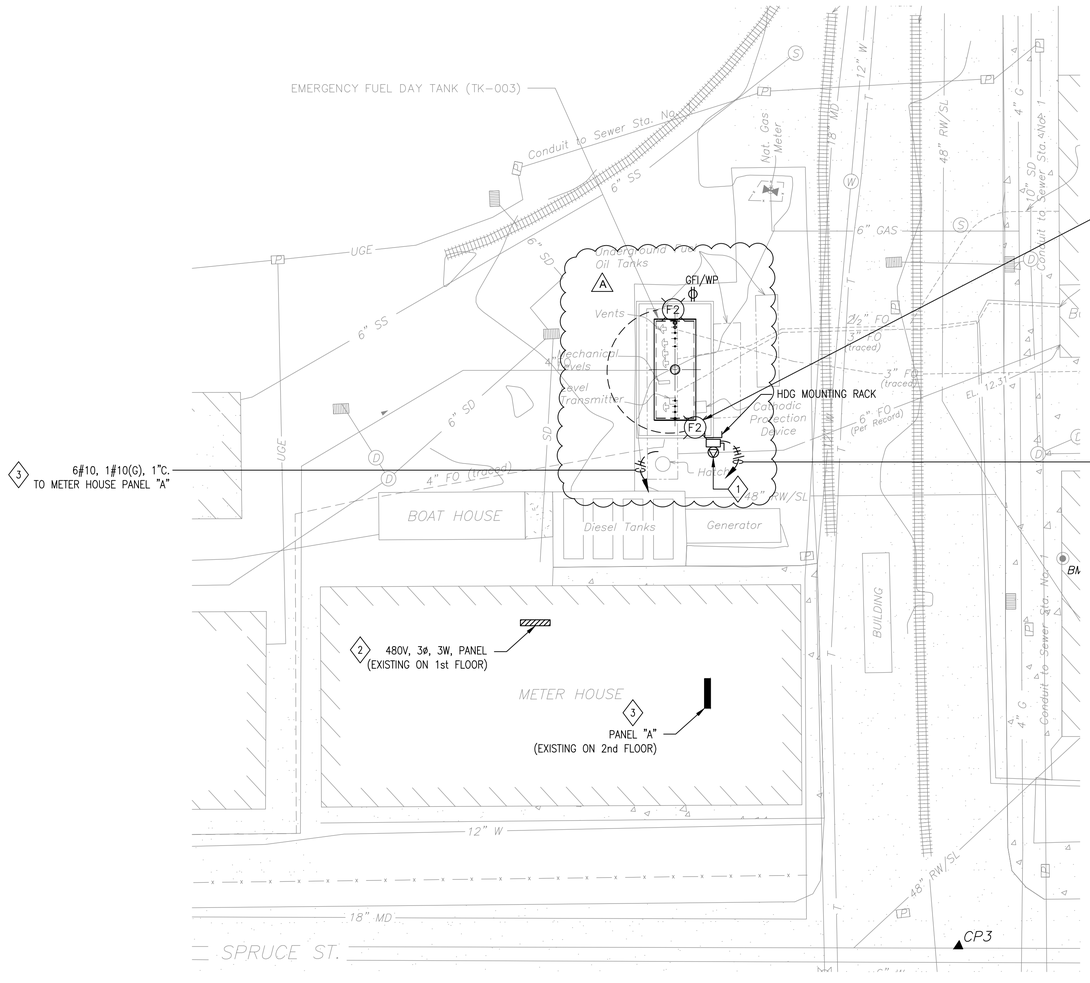

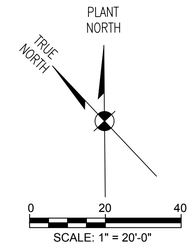

NOTES:

1. 30A, 3P, 4W, INTERLOCKED RECEPTACLE, HP RATED (7½HP), NEMA 4X 304SS, FUSED, VIEWING WINDOW, CROUSE HINDS WSRDW3352 SM S901, WITH MATING 3W, 4P PLUG, CROUSE HINDS APJ3485 OR EQUAL.
2. 480V, 3ø, 3W. PANEL: (EXISTING): SQ-D, I LINE, HCM CAT# 2347-4. INSTALL 30A/3P, 480V, CIRCUIT BREAKER IN PANEL FOR 480V. RECEPTACLE AT DAY TANK. RECEPTACLE IS FOR PORTABLE FUEL POLISHER.
3. INSTALL 3-20A/1P BREAKERS IN PANEL "A" TO MATCH EXISTING. RUN 1 CIRCUIT FOR DRY TANK LIGHTING. RUN 1 CIRCUIT AS SPARE TO DAY TANK LCP MOUNTING RACK. TERMINATE THE SPARE CIRCUIT IN 6"x4"x4" NEMA 4X, 304SS ENCLOSURE. RUN 1 CIRCUIT TO GFI/WP RECEPTACLE. RUN UNDERGROUND FROM METER HOUSE. ROUTE UNDERGROUND AROUND EXISTING EQUIPMENT.
4. FOR FIXTURE SCHEDULE, SEE DWG. EZ-03.

REV.	DATE	AS-BUILT MARKUPS	BY
A	10-25-19	AS-BUILT MARKUPS	LHN

SEWERAGE AND WATER BOARD OF NEW ORLEANS

CONTRACT No. 1369

HMGP EMERGENCY FUEL STORAGE
RETROFIT POWER PLANT
MAIN WATER PURIFICATION PLANT POWER COMPLEX

DAY TANK ELECTRICAL SITE PLAN

THIS DOCUMENT ORIGINALLY ISSUED AND SEALED BY HENRY G. HAWNEY, LICENCE No. 19229 ON 2-6-15.

E

Trigon
Quality ▲ Commitment ▲ Client Service

TRIGON DWG. NO. EC-03

TRIGON ASSOCIATES, LLC
1515 POYDRAS STREET
SUITE 2200
NEW ORLEANS, LA 70112
TEL: 504-585-5767

trigonassociates.com

DR:	S. CLARK
CK:	H. HAWNEY
AP:	H. HAWNEY
LAST EDIT:	
SCALE:	1"=20'-0"
DATE:	JANUARY 28, 2015

GENERAL SUPERINTENDENT

DWG. No. 12098-W8

SET NO: SHEET NO: 56 OF 72

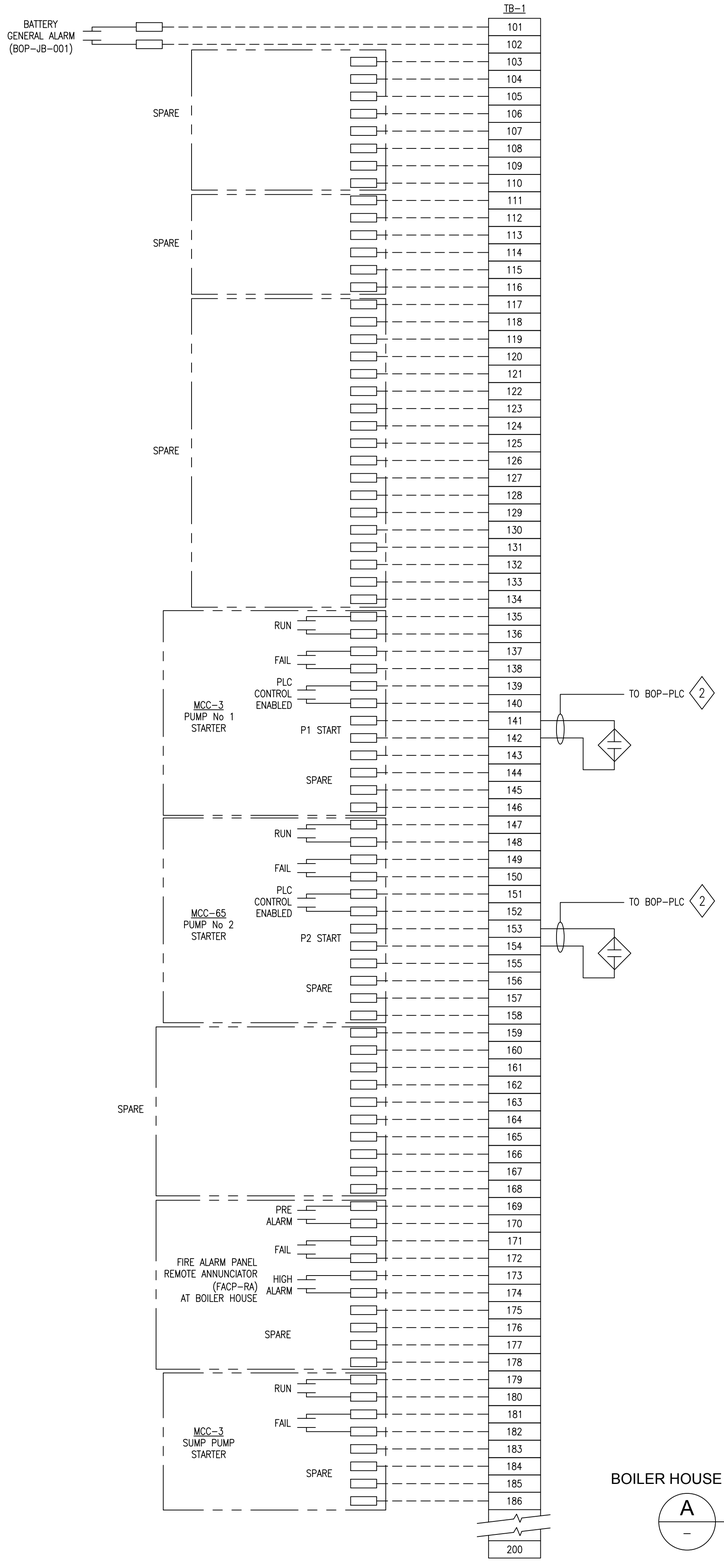

BOILER HOUSE JUNCTION BOX #1 (BOP-JB-001)

A – WIRING DIAGRAM

NTS

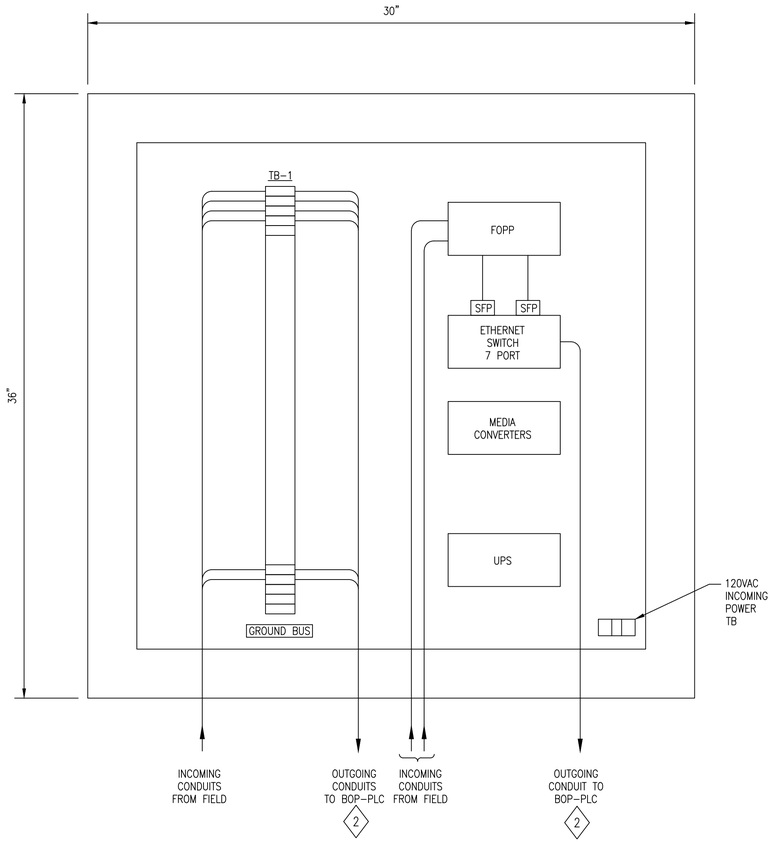

BOILER HOUSE JUNCTION BOX #1 (BOP-JB-001)

1 – DETAIL

NTS

NOTES:

1. BOP-JB-001: NEMA 4X, 304SS, 36"H x 30"W x 10"D, 3 POINT LATCH, HOFFMAN CAT # A36H3010SS6LP3PT OR EQUAL.
2. SEE PROJECT CP1370 FOR INTERCONNECTION TO BOP-JB-001.

REV.	DATE	AS-BUILT MARKUPS	BY
A	10-25-19	AS-BUILT MARKUPS	LHN

A AS-BUILT REVISIONS NOT PROVIDED FOR THIS SHEET BY THE CONTRACTOR

THIS DOCUMENT ORIGINALLY ISSUED AND SEALED BY HENRY G. HAWNEY, LICENCE No. 19229 ON 2-6-15.

SEWERAGE AND WATER BOARD OF NEW ORLEANS

CONTRACT No. 1369

HMGP EMERGENCY FUEL STORAGE RETROFIT POWER PLANT
MAIN WATER PURIFICATION PLANT POWER COMPLEX

BOILER HOUSE JB #1 (BOP-JB-001) WIRING DIAGRAM

E

Trigon
Quality ▲ Commitment ▲ Client Service

TRIGON DWG. NO. EC-04

TRIGON ASSOCIATES, LLC
1515 POYDRAS STREET
SUITE 2200
NEW ORLEANS, LA 70112
TEL: 504-585-5767
trigonassociates.com

DR:	S. CLARK
CK:	H. HAWNEY
AP:	H. HAWNEY
LAST EDIT:	
SCALE:	NOT TO SCALE
DATE:	JANUARY 28, 2015

GENERAL SUPERINTENDENT

DWG. No. 12098-W8

SET NO: SHEET NO: 57 OF 72

LEGEND

FOPP: FIBER OPTIC PATCH PANEL
SFP: SMALL FORM FACTOR PLUGGABLE

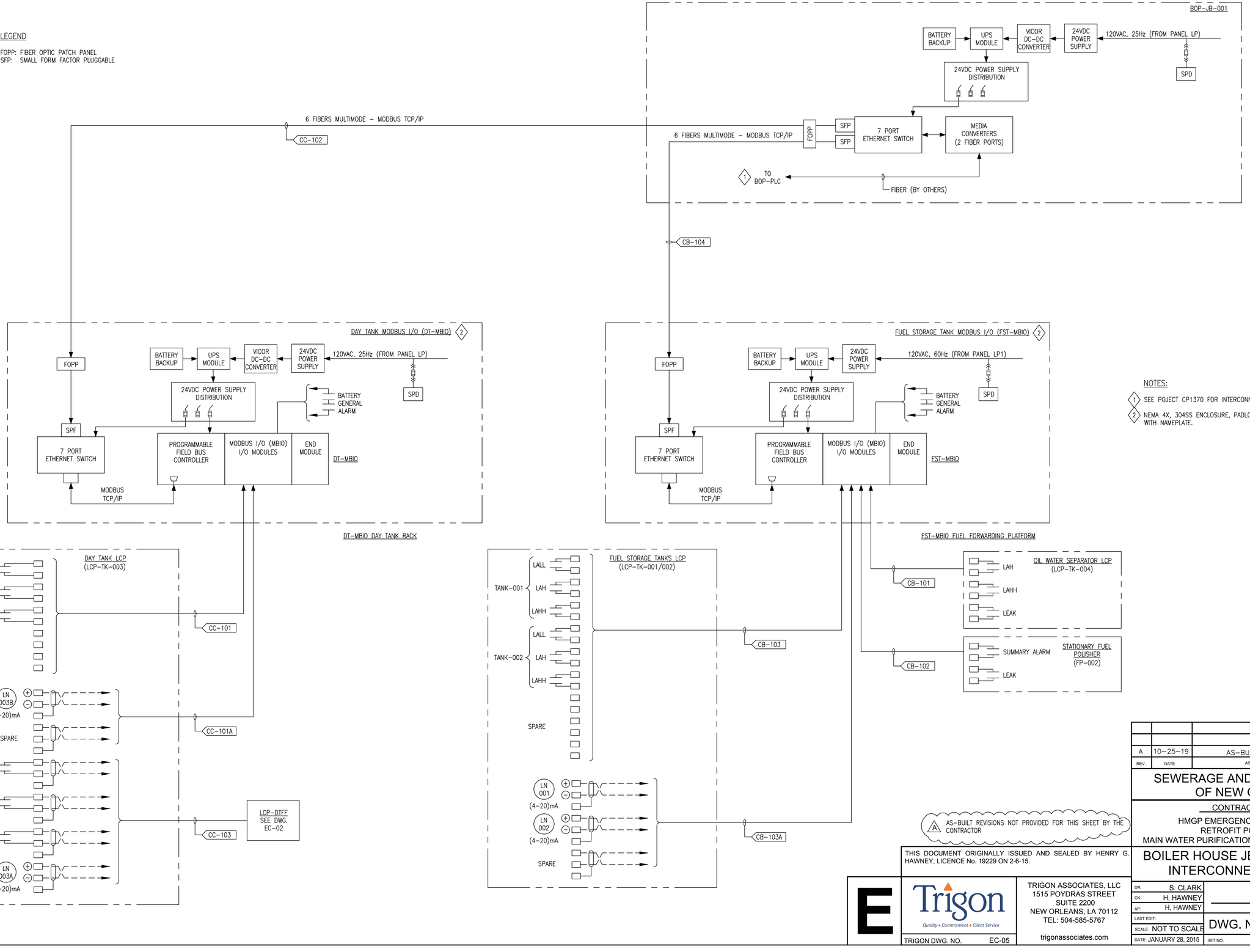

NOTES:

1. SEE POJECT CP1370 FOR INTERCONNECTION TO BOP-JB-001.
2. NEMA 4X, 304SS ENCLOSURE, PADLOCKABLE HANDLE, 3 POINT LATCH, WITH NAMEPLATE.

A AS-BUILT REVISIONS NOT PROVIDED FOR THIS SHEET BY THE CONTRACTOR

THIS DOCUMENT ORIGINALLY ISSUED AND SEALED BY HENRY G. HAWNEY, LICENCE No. 19229 ON 2-6-15.

REV.	DATE		BY
A	10-25-19	AS-BUILT MARKUPS	LHN

SEWERAGE AND WATER BOARD OF NEW ORLEANS

CONTRACT No. 1369

HMGP EMERGENCY FUEL STORAGE
RETROFIT POWER PLANT
MAIN WATER PURIFICATION PLANT POWER COMPLEX

BOILER HOUSE JB #1 (BOP-JB-001) INTERCONNECT DIAGRAM

TRIGON ASSOCIATES, LLC
1515 POYDRAS STREET
SUITE 2200
NEW ORLEANS, LA 70112
TEL: 504-585-5767
trigonassociates.com

Trigon — Quality ▲ Commitment ▲ Client Service

TRIGON DWG. NO. EC-05

DR.	S. CLARK
CK:	H. HAWNEY
AP:	H. HAWNEY
LAST EDIT:	
SCALE:	NOT TO SCALE
DATE:	JANUARY 28, 2015

GENERAL SUPERINTENDENT

DWG. No. 12098-W8

SET NO: SHEET NO: 58 OF 72



EMERGENCY FUEL TANKS

TYPICAL SECTION

SCALE:1/8"=1'-0"

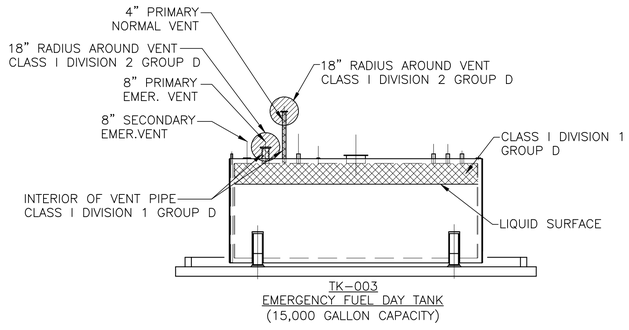

DAY TANK

TYPICAL SECTION

SCALE:1/8"=1'-0"

AREA CLASSIFICATION NOTES:

1. CLASSIFIED AREAS ARE HATCHED AND NOTED.
2. UNCLASSIFIED AREAS ARE UNHATCHED.

LEGEND

- CLASS 1, DIVISION 1, GROUP D
- CLASS 1, DIVISION 2, GROUP D
- UNCLASSIFIED

REV.	DATE		BY
A	10-25-19	AS-BUILT MARKUPS	LHN

SEWERAGE AND WATER BOARD OF NEW ORLEANS

CONTRACT No. 1369

HMGP EMERGENCY FUEL STORAGE
RETROFIT POWER PLANT
MAIN WATER PURIFICATION PLANT POWER COMPLEX

FUEL STORAGE TANKS / DAY TANK AREA CLASSIFICATION

A AS-BUILT REVISIONS NOT PROVIDED FOR THIS SHEET BY THE CONTRACTOR

THIS DOCUMENT ORIGINALLY ISSUED AND SEALED BY HENRY G. HAWNEY, LICENCE No. 19229 ON 2-6-15.

E

Trigon
Quality ▲ Commitment ▲ Client Service

TRIGON DWG. NO. EZ-01

TRIGON ASSOCIATES, LLC
1515 POYDRAS STREET
SUITE 2200
NEW ORLEANS, LA 70112
TEL: 504-585-5767

trigonassociates.com

DR.	SI CLARK
CK:	LH NAGRATH
AP:	H. HAWNEY
LAST EDIT:	
SCALE:	AS NOTED
DATE:	JANUARY 28, 2015

GENERAL SUPERINTENDENT

DWG. No. 12098-W8

SET NO: SHEET NO: 59 OF 72

CONDUIT/CABLE SCHEDULE

CABLE		CONDUIT		FUNCTION	FROM	TO	ROUTE	REMARKS
TAG NO.	CONDUCTORS	TAG NO.	SIZE					
PMH-101	3-1/C#2, 1-1/C#6(G)	PMH-101	2" X 2	480V. POWER	MUD HOUSE MCC	FUEL STORAGE TANKS MAIN DISC. SWITCH	U/G & EXPOSED	RUN 1-2"C. SPARE CONDUIT FROM MUD HOUSE MCC (G3) TO PULL BOX PPB-G3-001A.
PMH-101A	3-1/C#2, 1-1/C#6(G)	PMH-101A	1½"	480V. POWER	FUEL STORAGE TANKS MAIN DISC. SWITCH	WIRE TROUGH	EXPOSED	–
–	–	–	–	–	–	–	–	–
P-101	3-1/C#10, 1-1/C#10(G)	P-101	3/4"	480V. POWER	WIRE TROUGH	PORTABLE FUEL POLISHER DISC. SWITCH	EXPOSED	–
P-102	3-1/C#10, 1-1/C#10(G)	P-102	3/4"	480V. POWER	WIRE TROUGH	STATIONARY FUEL POLISHER DISC. SWITCH	EXPOSED	–
P-102A	3-1/C#10, 1-1/C#10(G)	P-102A	3/4"	480V. POWER	STATIONARY FUEL POLISHER DISC. SWITCH	STATIONARY FUEL POLISHER	EXPOSED	–
P-103	3-1/C#10, 1-1/C#10(G)	P-103	3/4"	480V. POWER	WIRE TROUGH	TRANSFORMER T-1 PRIMARY DISC. SWITCH	EXPOSED	–
P-103A	3-1/C#12, 1-1/C#12(G)	P-103A	3/4"	480V. POWER	TRANSFORMER T-1 PRIMARY DISC. SWITCH	TRANSFORMER T-1	EXPOSED	–
P-103B	4-1/C#8, 1-1/C#8(G)	P-103B	1"	208/120V. POWER	TRANSFORMER T-1	PANEL "LP"	EXPOSED	–
P3-101	3-1/C#4, 1-1/C#8(G)	P3-101	1¼"	208V. POWER	MCC-3	FUEL FORWARDING PUMP No. 1	U/G & EXPOSED	–
P3-102	3-1/C#2, 1-1/C#6	P3-102	2½"	208V. POWER	MCC-3	SUMP PUMP	U/G & EXPOSED	FOAM BOOSTER –
P3-103	3-1/C#2, 1-1/C#6 (A)	P3-103	2½"	208V. POWER	MCC G3/G4 (A)	FOAM BOOSTER PUMP STARTER (A)	U/G & EXPOSED	–
P3-103A	1-3/C#1, WITH GROUND	P3-103A	2½"	208V. POWER	FOAM BOOSTER PUMP STARTER	BOOSTER PUMP	U/G & EXPOSED	SERVICE WIRE VFD CABLE (XHHW-2) (3)
P3-104	EMPTY	P3-104	2½"	POWER	MCC-3	FUEL FORWARDING PLATFORM	U/G & EXPOSED	SPARE CONDUIT
P5-101	3-1/C#10, 1-1/C#10(G)	P5-101	3/4"	440V. POWER	MCC-5	FUEL FORWARDING PUMP No. 2	U/G & EXPOSED	–
C3-101	1-8/C#10 (7#10, 1#10G)	C3-101	1"	CONTROL	MCC-3	FUEL FORWARDING PUMP No. 1	U/G & EXPOSED	START/STOP, L/R (3#10 SPARE)
C3-101A	8-1/C#14, 1-1/C#12(G)	C3-101A	3/4"	CONTROL	MCC-3	LCP-DTFF	EXPOSED	3#14 SPARE
C3-101B	12-1/C#14, 1-1/C#12(G)	C3-101B	3/4"	CONTROL	MCC-3 (FUEL FORWARDING PUMP No. 1)	BOP-JB-001	EXPOSED	4#14 SPARE
C3-102	1-8/C#10 (7#10, 1#10G)	C3-102	1"	CONTROL	MCC-3	SUMP PUMP	U/G & EXPOSED	LSL/LSH (4#12 SPARE)
C3-102A	8-1/C#14, 1-1/C#12(G)	C3-102A	3/4"	CONTROL	MCC-3 (SUMP PUMP)	BOP-JB-001	EXPOSED	4#14 SPARE
C3-103	2-1/C#12, 1-1/C#12(G)	C3-103	3/4"	120V.	FOAM TANK BOOSTER PUMP VFD	BOOSTER PUMP	U/G & EXPOSED	SPACE HEATER
C5-101	1-8/C#10 (7#10, 1#10G)	C5-101	1"	CONTROL	MCC-G5	FUEL FORWARDING PUMP No. 2	U/G & EXPOSED	START/STOP, L/R (3#10 SPARE)
C5-101A	8-1/C#10, 1-1/C#10(G)	C5-101A	1"	CONTROL	MCC-G5	LCP-DTFF	EXPOSED	3#12 SPARE
C5-101B	12-1/C#14, 1-1/C#12(G)	C5-101B	3/4"	CONTROL	MCC-G5 (FUEL FORWARDING PUMP No. 2)	BOP-JB-001	EXPOSED	4#14 SPARE
CB-101	10-1/C#14, 1-1/C#12(G)	CB-101	3/4"	SIGNAL	OWS LCP-TK-004	FST-MBIO	U/G & EXPOSED	(4#14 SPARE)
CB-101A	8-1/C#14, 1-1/C#12(G)	CB-101A	3/4"	CONTROL	OWS LCP-TK-004	TANK LEVEL SWITCHES	U/G & EXPOSED	(2#14 SPARE) INTRINSICALLY SAFE CIRCUITS
CB-102	6-1/C#14, 1-1/C#12(G)	CB-102	3/4"	SIGNAL	STATIONARY FUEL POLISHER	FST-MBIO	U/G & EXPOSED	(2#14 SPARE)
CB-103	18-1/C#14, 1-1/C#12(G)	CB-103	1"	SIGNAL	FUEL TANKS LCP-TK-001/002	FST-MBIO	U/G & EXPOSED	(6#14 SPARE)
CB-103A	3-TW PR SH #18 AWG	CB-103A	1"	SIGNAL	FUEL TANKS LCP-TK-001/002	FST-MBIO	U/G & EXPOSED	(1 TW PR SH SPARE)
CB-103B	8-1/C#14, 1-1/C#12(G)	CB-103B	3/4"	CONTROL	LCP-TK-001/2	TANK #001 LEVEL SWITCHES	EXPOSED	(2#14 SPARE) INTRINSICALLY SAFE CIRCUITS
CB-103C	1-TW PR SH #18 AWG	CB-103C	3/4"	CONTROL	LCP-TK-001/2	TANK #001 LIT-001	EXPOSED	INTRINSICALLY SAFE CIRCUIT
CB-103D	8-1/C#14, 1-1/C#12(G)	CB-103D	3/4"	CONTROL	LCP-TK-001/2	TANK #002 LEVEL SWITCHES	EXPOSED	(2#14 SPARE) INTRINSICALLY SAFE CIRCUITS
CB-103E	1-TW PR SH #18 AWG	CB-103E	3/4"	CONTROL	LCP-TK-001/2	TANK #002 LIT-002	EXPOSED	INTRINSICALLY SAFE CIRCUIT
CB-104	1-6 STRAND FIBER OPTIC CABLE 62.5 MICRON	CB-104	2"	COMMUNICATION	FUEL TANKS 001/2 PLATFORM (FST-MBIO)	BOP-JB-001	U/G & EXPOSED	LOSE TUBE CONSTRUCTION
CB-105	EMPTY	CB-105	2"	CONTROL	FUEL TANK PLATFORM	BOP-JB-001	U/G & EXPOSED	SPARE
CC-101	10-1/C#14, 1-1/C#12(G)	CC-101	3/4"	SIGNAL	DAY TANK LCP-TK-003	DT-MBIO	U/G & EXPOSED	(4#14 SPARE)
CC-101A	3-TW PR SH #18 AWG	CC-101A	1"	SIGNAL	DAY TANK LCP-TK-003	DT-MBIO	U/G & EXPOSED	(1 TW PR SH SPARE)
CC-101B	2-1/C#12, 1-1/C#12(G)	CC-101B	3/4"	120V. POWER	DAY TANK LCP-TK-003	DT-MBIO	EXPOSED	
CC-101C	8-1/C#14, 1-1/C#12(G)	CC-101C	3/4"	CONTROL	LCP-TK-003	DAY TANK LEVEL SWITCHES	EXPOSED	(2#14 SPARE) INTRINSICALLY SAFE CIRCUITS
CC-101D	1-TW PR SH #18 AWG	CC-101D	3/4"	CONTROL	LCP-TK-003	DAY TANK LE-003	EXPOSED	INTRINSICALLY SAFE CIRCUIT
CC-102	1-6 STRAND FIBER OPTIC CABLE 62.5 MICRON	CC-102	2"	COMMUNICATION	DAY TANK LCP-TK-003 (DT-MBIO)	BOP-JB-001	U/G & EXPOSED	LOSE TUBE CONSTRUCTION
CC-103	5-TW PR SH #18 AWG	CC-103	1¼"	CONTROL	DAY TANK LCP-TK-003	LCP-DTFF	U/G & EXPOSED	1 SPARE

SPECIFIC NOTES:

1. ALL CONDUIT AND WIRE TO BE INSTALLED AS NEW UNDER THIS CONTRACT.
2. FACP & ASSOCIATED CONDUIT/CABLE ARE NOT LISTED ON THIS DWG. SEE DWG. EB-04.
3. TERMINATE CABLE WITH MANUFACTURER'S TERMINATION KITS PER MANUFACTURER'S INSTRUCTIONS.

(A) VFD REPLACED BY FOAM BOOSTER PUMP STARTER VIA RFI-0067

REV.	DATE	AS-BUILT MARKUPS	BY
A	10-25-19	AS-BUILTS ADDED	LHN
1	3-23-15	VFD SPACE HEATER REVISON (ADD.3)	HGH

SEWERAGE AND WATER BOARD OF NEW ORLEANS

CONTRACT No. 1369

HMGP EMERGENCY FUEL STORAGE
RETROFIT POWER PLANT
MAIN WATER PURIFICATION PLANT POWER COMPLEX

CONDUIT & CABLE SCHEDULE

THIS DOCUMENT ORIGINALLY ISSUED AND SEALED BY HENRY G. HAWNEY, LICENCE No. 19229 ON 2-6-15.

E

Trigon — Quality ▲ Commitment ▲ Client Service

TRIGON DWG. NO. EZ-02

TRIGON ASSOCIATES, LLC
1515 POYDRAS STREET
SUITE 2200
NEW ORLEANS, LA 70112
TEL: 504-585-5767
trigonassociates.com

DR:	S. CLARK
CK:	H. HAWNEY
AP:	H. HAWNEY
LAST EDIT:	
SCALE:	NOT TO SCALE
DATE:	JANUARY 28, 2015

GENERAL SUPERINTENDENT

DWG. No. 12098-W8

SET NO: SHEET NO: 60 OF 72

PANEL SCHEDULE

PANEL NAME LA

LOCATION FUEL STORAGE TANK AREA

FOUND ON DWG. NO. -

FED FROM -

AVAILABLE FAULT CURRENT - SYM. AMPS

PANEL AIC RATING 10,000
- ✖ FULLY RATED
- ☐ SERIES RATED FOR ____ KAIC FROM _____

FEEDER _____
- ☐ FEEDER PROTECTED BY OVERCURRENT DEVICE

VOLTAGE
- ☐ 480/277V, 3Ø 4W, WYE
- ✖ 208/120V, 3Ø 4W, WYE
- ☐ 240/120V, 3Ø 4W, DELTA W/BØ "STINGER"

MAINS, 30 AMP
- ✖ FACTORY MAIN CIRCUIT BREAKER
- ☐ SHUNT TRIP MAIN CB
- ☐ MAIN LUGS ONLY
- ☐ UL LISTED FEED-THRU LUGS
- ☐ MAIN FUSIBLE SWITCH, FURNISH FUSES: ≤ 600A, CLASS RK5, >600A, CLASS L, ALL RATED 200,000 AIC
- ✖ LIGHTNING SURGE PROTECTIVE DEVICE (SPD)

NEUTRAL ✖ 100% ☐ 200%

MOUNTING ✖ SURFACE ☐ FLUSH

ENCLOSURE ☐ NEMA1 ☐ NEMA3R ☐ NEMA12 ✖ NEMA4X STAINLESS STEEL
- ☐ LOCKABLE COVER

FEED ☐ TOP ✖ BOTTOM ☐ MOUNT IN MCC

BRANCHES
- ✖ BOLT-ON, PANELBOARD CONSTR.
- ☐ STAB-IN, LOAD CENTER CONSTR.
- ☐ FUSIBLE SWITCHES W/ CLASS R FUSE REJ. CLIPS, FURNISH ALL FUSES, CLASS RK5, 200,000 AIC

PANEL HAS FRONT ACCESS ONLY
ALL COPPER BUSSING
FURNISH COPPER GROUND BAR KIT
- ☐ ALSO FURNISH ADDITIONAL ISOLATED GROUND BAR KIT
- ☐ SERVICE ENTRANCE LABEL
- ✖ PANEL NAMEPLATE, 2"x4" ENGRAVED PLASTIC LAMINATE
  USE 1/4" LETTERING FOR PANEL NAME, ON 1 LINE
  USE 1/8" LETTERING FOR VOLTS, AMPS, WHERE FED FROM, MO./YR. INSTALLED, ON 4 LINES
- ✖ BLACK FIELD, WHITE LETTERS
- ☐ RED FIELD, WHITE LETTERS

CKT. #	# OF POLES	TRIP AMPS	LOAD DESCRIPTION	VOLT-AMPS A	VOLT-AMPS B	VOLT-AMPS C	LTS	REC	MIS	MIS	REC	LTS	VOLT-AMPS A	VOLT-AMPS B	VOLT-AMPS C	LOAD DESCRIPTION	TRIP AMPS	# OF POLES	CKT. #
1	3	20	LIGHTING CONTACTOR "LC"	240									360			STORAGE TANK -002 RECEPTACLES	20	1	2
3					180									180		FUEL POLISHER PLATFORM RECEPTACLE	20	1	4
5						600									360	STORAGE TANK -001 RECEPTACLES	20	1	6
7	1	15	-	-									180			FUEL TRANSFER PLATFORM 1 RECEPTACLE	20	1	8
9	1	15	-		-									180		TRUCK LOADING AREA RECEPTACLE	20	1	10
11	1	15	-			-									-	FUEL TRANSFER PLATFORM (SPARE CKT.)	15	1	12
13	1	15	-	-									-			-	20	1	14
15	1	15	-		-									-		-	20	1	16
17	1	20	FOAM CONCENTRATE TANK RECEPTACLE			-									-	-	20	1	18
19	1	15	FOAM CONCENTRATE TANK (LCP-TK-005)	100									-			SPD	20	3	20
21	1	15	STORAGE TANKS PANEL (LCP-TK-001/002)		100									-					22
23	1	15	OWS PANEL (LCP-TK-004)			100									-				24
			SUBTOTAL ODD SIDE	340	280	700				SUBTOTAL EVEN SIDE			540	360	360				
										SUBTOTAL ODD SIDE			340	280	700				
										TOTAL CONNECTED LOAD			880	640	1060				

= 2.6 KVA

= 7 AMPS

TRIP AMPS = FUSE SIZE IF FUSIBLE SWITCHES

REMARKS:

1. ALL CIRCUITS 2#12, 1#12(G), 3/4"C. UNLESS NOTED OTHERWISE.
2. RUN 3#10, 1#10(N), 1#10(G), 3/4"C. TO ALL LIGHTING LOCATIONS. BALANCE PHASE LOAD AT EACH LOCATION.
3. TERMINATE IN 6"x4"x4" 304SS NEMA 4X ENCLOSURE MOUNTED ON PLATFORM.

LIGHTING FIXTURE SCHEDULE (2)

TYPE	MANUFACTURER & CATALOG No.	DESCRIPTION	LAMP QTY.	TYPE	VOLTS
F1	DIALIGHT # STWWC2N200SW3	AREA LIGHT, EPOXY POWDER COATED COPPER FREE ALUMINUM HOUSING, POLYCARBONATE LENS, NEMA4X, UL1598/A, L70 >100,000 HOURS, FACTORY SEALED, WIDE THROW, CCT=5000K, 4100 LUMENS, POLE MOUNT, THD <15%, 5-YEAR WARRANTY, 2" SLIP FILT STANCHION MOUNT JUNCTION BOX, DIALIGHT CATALOG NO. HZSTAN200S, AND BRACKET MOUNTING HARDWARE DIALIGHT CATALOG NO. HZXW3, 10' ALUMINUM SWIVELPOLE CATALOG NO. ST7-3000-P-AL	-	60W LED	120
F2	DIALIGHT #FLW266NC2NG200S LYTEPOLES # 305-5015-16-T2-SBF	FLOODLIGHT WITH MOUNTING BRACKET, NEMA4X, UL1598/A, (-40°c TO +65°c) 20KV SURGE PROTECTION, THD <15%, PF>0.9, NEMA6 BEAM PATTERN, cri=70, CCT=5000K, L70 RATED >100,000 HOUR AT 25°C, EPOXY POWDER COATED COPPER FREE ALUMINUM HOUSING, TEMPERED GLASS LENS, FACTORY SEALED, 10-YEAR WARRANTY. 2" SLIP-FIT STANCHION MOUNT JUNCTION BOX, DIALIGHT CATALOG NO. HZXSTAN200S, 16' ROUND TAPERED ALUMINUM POLE X 0.188" SATIN FINISH WITH FIXTURE MOUNTING ADAPTER (LYTEPOLES) PHOTOCELL INTERMATIC #LED4536SC WITH REMOTE POLE BRACKET/TWIST-LOCK RECEPTACLE CAT #K122.	-	107W LED	120
F3	DIALIGHT #FLW266NC2NG200S	IDENTICAL TO FIXTURE F2 WITH 10' SWIVEL POLE (SIMILAR TO FIXTURE F1)	-	107W LED	120

LIGHTING FIXTURE SCHEDULE NOTES:

1. ABOVE FIXTURES ARE BASIS OF DESIGN.
2. ALL POLES AND ATTACHED LIGHT FIXTURES TO BE RATED FOR 170 MPH WIND LOADING. SUBMIT DATA FOR ENGINEER APPROVAL.

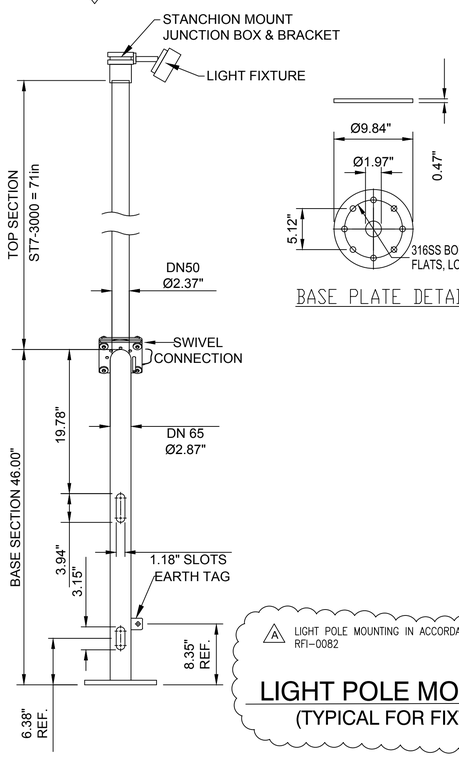

BASE PLATE DETAIL

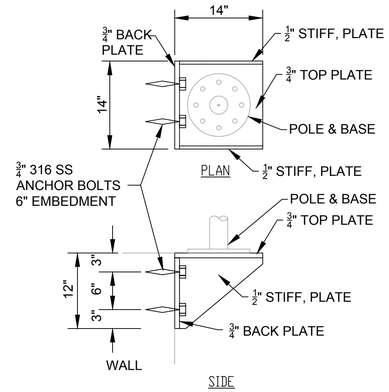

SIDE

WALL MOUNTING BRACKET
(STRUCTURE MOUNT SIMILAR, EXCEPT BOLTED TO STRUCTURE)

NOTES:

1. THE MOUNTING ARRANGEMENT SHOWN IS GENERIC. CONTRACTOR SHALL COORDINATE MOUNTING DETAILS FOR ACTUAL EQUIPMENT SUPPLIEC AND THE SPECIFICS OF EACH MOUNTING LOCATION.
2. HOT DIP GALVANIZED AFTER FABRICATION.

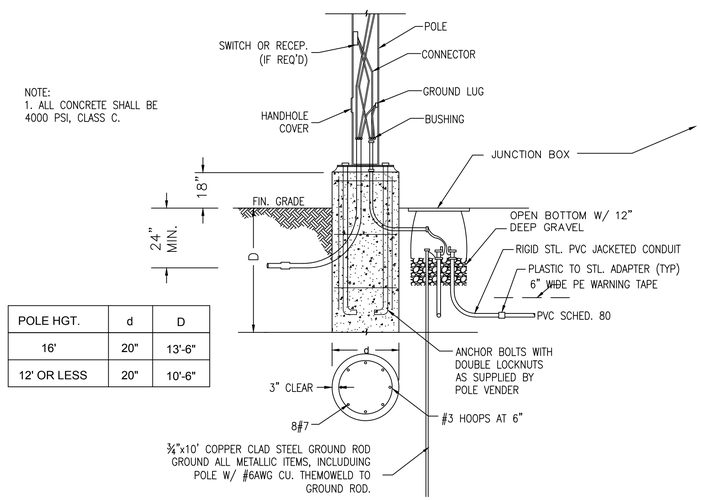

POLE HGT.	d	D
16'	20"	13'-6"
12' OR LESS	20"	10'-6"

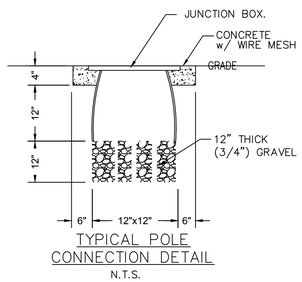

TYPICAL POLE CONNECTION DETAIL
N.T.S.

NOTES:

1. FOR LIGHTS MOUNTED ON ELEVATED STRUCTURES (NEW OR EXISTING), PROVIDE A FABRICATED BASE PLATE FOR POLE MOUNTING. UNIT SHALL BE BOLTED IN PLACE IN FIELD. ASSEMBLY SHALL BE HOT DIPPED GALVANIZED AFTER FABRICATION. THE ENTIRE ASSEMBLED STRUCTURE SHALL BE RATED FOR 150MPH WIND LOAD ON POLE AND FIXTURE.

LIGHT POLE MOUNTING AT GRADE ELEVATION
(TYPICAL FOR FIXTURE F2)
N.T.S.

A LIGHT POLE MOUNTING IN ACCORDANCE WITH RFI-0081 AND RFI-0082

LIGHT POLE MOUNTING
(TYPICAL FOR FIXTURE F1)
N.T.S.

REV.	DATE		BY
A	10-25-19	AS-BUILT MARKUPS	LHN

SEWERAGE AND WATER BOARD OF NEW ORLEANS

CONTRACT No. 1369

HMGP EMERGENCY FUEL STORAGE RETROFIT POWER PLANT
MAIN WATER PURIFICATION PLANT POWER COMPLEX

PANEL SCHEDULE & LIGHT FIXTURE SCHEDULE

THIS DOCUMENT ORIGINALLY ISSUED AND SEALED BY HENRY G. HAWNEY, LICENCE No. 19229 ON 2-6-15.

E

Trigon — Quality ▲ Commitment ▲ Client Service

TRIGON DWG. NO. EZ-03

TRIGON ASSOCIATES, LLC
1515 POYDRAS STREET
SUITE 2200
NEW ORLEANS, LA 70112
TEL: 504-585-5767
trigonassociates.com

DR: S. CLARK
CK: H. HAWNEY
AP: H. HAWNEY
LAST EDIT:
SCALE: NOT TO SCALE
DATE: JANUARY 28, 2015

GENERAL SUPERINTENDENT

DWG. No. 12098-W8

SET NO: SHEET NO: 61 OF 72

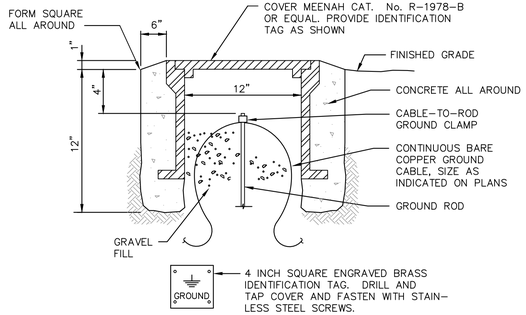

TYPICAL GROUND TEST WELL DETAIL

N.T.S.

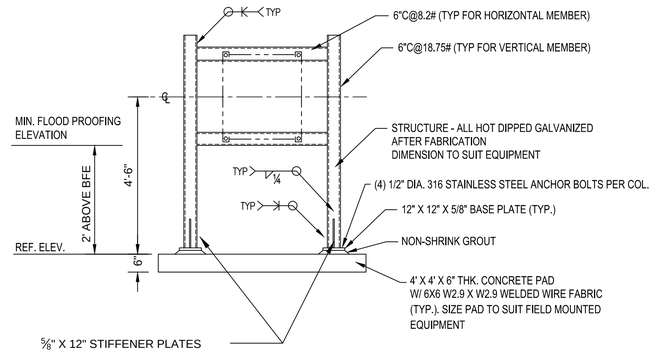

ENCLOSURE MOUNTING RACK - OUTDOOR DETAIL

N.T.S.

WELDING NOTES:

1. ALL PRIMARY MEMBERS SHALL HAVE FULL PENETRATION WELDS.
2. ALL SECONDARY MEMBERS SUCH AS PLATES AND STIFFENERS SHALL BE 1/4" FILLET WELDS MINIMUM.

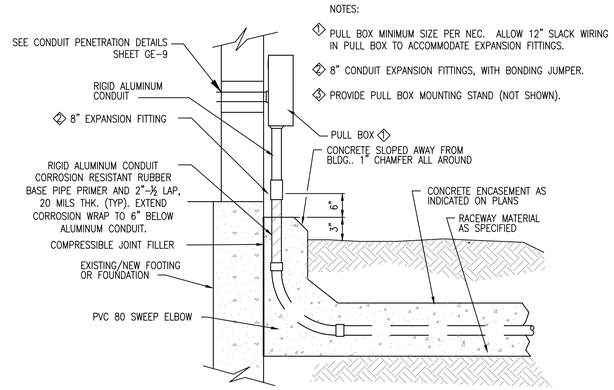

ABOVE GROUND CONDUIT TERMINATION DETAIL

REQUIRED ON ALL CONDUITS EMERGING FROM U/G

N.T.S.

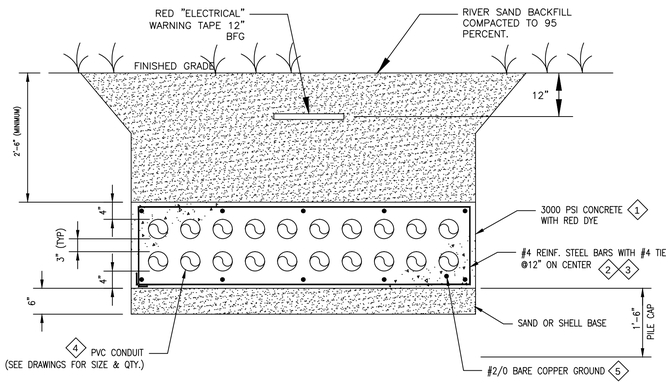

DUCT BANK NOTES:

1. DUCT BANK RED THROUGHOUT. MIX 8# RED DYE PER CUBIC YARD CONCRETE.
2. REINFORCEMENT STEEL 60KSI. 4 #4 CONTINUOUS FOR 1 CONDUIT, 6 #4 FOR 2 CONDUITS. ADD 2 MORE #4 CONTINUOUS FOR EACH ADDITIONAL 7" OF DUCTBANK WIDTH.
3. MINIMUM 3" CONCRETE COVER ON REINFORCEMENT STEEL.
4. POWER & FIBER OPTIC CABLES: 6" SEPARATION.
   13.8kV & SHIELDED SIGNAL CABLE: 24" SEPARATION.
   480V VFD & CONTROL OR SHIELDED CABLE 18" SEPARATION.
   480V. & SHIELDED SIGNAL CABLE: 15" SEPARATION.
   2080V. & SHIELDED SIGNAL CABLE: 6" SEPARATION.
5. ATTACH TO GROUND BUS AT BOTH ENDS OF DUCT BANK RUN.

DUCTBANK SECTION INPLANT INSTALLATION 1 (TYP)

N.T.S.

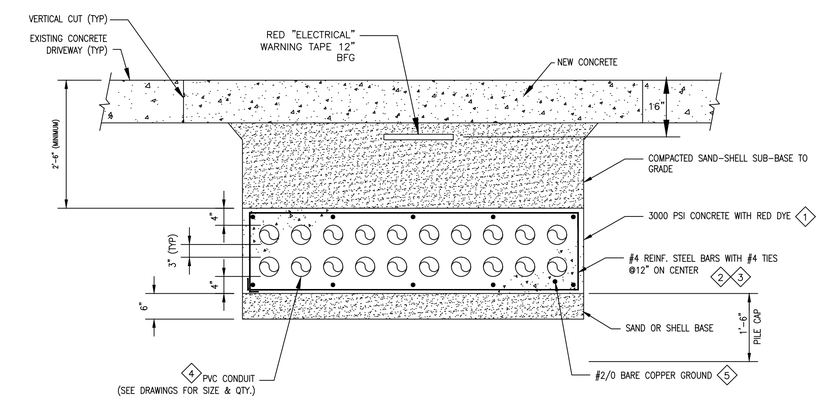

DUCT BANK NOTES:

1. DUCT BANK RED THROUGHOUT. MIX 8# RED DYE PER CUBIC YARD CONCRETE.
2. REINFORCEMENT STEEL 60KSI. 4 #4 CONTINUOUS FOR 1 CONDUIT, 6 #4 FOR 2 CONDUITS. ADD 2 MORE #4 CONTINUOUS FOR EACH ADDITIONAL 7" OF DUCTBANK WIDTH.
3. MINIMUM 3" CONCRETE COVER ON REINFORCEMENT STEEL.
4. POWER & FIBER OPTIC CABLES: 6" SEPARATION.
   13.8kV & SHIELDED SIGNAL CABLE: 24" SEPARATION.
   480V VED & CONTROL OR SHIELDED CABLE 18" SEPARATION.
   480V. & SHIELDED SIGNAL CABLE: 15" SEPARATION.
   2080V. & SHIELDED SIGNAL CABLE: 6" SEPARATION.
5. ATTACH TO GROUND BUS AT BOTH ENDS OF DUCT BANK RUN.

DUCTBANK SECTION INPLANT INSTALLATION 2 (TYP)

N.T.S.

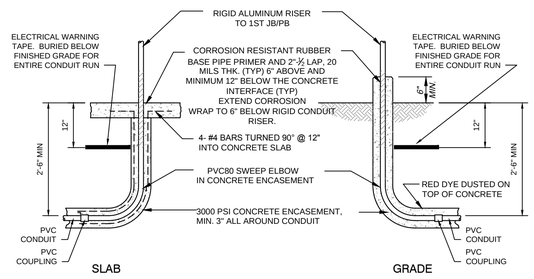

CONDUIT RISERS DETAIL

N.T.S.

REV.	DATE		BY
A	10-25-19	AS-BUILT MARKUPS	LHN

SEWERAGE AND WATER BOARD OF NEW ORLEANS

CONTRACT No. 1369

HMGP EMERGENCY FUEL STORAGE RETROFIT POWER PLANT
MAIN WATER PURIFICATION PLANT POWER COMPLEX

ELECTRICAL DETAILS SHEET 1

A AS-BUILT REVISIONS NOT PROVIDED FOR THIS SHEET BY THE CONTRACTOR

THIS DOCUMENT ORIGINALLY ISSUED AND SEALED BY HENRY G. HAWNEY, LICENCE No. 19229 ON 2-6-15.

E

Trigon
Quality ▲ Commitment ▲ Client Service

TRIGON DWG. NO. EZ-04

TRIGON ASSOCIATES, LLC
1515 POYDRAS STREET
SUITE 2200
NEW ORLEANS, LA 70112
TEL: 504-585-5767
trigonassociates.com

DR:	S. CLARK
CK:	H. HAWNEY
AP:	H. HAWNEY
LAST EDIT:	
SCALE:	NOT TO SCALE
DATE:	JANUARY 28, 2015

GENERAL SUPERINTENDENT

DWG. No. 12098-W8

SET NO: SHEET NO: 62 OF 72

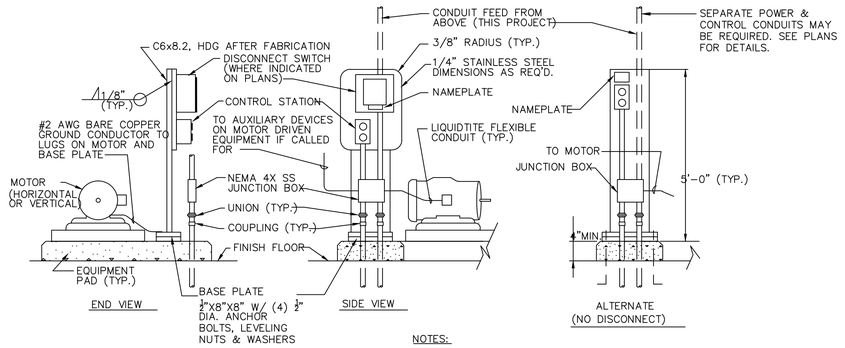

NOTES:

1. MOUNTING STAND MAY BE OMITTED IF MOTOR IS LOCATED WITHIN 5'-0" OF A WALL OR HANDRAIL, IN WHICH CASE THE DISCONNECT AND CONTROL STATION SHALL BE MOUNTED ON THE WALL OR HANDRAIL.

2. DO NOT INSTALL MOUNTING STAND SO AS TO OBSTRUCT THE REMOVAL OF THE MOTOR OR DRIVEN EQUIPMENT FOR MAINTENANCE OR REPAIR.

TYPICAL MOTOR INSTALLATION

NOT TO SCALE

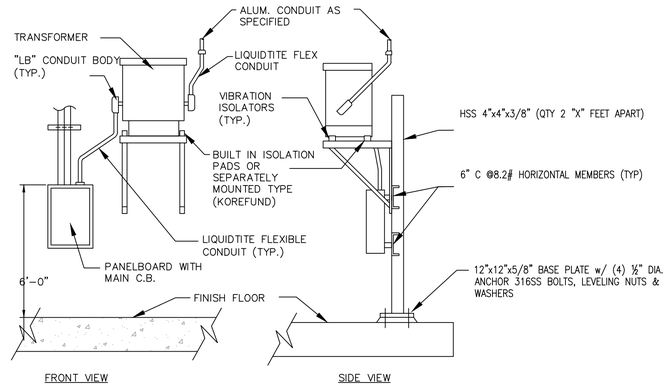

TYPICAL LIGHTING PANEL INSTALLATION DETAIL

NOT TO SCALE

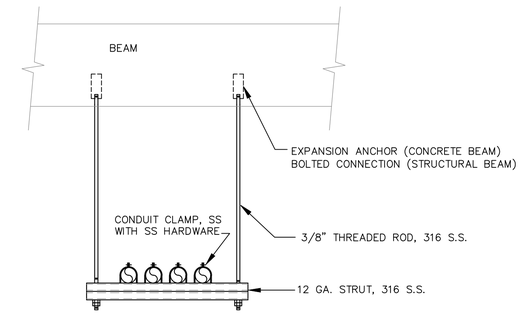

TYPICAL INTERIOR CONDUIT SUPPORT DETAIL

NOT TO SCALE

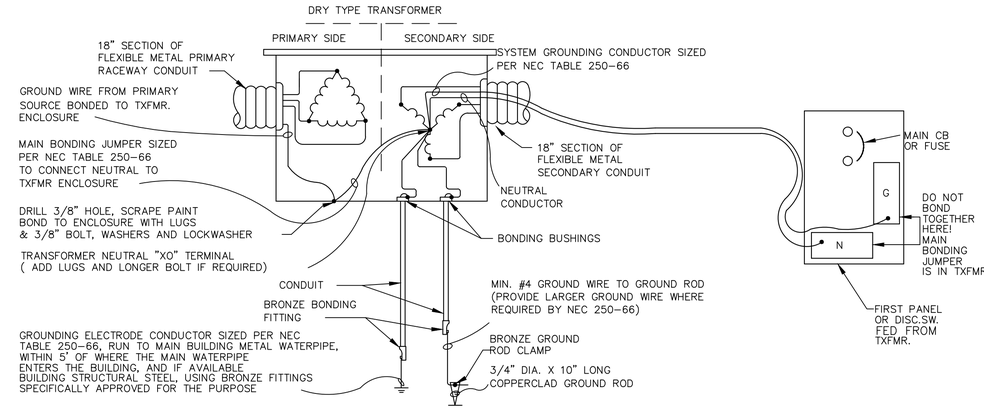

TYPICAL TRANSFOMER GROUNDING DETAIL

NOT TO SCALE

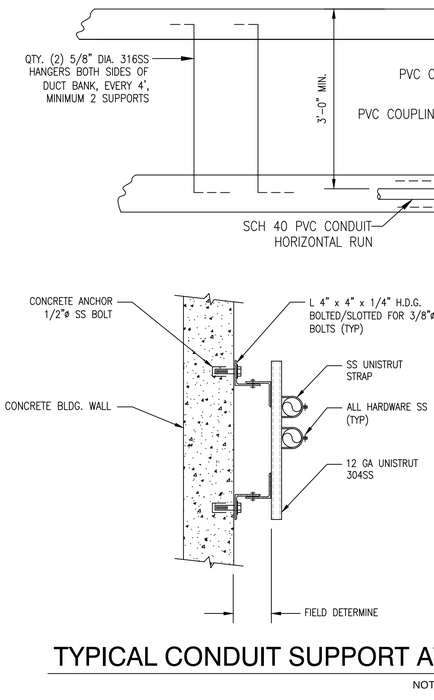

NOTES:

1. BOND ALL HUBS TO ENCLOSURE WITH SAME SIZE WIRE AS EQUIPMENT GROUNDING CONDUCTOR (EGC), WHERE THE HUB FITTING IS THE ENCLOSURE BOND, LOOP EGC THROUGH MYERS HUB GROUND LUG BEFORE TERMINATING ON GROUND BUS.
2. 3/8"ø, 316SS PIPE HANGER EVERY 4'. MIN. 2 PER CONDUIT RUN.

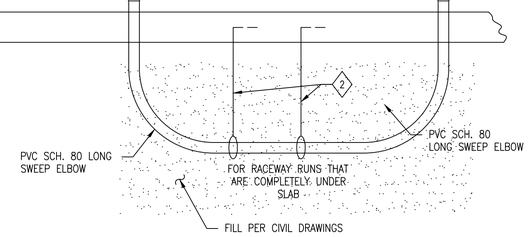

CONDUIT RISER - UNDER SLAB

NOT TO SCALE

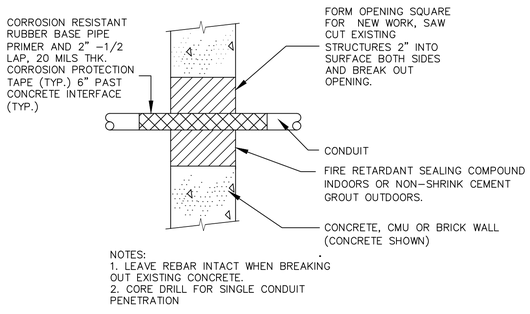

NOTES:
1. LEAVE REBAR INTACT WHEN BREAKING OUT EXISTING CONCRETE.
2. CORE DRILL FOR SINGLE CONDUIT PENETRATION

TYPICAL CONDUIT PENETRATION DETAIL
(Block Or Concrete Wall Or Floor)

NOT TO SCALE

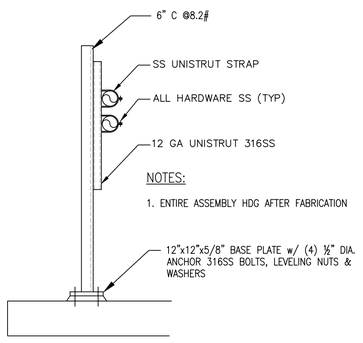

NOTES:

1. ENTIRE ASSEMBLY HDG AFTER FABRICATION

TYPICAL CONDUIT SUPPORT DETAIL

NOT TO SCALE

TYPICAL CONDUIT SUPPORT AT WALLS

NOT TO SCALE

REV.	DATE		BY
A	10-25-19	AS-BUILD MARKUPS	LHN

A AS-BUILT REVISIONS NOT PROVIDED FOR THIS SHEET BY THE CONTRACTOR.

THIS DOCUMENT ORIGINALLY ISSUED AND SEALED BY HENRY G. HAWNEY, LICENCE No. 19229 ON 2-6-15.

SEWERAGE AND WATER BOARD OF NEW ORLEANS

CONTRACT No. 1369

HMGP EMERGENCY FUEL STORAGE RETROFIT POWER PLANT
MAIN WATER PURIFICATION PLANT POWER COMPLEX

ELECTRICAL DETAILS SHEET 2

E

Trigon
Quality ▲ Commitment ▲ Client Service

TRIGON DWG. NO. EZ-05

TRIGON ASSOCIATES, LLC
1515 POYDRAS STREET
SUITE 2200
NEW ORLEANS, LA 70112
TEL: 504-585-5767
trigonassociates.com

DR:	S. CLARK
CK:	H. HAWNEY
AP:	H. HAWNEY
LAST EDIT:	
SCALE:	NOT TO SCALE
DATE:	JANUARY 28, 2015

GENERAL SUPERINTENDENT

DWG. No. 12098-W8

SET NO: SHEET NO: 63 OF 72

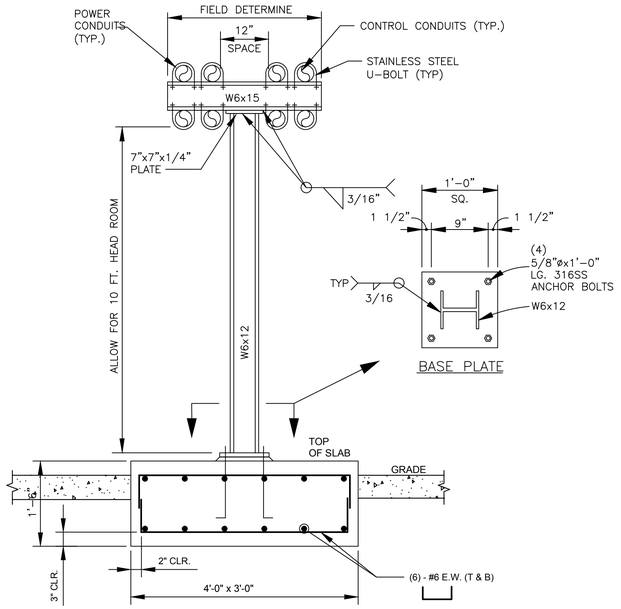

FABRICATION NOTES:

1. ALL STRUCTURAL STEEL, PLATES AND STRUCTURAL MEMBERS SHALL BE FABRICATED FROM A36 STEEL, AND SHALL BE HOT DIP GALVANIZED AFTER FABRICATION.

2. PROVIDE LEVELING NUTS AND FILL WITH NON SHRINK GROUT BETWEEN PLATE AND CONCRETE.

3. ABOVE DETAIL SHOWS CONDUITS SUPPORTED FROM ONE(1) VERTICAL W BEAM. WHERE ADDITIONAL SPACE IS REQUIRED, CONTRACTOR SHALL PROVIDE TWO (2) VERTICAL W BEAMS WITH AN ATTACHED HORIZONTAL BEAM. DUE TO PLANT SPACE AVAILABLE, CONTRACTOR SHALL CO-ORDINATE ROUTING, MOUNTING LOCATIONS, ETC. WITH ALL OTHER TRADES. CONTRACTOR SHALL MODIFY TO SUIT FIELD INSTALLATION CONDITIONS.

4. RACEWAY SEPARATION:
TO AVOID INTERFERENCE, KEEP A SEPARATION DISTANCE BETWEEN POWER RACEWAYS AND RACEWAYS FOR CONTROL/SIGNAL/COMMUNICATION
480V VFD RACEWAY – 18" SEPARATION
480V LINEAR POWER RACEWAY – 15" SEPARATION

OVERHEAD RACEWAY PIPE RACK - SUPPORT DETAIL

NOT TO SCALE

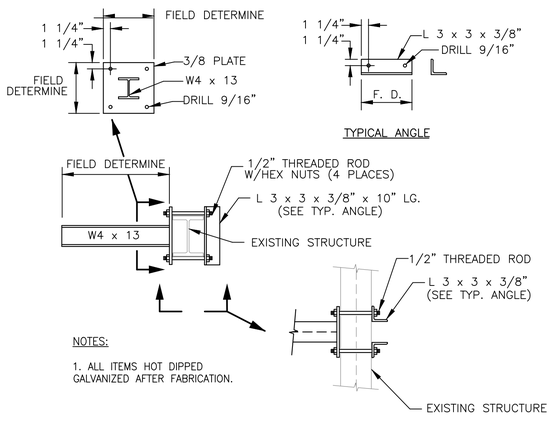

NOTES:

1. ALL ITEMS HOT DIPPED GALVANIZED AFTER FABRICATION.

TYPICAL CONDUIT SUPPORT DETAILS

NOT TO SCALE

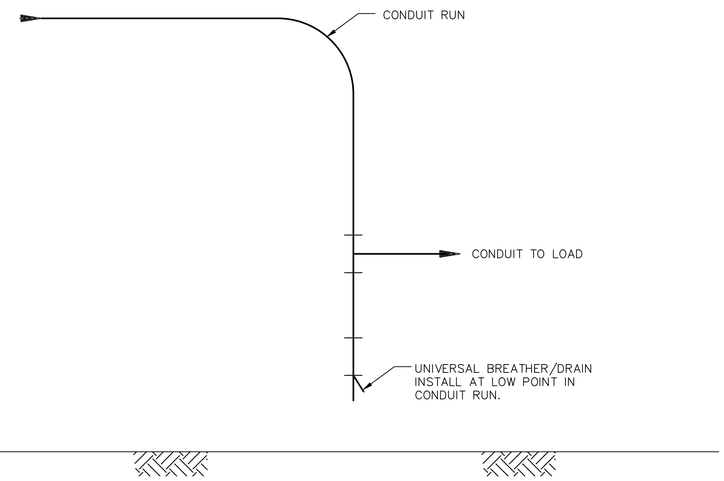

CONDUIT INSTALLATION - LOW POINT

NOT TO SCALE

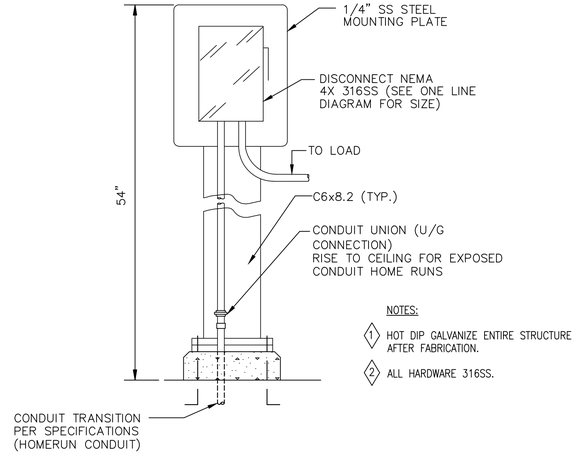

NOTES:

1. HOT DIP GALVANIZE ENTIRE STRUCTURE AFTER FABRICATION.
2. ALL HARDWARE 316SS.

TYPICAL DISCONNECT SWITCH MOUNTING STAND DETAIL

NOT TO SCALE

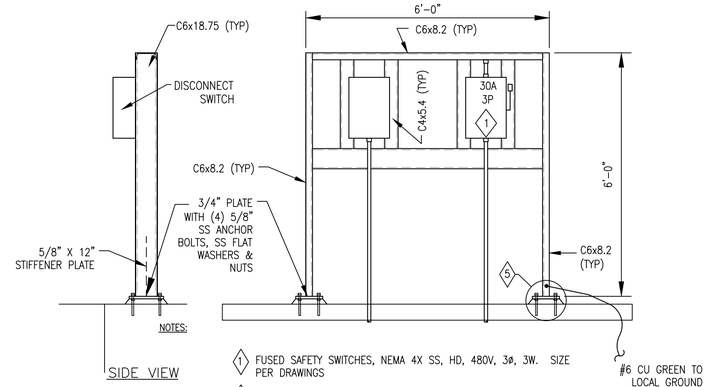

NOTES:

1. FUSED SAFETY SWITCHES, NEMA 4X SS, HD, 480V, 3ø, 3W. SIZE PER DRAWINGS
2. HOT DIP GALVANIZE ENTIRE STRUCTURE AFTER FABRICATION.
3. ALL HARDWARE 316SS.
4. COORDINATE RACK MOUNTING DETAIL WITH MOUNTING LOCATION
5. USE EXISTING STRUCTURE IF AVAILABLE. OTHERWISE PROVIDE 8" HIGH 4000 PSI CONCRETE PAD (MIN 4" ABOVE GRADE) WITH #3 REBAR EACH WAY AT 12" CENTERS AND 4x4-4/4 WIRE MESH. PAD SIZE TO ACCOMODATE RACK & MIN. 4' CLEAR SPACE IN FRONT OF RACK. EXTEND PAD MIN. 12" BEYOND EACH SIDE OF RACK.

TYPICAL EQUIPMENT RACK MOUNTING DETAIL

NOT TO SCALE

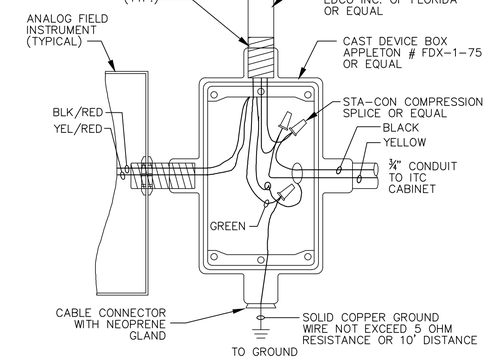

TYPICAL LIGHTNING SURGE SUPPRESSOR DEVICE (SPD) INSTALLATION

N.T.S.

REV.	DATE	AS-BUILT MARKUPS	BY
A	10-25-19	AS-BUILT MARKUPS	LHN

SEWERAGE AND WATER BOARD OF NEW ORLEANS

CONTRACT No. 1369

HMGP EMERGENCY FUEL STORAGE RETROFIT POWER PLANT
MAIN WATER PURIFICATION PLANT POWER COMPLEX

A AS-BUILT REVISIONS NOT PROVIDED FOR THIS SHEET BY THE CONTRACTOR

THIS DOCUMENT ORIGINALLY ISSUED AND SEALED BY HENRY G. HAWNEY, LICENCE No. 19229 ON 2-6-15.

ELECTRICAL DETAILS SHEET 3

E

Trigon — Quality ▲ Commitment ▲ Client Service

TRIGON DWG. NO. EZ-06

TRIGON ASSOCIATES, LLC
1515 POYDRAS STREET
SUITE 2200
NEW ORLEANS, LA 70112
TEL: 504-585-5767
trigonassociates.com

DR:	S. CLARK
CK:	H. HAWNEY
AP:	H. HAWNEY
LAST EDIT:	
SCALE:	NOT TO SCALE
DATE:	JANUARY 28, 2015

GENERAL SUPERINTENDENT

DWG. No. 12098-W8

SET NO: SHEET NO: 64 OF 72

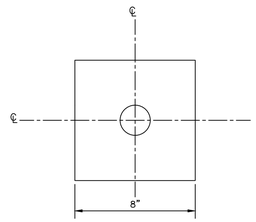

PLAN

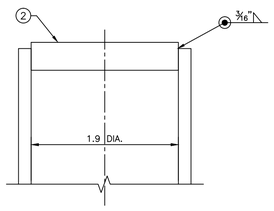

DETAIL "A"

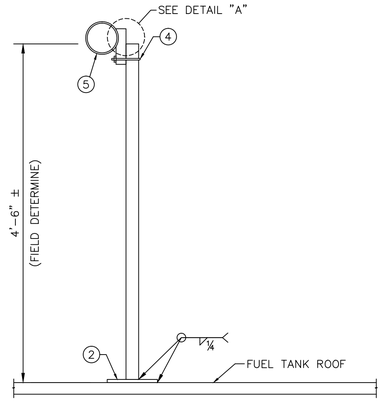

NO.	QTY.	DESRIPTION
1	6'	2" SCHEDULE 80 PIPE, HOT DIPPED GALVANIZED
2	AR	PLATE, HOT DIPPED GALVANIZED
3	4	NOT USED
4	1	MTG BRACKET SUPPLIED BY INST. VENDOR
5	1	TRANSMITTER

NOTES:

1. FIELD WELD TO FUEL TANK ROOF (TK-001, -002)

TYPICAL FLOOR MOUNT, MULTIPLE OR SINGLE INSTRUMENT

(TYPICAL FOR FACP - UVIR)

N.T.S.

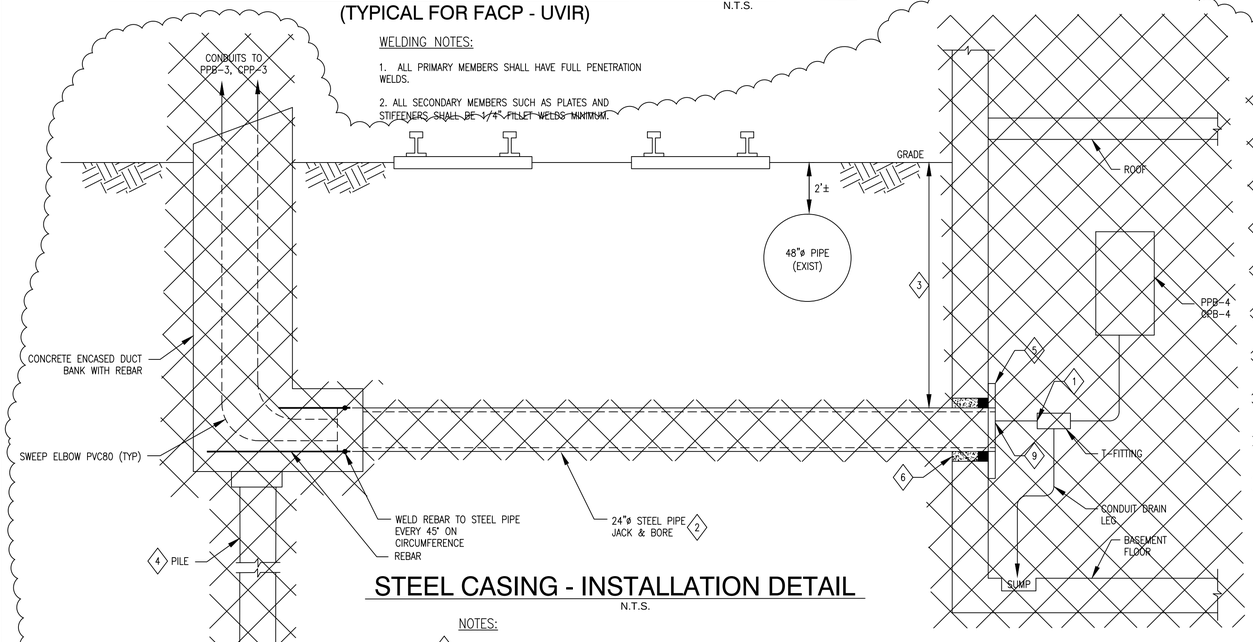

WELDING NOTES:

1. ALL PRIMARY MEMBERS SHALL HAVE FULL PENETRATION WELDS.
2. ALL SECONDARY MEMBERS SUCH AS PLATES AND STIFFENERS SHALL BE 1/4" FILLET WELDS MINIMUM.

STEEL CASING - INSTALLATION DETAIL

N.T.S.

NOTES:

1. SEAL EACH CONDUIT WITH POLYWATER FST-250 SEALANT.
2. 24" STEEL PIPE: ASTM A-139, GRADE B, 35,000 PSI MINIMUM YIELD STRENGTH. WELD PIPE SECTIONS. EACH WELD SHALL BE X-RAYED WHEN COMPLETED.
3. SEE CIVIL/STRUCTURAL DRAWINGS FOR DEPTH. MINIMUM 2' UNDER 48"ø WATER MAIN.
4. SEE CIVIL/STRUCTURAL DRAWINGS FOR PILE.
5. LINK SEAL FITTING: 316SS.
6. FILL WITH NON-SHRINK CEMENT GROUT.
7. SEE CIVIL/STRUCTURAL DRAWINGS FOR INSTALLATION DETAILS.
8. SEE CIVIL/STRUCTURAL SPECIFICATIONS FOR JACK & BORE SPECIFICATION.
9. PROVIDE A CLOSURE PLATE (⅜" THICK) ON THE 24" PIPE (NOT SHOWN ON ABOVE DETAIL). PROVIDE OPENINGS FOR CONDUITS. ALL OPENINGS SHALL BE SEALED TO PREVENT WATER LEAKAGE INGRESS. SUBMIT CONSTRUCTION DETAILS TO ENGINEER.

A JACK AND BORE REPLACED WITH OPEN CUT PER FCO-009/RFQ-001

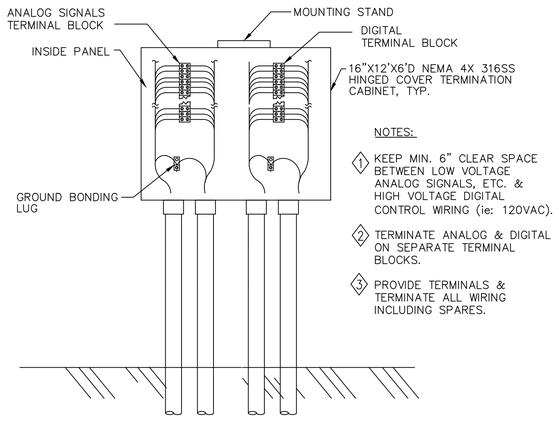

NOTES:

1. KEEP MIN. 6" CLEAR SPACE BETWEEN LOW VOLTAGE ANALOG SIGNALS, ETC. & HIGH VOLTAGE DIGITAL CONTROL WIRING (ie: 120VAC).
2. TERMINATE ANALOG & DIGITAL ON SEPARATE TERMINAL BLOCKS.
3. PROVIDE TERMINALS & TERMINATE ALL WIRING INCLUDING SPARES.

FIELD TERMINATION CABINET (TC) OR JUNCTION BOX

N.T.S.

NOTE: FLOOR MOUNTING RACK NOT SHOWN BUT REQUIRED.

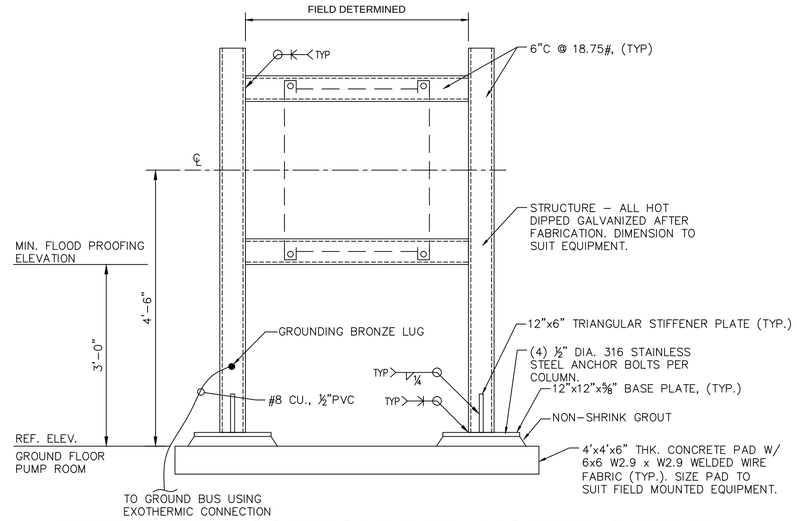

TYPICAL FIELD CONTROL PANEL - MOUNTING DETAIL

(TYPICAL FOR MISC. PANELS, ETC.)

N.T.S.

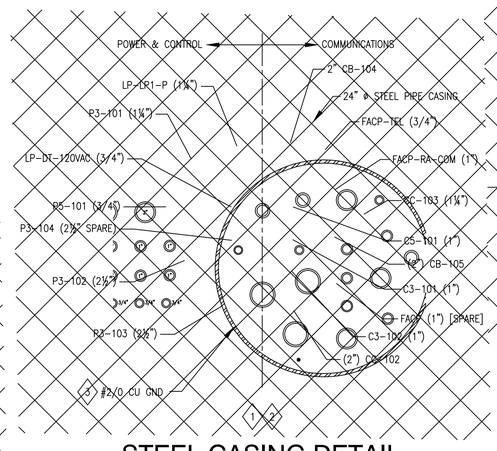

STEEL CASING DETAIL

SCALE: 1½"=1'-0"

NOTES:

1. PROVIDE CONDUIT SPACERS AT 5' INTERVALS. MAINTAIN 3" SEPARATION BETWEEN POWER CONDUITS AND 2" SEPARATION BETWEEN CONTROL CONDUITS.
2. CONDUITS SHALL MAINTAIN THE SAME POSITION ENTERING AND LEAVING THE CASING. AFTER THE CONDUITS ARE IN PLACE, A SAND/CEMENT SLURRY (MINIMUM OF SIX SACKS OF CEMENT PER CUBIC YARD) SHALL BE USED TO FILL ALL VOIDS.
3. BOND GROUND WIRE AT BOTH ENDS TO PROVIDE GROUND CONTINUITY FROM SOURCE TO LOAD.

WELDING NOTES:

1. ALL PRIMARY MEMBERS SHALL HAVE FULL PENETRATION WELDS.
2. ALL SECONDARY MEMBERS SUCH AS PLATES AND STIFFENERS SHALL BE 1/4" FILLET WELDS MINIMUM.

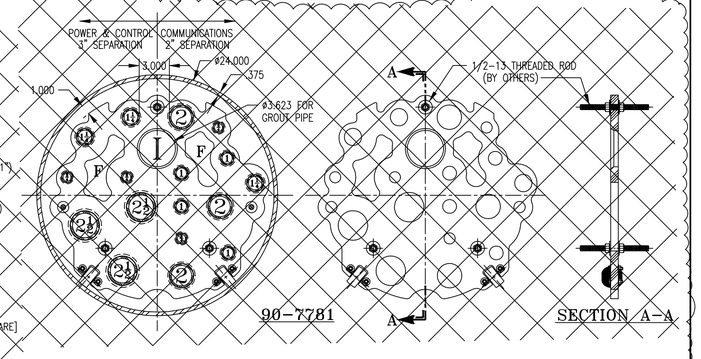

CASING INSERT DETAIL

SCALE: NONE

REV.	DATE	AS-BUILT MARKUPS	BY
A	10-25-19	AS-BUILT MARKUPS	LHN

SEWERAGE AND WATER BOARD OF NEW ORLEANS

CONTRACT No. 1369

HMGP EMERGENCY FUEL STORAGE RETROFIT POWER PLANT
MAIN WATER PURIFICATION PLANT POWER COMPLEX

ELECTRICAL DETAILS
SHEET 4

THIS DOCUMENT ORIGINALLY ISSUED AND SEALED BY HENRY G. HAWNEY, LICENCE No. 19229 ON 2-6-15.

E

Trigon
Quality ▲ Commitment ▲ Client Service

TRIGON DWG. NO. EZ-07

TRIGON ASSOCIATES, LLC
1515 POYDRAS STREET
SUITE 2200
NEW ORLEANS, LA 70112
TEL: 504-585-5767

trigonassociates.com

DR:	S. CLARK
CK:	H. HAWNEY
AP:	H. HAWNEY
LAST EDIT:	
SCALE:	NOT TO SCALE
DATE:	JANUARY 28, 2015

GENERAL SUPERINTENDENT

DWG. No. 12098-W8

SET NO: SHEET NO: 65 OF 72

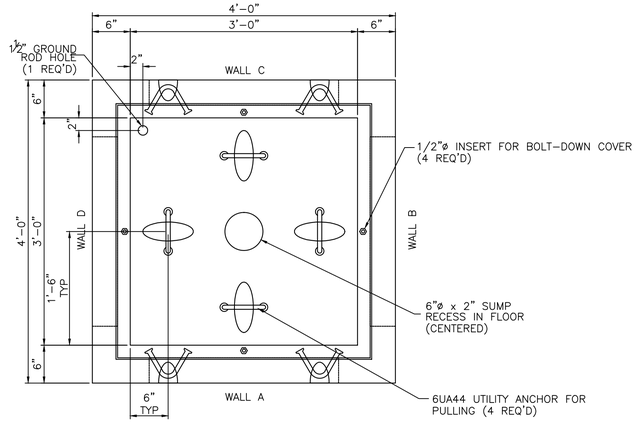

PLAN VIEW
SCALE: 1 1/2" = 1'-0"

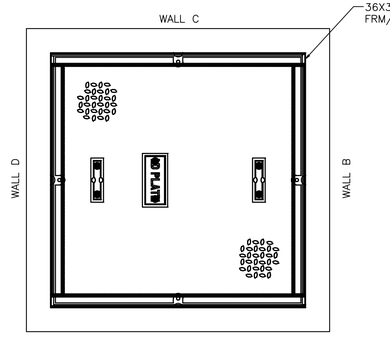

PLAN VIEW W/ FRAME & COVER
SCALE: 1 1/2" = 1'-0"

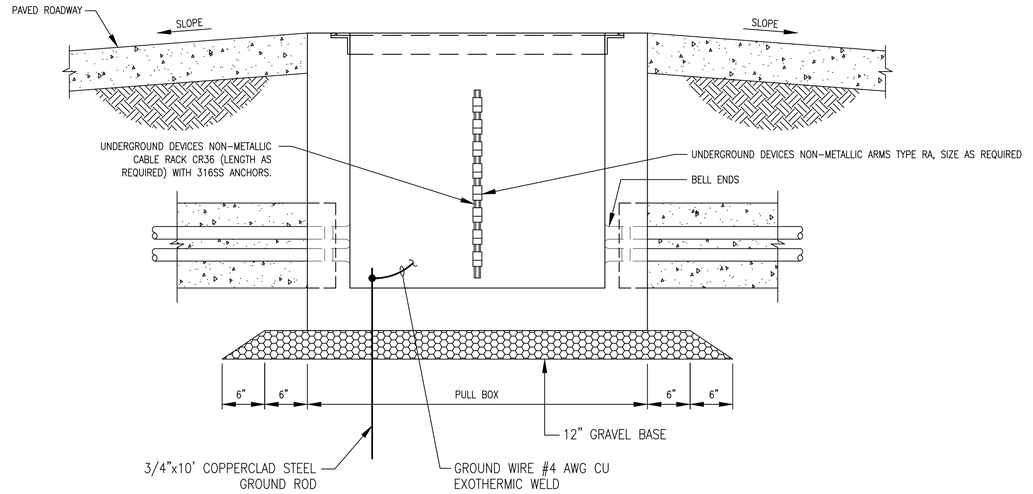

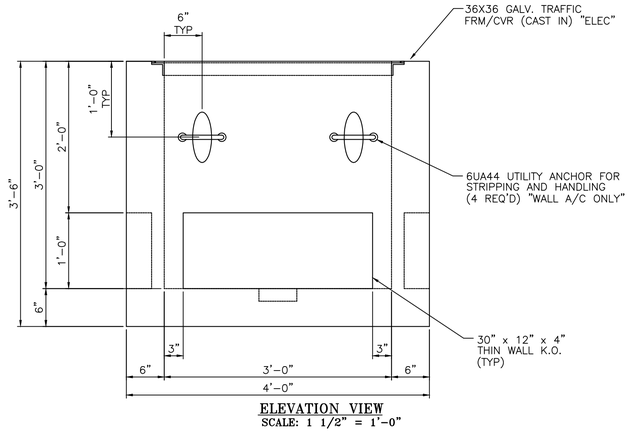

ELEVATION VIEW
SCALE: 1 1/2" = 1'-0"

PPB-1, PPB-2 – 36"x36"x36"
CPB-1, CPB-2 – 36"x36"x36"

PRECAST IN-GROUND PULL BOX (TYP)

NOTES:

1. COVER TO BE INSCRIBED "ELECTRIC POWER" OR "ELECTRIC CONTROL".

GENERAL NOTES:

DESIGN LOAD : AASHTO H-20-44, CONTINOUS TRAFFIC (FULL H-20).

STRUCTURAL CONCRETE : CONCRETE SHALL BE 6000 PSI MIN. CEMENT SHALL BE ASTM C150.

REINFORCING STEEL : REINFORCING STEEL SHALL BE ASTM A-615 GRADE 60UNLESS OTHERWISE NOTED. DIMENSIONS FOR FABRICATED REINFORCING STEEL ARE OUT TO OUT. ALL OTHER DIMENSIONS RELATING TO REINFORCING STEEL ARE TO BAR CENTERS UNLESS OTHERWISE NOTED.

FINISH OF CONCRETE : BOTTOM OF BASE SHALL BE A STEEL TROWEL FINISH . ALL OTHER SURFACES SHALL BE AN INDUSTRIAL FORM FINISH .

NOTES:

1. SEE PLAN DRAWINGS FOR ORIENTATION OF DUCTS ENTERING PULL BOX. PROVIDE A PULLING-IN IRON OPPOSITE EACH SIDE IN WHICH DUCTS ENTER.

2. NUMBER OF NON-METALLIC ARMS AND EXACT LOCATION OF RACKS SHALL BE AS REQUIRED FOR NUMBER OF FEEDERS IN PULL BOX. (MINIMUM OF 4 RACKS SHALL BE PROVIDED IN EACH PULL BOX.)

3. BOND ALL METAL INCLUDING COVER, PULLING IRONS & FRAME TO GROUND RODS WITH #4 B.C. BOND TO DUCT BANK GROUND WIRE.

4. WHERE CABLE PULL BOX ENTRY AND EXIT POINTS ARE AT RIGHT ANGLES TO ONE ANOTHER, THE CABLES SHALL RUN AROUND THE INSIDE PULL BOX PERIMETER, AND BE NEATLY TIED AND STRAPPED TO THE SUPPORTING ARMS. WHERE CABLE PULL BOX ENTRY AND EXIT POINTS ARE IN THE SAME HORIZONTAL PLANE, THE CABLES SHALL BE RUN ON THE PULL BOX PERIMETER WALL, AND BE NEATLY TIED AND STRAPPED TO THE SUPPORTING ARMS.

5. THIS STRUCTURE SHALL BE DESIGNED AT THE CONTRACTOR'S EXPENSE BY A PROFESSIONAL ENGINEER REGISTERED IN THE STATE OF LOUISIANA. STRUCTURAL SIGN & SEAL CALCULATIONS & DESIGN DETAILS. SUBMIT FOR ENGINEER APPROVAL.

REV.	DATE	AS-BUILT MARKUPS	BY
A	10-25-19	AS-BUILT MARKUPS	LHN

SEWERAGE AND WATER BOARD OF NEW ORLEANS

CONTRACT No. 1369

HMGP EMERGENCY FUEL STORAGE RETROFIT POWER PLANT
MAIN WATER PURIFICATION PLANT POWER COMPLEX

ELECTRICAL DETAILS
SHEET 5

A AS-BUILT REVISIONS NOT PROVIDED FOR THIS SHEET BY THE CONTRACTOR

THIS DOCUMENT ORIGINALLY ISSUED AND SEALED BY HENRY G. HAWNEY, LICENCE No. 19229 ON 2-6-15.

E

Trigon
Quality ▲ Commitment ▲ Client Service

TRIGON DWG. NO. EZ-08

TRIGON ASSOCIATES, LLC
1515 POYDRAS STREET
SUITE 2200
NEW ORLEANS, LA 70112
TEL: 504-585-5767

trigonassociates.com

DR:	S. CLARK
CK:	H. HAWNEY
AP:	H. HAWNEY
LAST EDIT:	
SCALE:	NOT TO SCALE
DATE:	JANUARY 28, 2015

GENERAL SUPERINTENDENT

DWG. No. 12098-W8

SET NO: SHEET NO: 66 OF 72

INSTRUMENT VALVE DESIGNATIONS

	BV	BALL VALVE
	GV	GATE VALVE
	NV	NEEDLE VALVE
	CV	CHECK VALVE
	BFV	BUTTERFLY VALVE
TP		TEST POINT
S / DV		SOLENOID DELUGE VALVE
WPBV		WATER POWERED BALL VALVE
		REDUCED PRESSURE BACKFLOW PREVENTER
	NO	NORMALLY OPEN
	NC	NORMALLY CLOSED

PIPE AND FITTING SYMBOLS

	REDUCER
	QUICK CONNECT COUPLING

MISCELLANEOUS EQUIPMENT DESIGNATIONS

VENT
FOAM CHAMBER
INSECT SCREEN
STROBE/HORN
SIGHT GAUGE
RATIO CONTROLLER
MANWAY
BOOSTER PUMP
FILTER
POSITIVE DISPLACEMENT PUMP

INSTRUMENTATION SYMBOLS

XX / XX	HS	HORN STROBE
XX / XX	LAH	LEVEL ALARM HIGH
HS	LAHH	LEVEL ALARM HIGH HIGH
	LAL	LEVEL ALARM LOW
XX	LALL	LEVEL ALARM LOW LOW
	LAX	LEAK DETECTION
XX	LG	LEVEL GAUGE
	LI	LEVEL INDICATOR
	LIT	LEVEL INDICATING TRASMITTER
	LIT	LEVEL INDICATING GAUGE
	LSH	LEVEL SENSING HIGH
	LSHH	LEVEL SENSING HIGH HIGH
	LSL	LEVEL SENSING LOW
	LSLL	LEVEL SENSING LOW LOW
	LSX	LEVEL DETECTION
	TP	TEST POINT DETECTOR
	UA	MULTI-FUNCTION ALARM
	UVIR	ULTRAVIOLET INFRARED DETECTOR
	YC	EVENT CONTROL
	CS	CARBON STEEL
	CU	COPPER
	DI	DUCTILE IRON
	PVC	POLYVINYL CHLORIDE
	FLH	FLEXIBLE HOSE
	SS	STAINLESS STEEL

PIPING LINE DESIGNATIONS

XXX	CONTINUATION ARROW (SHEET NO)
NEW AG / EXISTING AG	NEW ABOVE GROUND/EXISTING ABOVE GROUND INTERFACE
AG / UG	ABOVE GROUND/BELOW GROUND INTERFACE
	FLANGED CONNECTION

LINE SERVICE DESIGNATIONS

FO	FUEL OIL
OW	OIL WATER
FS	FIRE SUPPRESSION
PW	POTABLE WATER
FC	FOAM CONCENTRATE
PFO	POLISHED FUEL OIL
TW	TREATED WATER

REV.	DATE	DESCRIPTION	BY
A	10–25–19	AS–BUILT MARKUPS	LHN

A AS–BUILT REVISIONS NOT PROVIDED FOR THIS SHEET BY THE CONTRACTOR

SEWERAGE AND WATER BOARD OF NEW ORLEANS

CONTRACT No. 1369

HMGP EMERGENCY FUEL STORAGE RETROFIT POWER PLANT
MAIN WATER PURIFICATION PLANT POWER COMPLEX

PIPING AND INSTRUMENTATATION DIAGRAM - SYMBOLOGY AND LEGEND

THIS DOCUMENT ORIGINALLY ISSUED AND SEALED BY LISBETH HABANS NAGRATH, LICENCE No. 36792 ON 2-6-15. THIS DOCUMENT SHOULD NOT BE CONSIDERED A CERTIFIED DOCUMENT.

Trigon
Quality ▲ Commitment ▲ Client Service

TRIGON ASSOCIATES, LLC
1515 POYDRAS STREET
SUITE 2200
NEW ORLEANS, LA 70112
TEL: 504-585-5767

trigonassociates.com

TRIGON DWG. NO. IA-01

DR. SJ CLARK
CK: RA CASSANOVA
AP: LH NAGRATH
LAST EDIT:
SCALE: NOT TO SCALE
DATE: JANUARY 28, 2015

GENERAL SUPERINTENDENT

DWG. No. 12098-W8

SET NO: SHEET NO: 67 OF 72

TK-001
EMERGENCY FUEL STORAGE TANK
DESIGN: 522,000 GALLONS
TYPE: ABOVE GROUND, VERTICAL

FP-001
FUEL POLISHER
DESIGN: 220 GPM
MOTOR: 15 HP
ELECTRICAL: 3 PHASE, 480V, 60 Hz, 30 A

TK-002
EMERGENCY FUEL STORAGE TANK
DESIGN: 522,000 GALLONS
TYPE: ABOVE GROUND, VERTICAL

NOTES:

1. BOP–PLC IS PART OF CONTRACT CP–1370 WORK INCLUDING WIRING FROM BOP–JB–001.
2. PROVIDE NEEDLE VALVES AT BENDS IN ABOVE GRADE FUEL PIPING, NOT SHOWN AT ALL BENDS.

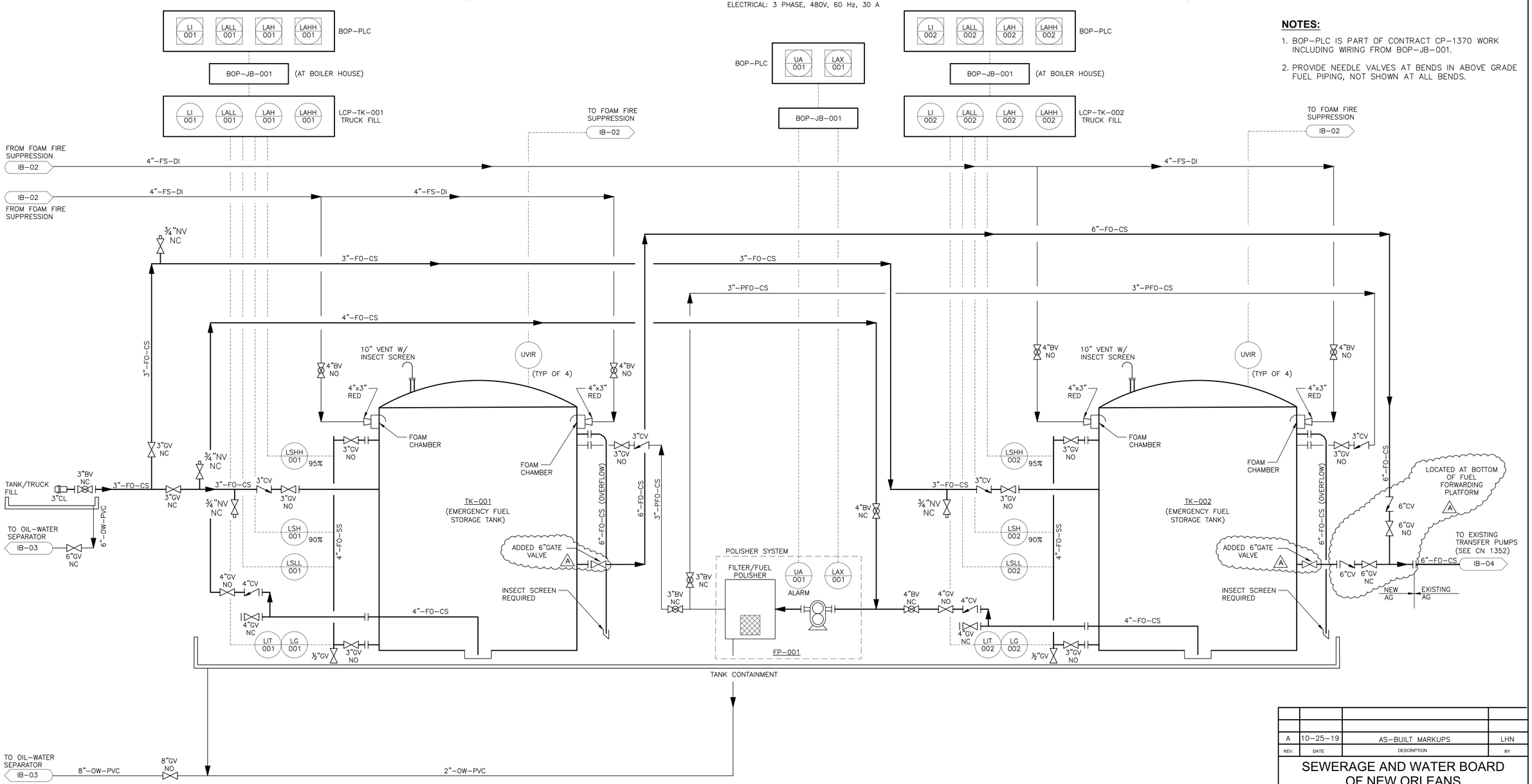

REV.	DATE	DESCRIPTION	BY
A	10–25–19	AS–BUILT MARKUPS	LHN

SEWERAGE AND WATER BOARD OF NEW ORLEANS

CONTRACT No. 1369

HMGP EMERGENCY FUEL STORAGE
RETROFIT POWER PLANT
MAIN WATER PURIFICATION PLANT POWER COMPLEX

FUEL STORAGE (TK-001 & TK-002) P&ID

THIS DOCUMENT ORIGINALLY ISSUED AND SEALED BY LISBETH HABANS NAGRATH, LICENCE No. 36792 ON 2-6-15. THIS DOCUMENT SHOULD NOT BE CONSIDERED A CERTIFIED DOCUMENT.

Trigon
Quality ▲ Commitment ▲ Client Service

TRIGON ASSOCIATES, LLC
1515 POYDRAS STREET
SUITE 2200
NEW ORLEANS, LA 70112
TEL: 504-585-5767

trigonassociates.com

TRIGON DWG. NO. IB-01

DR: SJ CLARK
CK: RA CASSANOVA
AP: LH NAGRATH
LAST EDIT:
SCALE: NOT TO SCALE
DATE: JANUARY 28, 2015

GENERAL SUPERINTENDENT

DWG. No. 12098-W8

SET NO:
SHEET NO: 68 OF 72

BP-001
POTABLE WATER BOOSTER PUMP

DESIGN: 500 GPM, 100 FT HEAD
MOTOR: 30 HP
ELECTRICAL: 3 PHASE, 208V, 60 Hz

TK-005
FOAM CONCENTRATE BLADDER TANK

DESIGN: 400 GALLONS
TYPE: ABOVE GROUND, HORIZONTAL BLADDER TANK

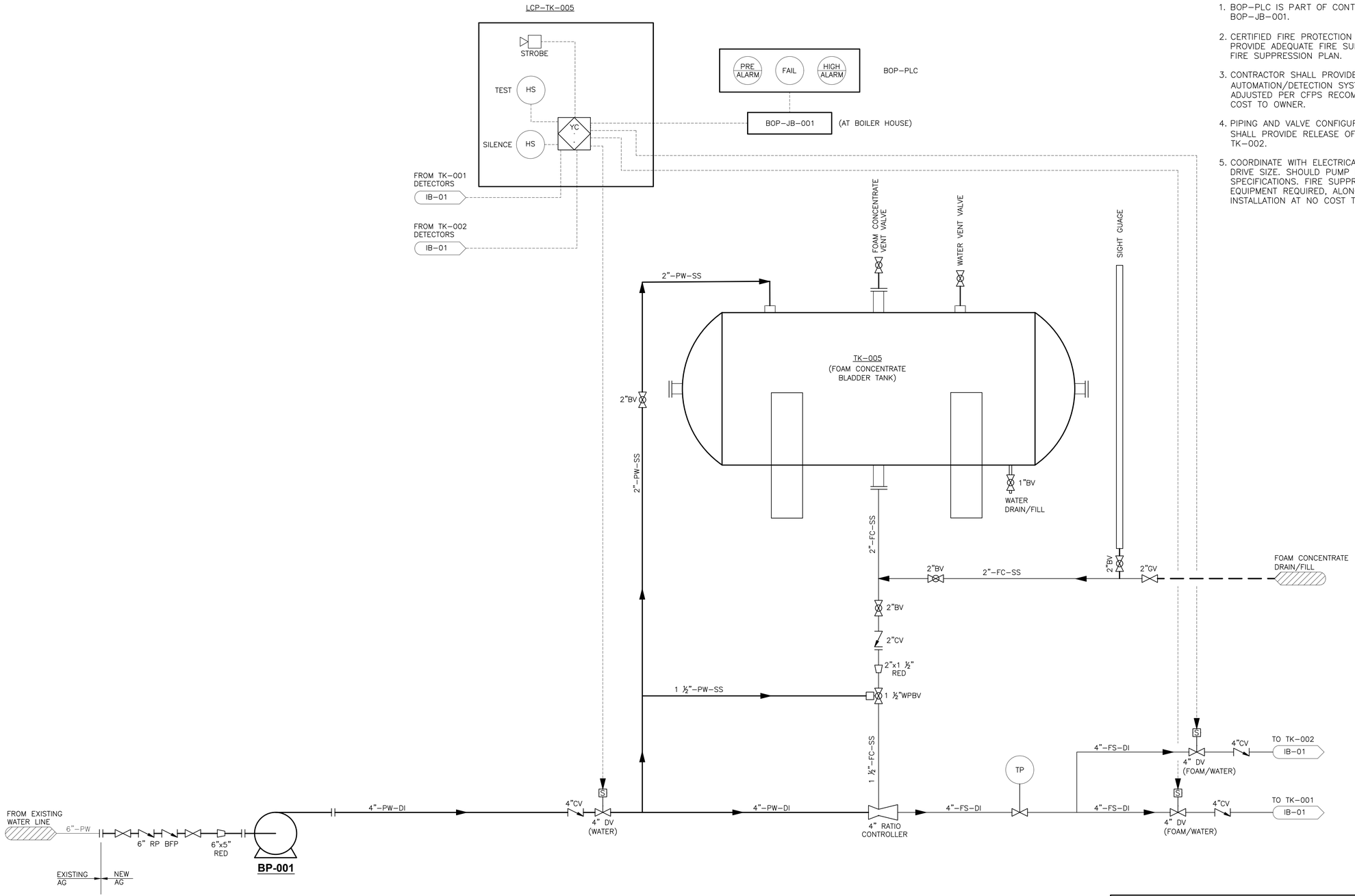

NOTES:

1. BOP–PLC IS PART OF CONTRACT CP–1370 WORK INCLUDING WIRING FROM BOP–JB–001.
2. CERTIFIED FIRE PROTECTION SPECIALIST (CFPS) SHALL VERIFY SIZING OF SYSTEM TO PROVIDE ADEQUATE FIRE SUPPRESSION COVERAGE FOR TK–001 AND TK–002. SUBMIT FIRE SUPPRESSION PLAN.
3. CONTRACTOR SHALL PROVIDE A COMPLETE FUNCTIONING FIRE SUPPRESSION AND AUTOMATION/DETECTION SYSTEM. LAYOUT AND SIZE OF PROPOSED SLAB SHALL BE ADJUSTED PER CFPS RECOMMENDATIONS AND MANUFACTURER REQUIREMENTS, AT NO COST TO OWNER.
4. PIPING AND VALVE CONFIGURATION SHALL BE THE RESPONSIBILITY OF THE CFPS AND SHALL PROVIDE RELEASE OF AFFF SOLUTION TO BOTH OR EITHER TK–001 AND/OR TK–002.
5. COORDINATE WITH ELECTRICAL ENGINEER ON ELECTRICAL REQUIREMENTS, INCLUDING VFD DRIVE SIZE. SHOULD PUMP HP VARY FROM SIZE SHOWN ON DRAWING AND LISTED IN SPECIFICATIONS. FIRE SUPPRESSION SUPPLIER SHALL BE RESPONSIBLE TO SUPPLY THE EQUIPMENT REQUIRED, ALONG WITH ASSOCIATED ELECTRICAL EQUIPMENT AND INSTALLATION AT NO COST TO OWNER.

A SEE SUL–0242 FOR ICFP AS–BUILTS

REV.	DATE	DESCRIPTION	BY
A	10–25–19	AS–BUILT MARKUPS	LHN

SEWERAGE AND WATER BOARD OF NEW ORLEANS

CONTRACT No. 1369

HMGP EMERGENCY FUEL STORAGE
RETROFIT POWER PLANT
MAIN WATER PURIFICATION PLANT POWER COMPLEX

FIRE SUPPRESSION (TK-005) P&ID

THIS DOCUMENT ORIGINALLY ISSUED AND SEALED BY LISBETH HABANS NAGRATH, LICENCE No. 36792 ON 2-6-15. THIS DOCUMENT SHOULD NOT BE CONSIDERED A CERTIFIED DOCUMENT.

Trigon
Quality ▲ Commitment ▲ Client Service

TRIGON ASSOCIATES, LLC
1515 POYDRAS STREET
SUITE 2200
NEW ORLEANS, LA 70112
TEL: 504-585-5767

trigonassociates.com

TRIGON DWG. NO. IB-02

DR: SJ CLARK
CK: RA CASSANOVA
AP: LH NAGRATH
LAST EDIT:
SCALE: NOT TO SCALE
DATE: JANUARY 28, 2015

GENERAL SUPERINTENDENT

DWG. No. 12098-W8

SET NO: SHEET NO: 69 OF 72

TK-004
OIL-WATER SEPARATOR

DESIGN: 400 GPM
TYPE: UNDERGROUND, HORIZONTAL

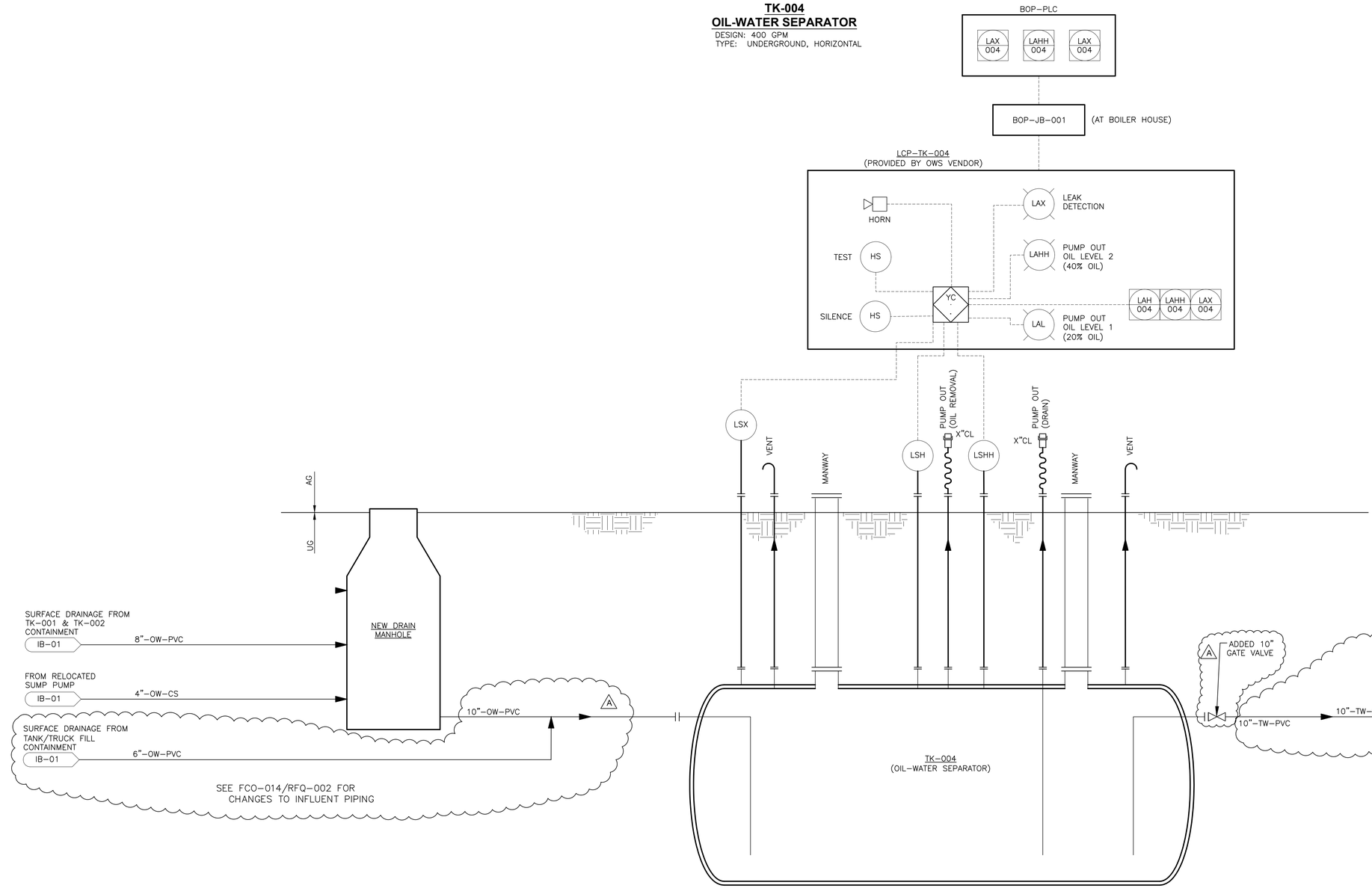

NOTES:

1. BOP–PLC IS PART OF CONTRACT CP–1370 WORK INCLUDING WIRING FROM BOP–JB–001.

REV.	DATE	DESCRIPTION	BY
A	10–25–19	AS–BUILT MARKUPS	LHN

SEWERAGE AND WATER BOARD OF NEW ORLEANS

CONTRACT No. 1369

HMGP EMERGENCY FUEL STORAGE
RETROFIT POWER PLANT
MAIN WATER PURIFICATION PLANT POWER COMPLEX

OIL-WATER SEPARATOR (TK-004)
P&ID

THIS DOCUMENT ORIGINALLY ISSUED AND SEALED BY LISBETH HABANS NAGRATH, LICENCE No. 36792 ON 2-6-15. THIS DOCUMENT SHOULD NOT BE CONSIDERED A CERTIFIED DOCUMENT.

Trigon
Quality ▲ Commitment ▲ Client Service

TRIGON ASSOCIATES, LLC
1515 POYDRAS STREET
SUITE 2200
NEW ORLEANS, LA 70112
TEL: 504-585-5767

trigonassociates.com

TRIGON DWG. NO. IB-03

DR:	SJ CLARK
CK:	RA CASSANOVA
AP:	LH NAGRATH
LAST EDIT:	
SCALE:	NOT TO SCALE
DATE:	JANUARY 28, 2015

GENERAL SUPERINTENDENT

DWG. No. 12098-W8

SET NO: SHEET NO: 70 OF 72

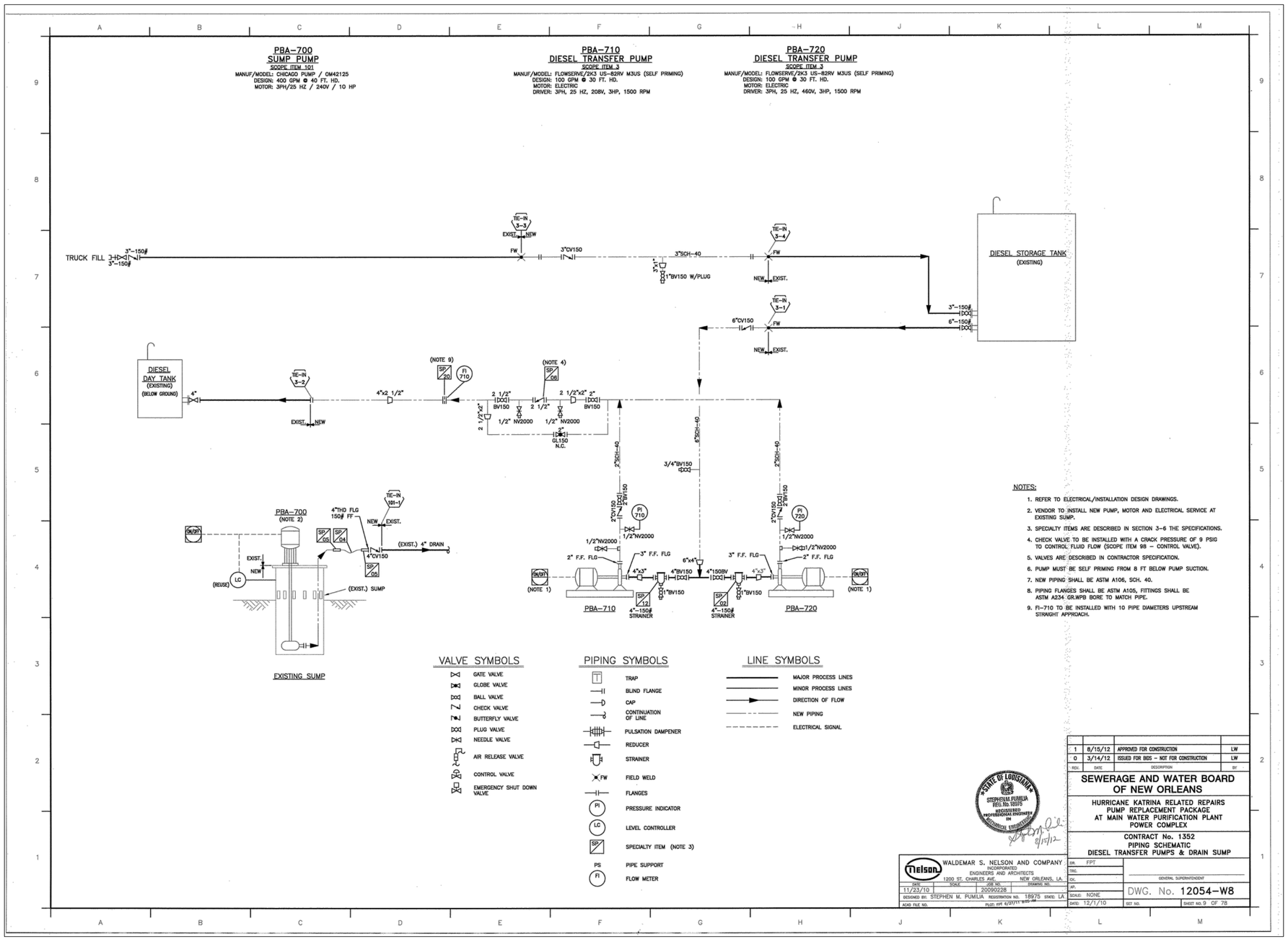

FOR REFERENCE ONLY

REV.	DATE	DESCRIPTION	BY
A	10–25–19	AS–BUILT MARKUPS	LHN

SEWERAGE AND WATER BOARD OF NEW ORLEANS

CONTRACT No. 1369

HMGP EMERGENCY FUEL STORAGE
RETROFIT POWER PLANT
MAIN WATER PURIFICATION PLANT POWER COMPLEX

CN 1352-PIPING SCHEMATIC-DIESEL TRANSFER PUMPS AND DRAIN SUMP

AS–BUILT REVISIONS NOT PROVIDED FOR THIS SHEET BY THE CONTRACTOR

THIS DOCUMENT ORIGINALLY ISSUED AND SEALED BY LISBETH HABANS NAGRATH, LICENCE No. 36792 ON 2-6-15. THIS DOCUMENT SHOULD NOT BE CONSIDERED A CERTIFIED DOCUMENT.

Trigon
Quality ▲ Commitment ▲ Client Service
TRIGON DWG. NO. IB-04

TRIGON ASSOCIATES, LLC
1515 POYDRAS STREET
SUITE 2200
NEW ORLEANS, LA 70112
TEL: 504-585-5767
trigonassociates.com

DR.	SJ CLARK
CK.	RA CASSANOVA
AP.	LH NAGRATH
LAST EDIT:	
SCALE:	NOT TO SCALE
DATE:	JANUARY 28, 2015

GENERAL SUPERINTENDENT

DWG. No. 12098-W8

SET NO: SHEET NO: 71 OF 72

FP-002
FUEL POLISHER

DESIGN: 10–90 GPM
MOTOR: 3 HP
ELECTRICAL: THREE PHASE, 480V, 60 Hz, 30 A

TK-003
EMERGENCY FUEL DAY TANK

DESIGN: 15,000 GALLONS
TYPE: ABOVE GROUND, VERTICAL

NOTES:

1. BOP–PLC IS PART OF CONTRACT CP–1370 WORK INCLUDING WIRING FROM BOP–JB–001.
2. PROVIDE NEEDLE VALVES AT BENDS IN ABOVE GRADE FUEL PIPING, NOT SHOWN AT ALL BENDS.

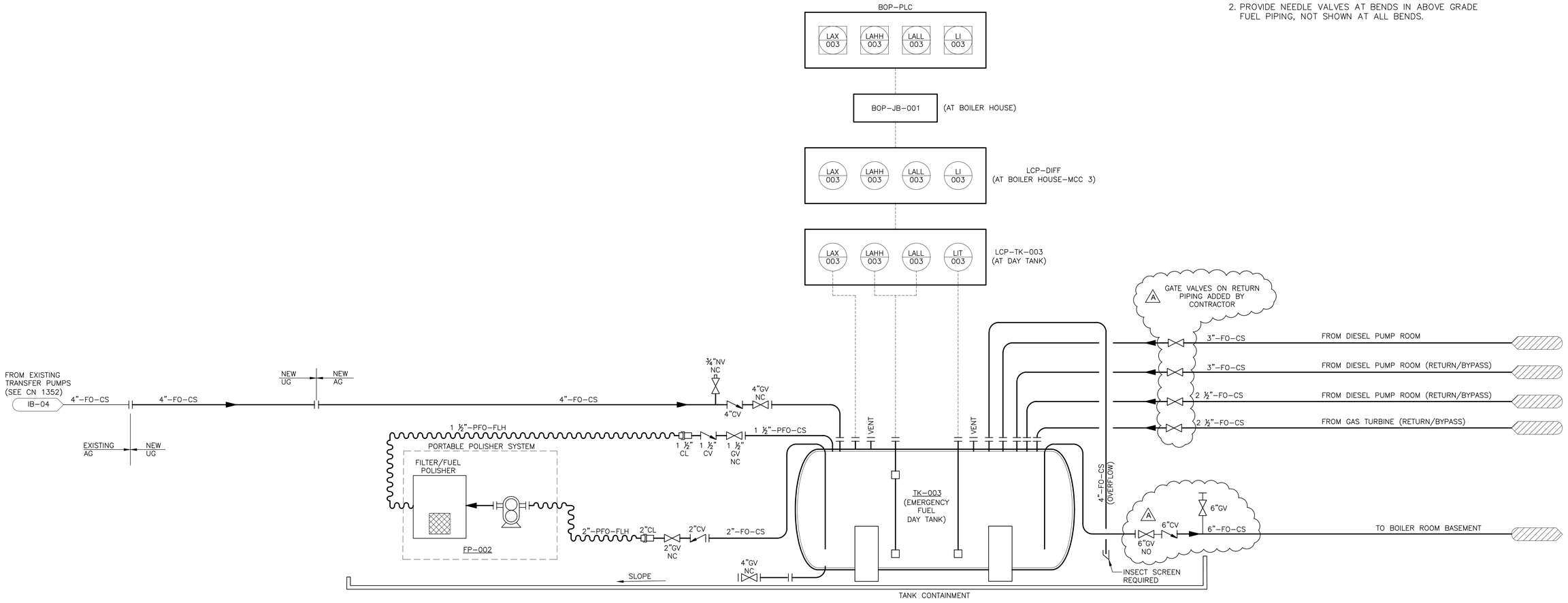

REV.	DATE	DESCRIPTION	BY
A	10–25–19	AS–BUILT MARKUPS	LHN

SEWERAGE AND WATER BOARD OF NEW ORLEANS

CONTRACT No. 1369

HMGP EMERGENCY FUEL STORAGE
RETROFIT POWER PLANT
MAIN WATER PURIFICATION PLANT POWER COMPLEX

DAY TANK (TK-003)
P&ID

THIS DOCUMENT ORIGINALLY ISSUED AND SEALED BY LISBETH HABANS NAGRATH, LICENCE No. 36792 ON 2-6-15. THIS DOCUMENT SHOULD NOT BE CONSIDERED A CERTIFIED DOCUMENT.

Trigon
Quality ▲ Commitment ▲ Client Service
TRIGON DWG. NO. IC-01

TRIGON ASSOCIATES, LLC
1515 POYDRAS STREET
SUITE 2200
NEW ORLEANS, LA 70112
TEL: 504-585-5767

trigonassociates.com

DR:	SJ CLARK
CK:	RA CASSANOVA
AP:	LH NAGRATH
LAST EDIT:	
SCALE:	NOT TO SCALE
DATE:	JANUARY 28, 2015

GENERAL SUPERINTENDENT

DWG. No. 12098-W8

SET NO: SHEET NO: 72 OF 72

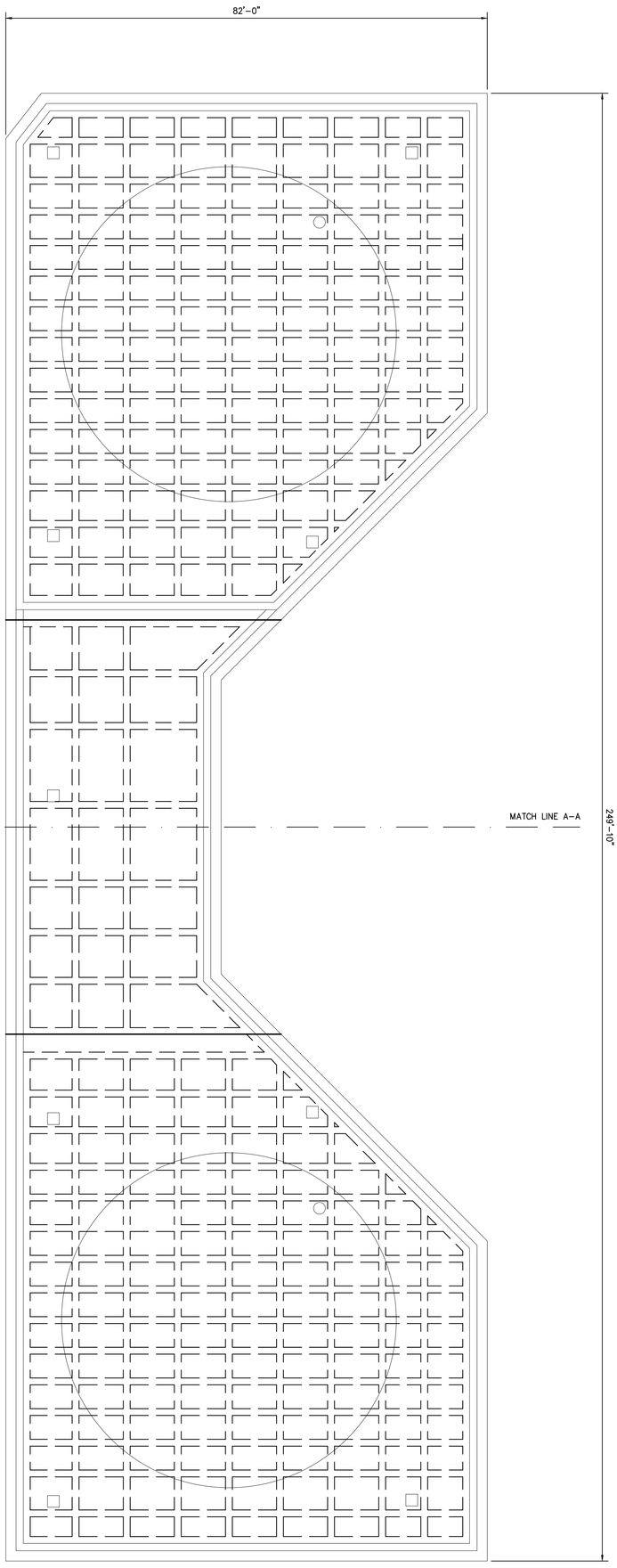

FOUNDATION PLAN
SCALE: 3/32"=1'-0"

APPENDIX

SEE VERSIONS OF SUL-0159 FOR VECP DESIGNED BY CARUBBA ENGINEERING

D:\Carubba\Standard Drawings\LIQUID\Sheet Logo.tif

DRAWN MD	NEW ORLEANS	RLH INVESTMENTS, LLC	LOUISIANA	3400 Hessmer Avenue Metairie,LA 70002 504.888.1490 Fax: 504.888.1491 www.carubbaengineering.com	
CHECKED RMC		SEWERAGE AND WATER BOARD OF NEW ORLEANS HMGP NO. 1369 STORAGE TANK FOUNDATIONS FOUNDATION PLAN			
DATE 8/23/16					
CEI PROJECT NO. 16-065					
SHEET S1.0					

MARK	DESCRIPTION	DATE	BY
A	FOR APPROVAL	8/23/16	RMC

ENLARGED FOUNDATION PLAN

SCALE: 3/16"=1'-0"

D:\Carubba\Standard Drawings\LOGOS\20thSeal Logo.tif

APPENDIX

SEE VERSIONS OF SUL-0159 FOR VECP DESIGNED BY CARUBBA ENGINEERING

MARK	DESCRIPTION	DATE	BY
4	REVISION	5/7/2019	RAH
3	REVISION	07/19/2017	
2	FOR CONSTRUCTION	07/05/2017	RMC
D	GENERAL REVISION	04/10/2017	RAH
C	FOR APPROVAL	11/21/2016	RMC
B	FOR APPROVAL	10/04/2016	RMC
A	FOR APPROVAL	8/23/16	RMC

3400 Hessmer Avenue
Metairie,LA
70002
Phone:
504.888.1490
FAX:
504.888.1491
www.carubbaengineering.com

NEW ORLEANS LOUISIANA

RLH INVESTMENTS, LLC

SEWERAGE AND WATER BOARD OF NEW ORLEANS
HMGP NO. 1369 STORAGE TANK FOUNDATIONS
FOUNDATION PLAN

DRAWN	MD
CHECKED	RMC
DATE	8/23/16
CEI PROJECT NO.	16-065
SHEET	S1.1

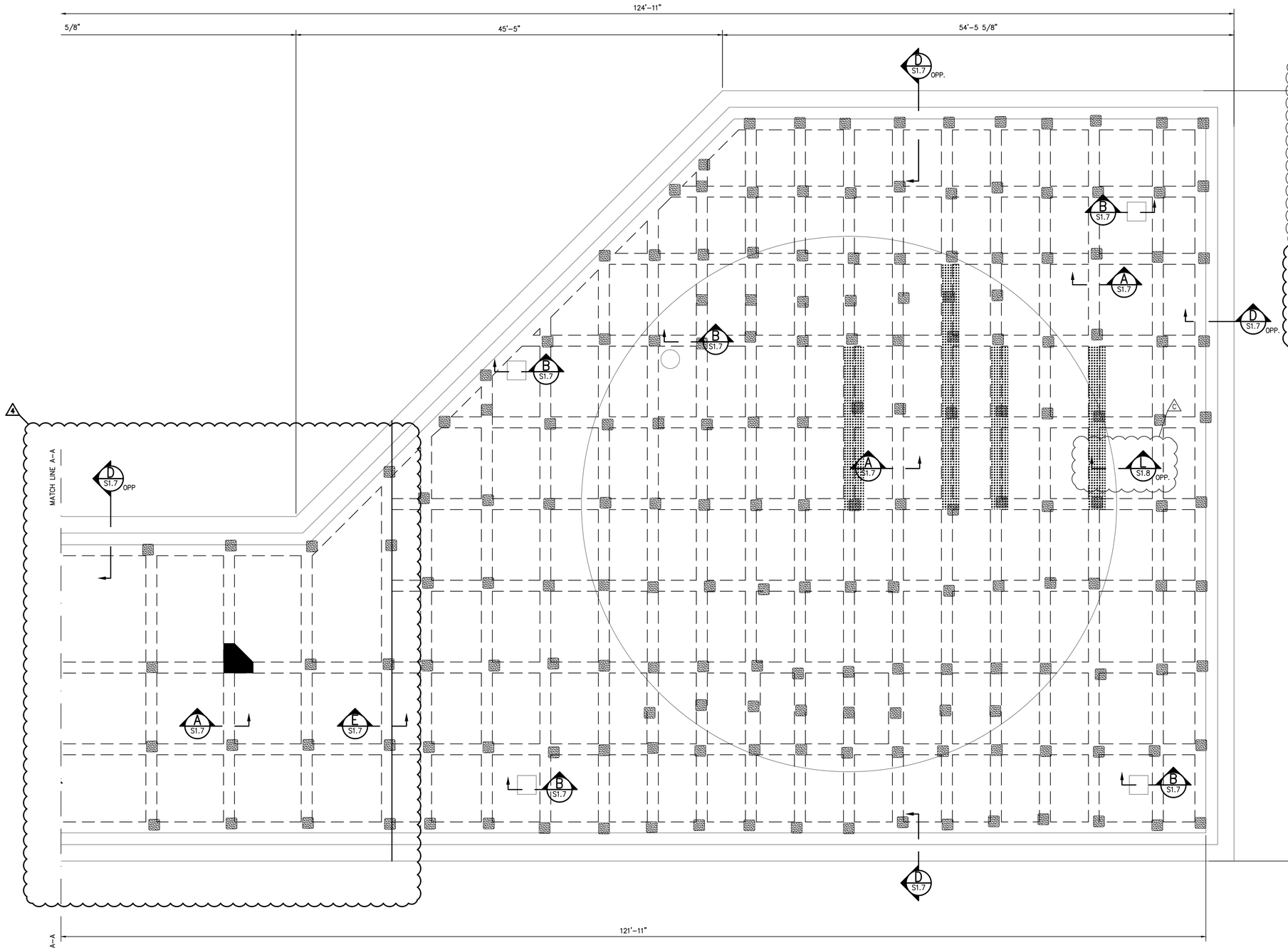

ENLARGED FOUNDATION PLAN

SCALE: 3/16"=1'-0"

NOTES

1. 15" SLAB MINIMUM (SEE S1.4 FOR SLOPES)
2. REINFORCEMENT: #8'S @ 18" O.C. E.W. TOP AND BOTTOM

LEGEND

EXISTING PRE-CAST CONCRETE PILES (BY OTHERS) (VERIFY LOCATION IN FIELD)

F.D. FIELD DETERMINE
V.I.F. VERIFY IN FIELD
V.W.A. VERIFY WITH ARCHITECT

WIDEN CONCRETE BEAM SO MINIMUM 3" CONCRETE COVER OVER PILE. FOR EVERY 3" OF ADDITIONAL WIDTH, ADD (1) ADDITIONAL #6 BAR CONTINUOUS T&B. TIE INTO EXISTING BEAM REINFORCEMENT AND OVERLAP MINIMUM 36"

CHAMFER CORNER OF CONCRETE BEAM 24" X 24" INSTALL (2) #6 BARS T&B

18
36
18

SEE VERSIONS OF SUL-0159 FOR VECP DESIGNED BY CARUBBA ENGINEERING

APPENDIX

D:\Carubba\Standard Drawings\LOGOS\20thSeal Logo.tif

MARK	DESCRIPTION	DATE	BY
4	REMISION	05/06/2019	RAH
E	FOR APPROVAL	02/04/2019	RAH
D	FOR APPROVAL	01/28/2019	RAH
C	FOR APPROVAL	11/21/2016	RMC
A	FOR APPROVAL	8/23/16	RMC

3400 Hessmer Avenue
Metairie,LA
70002
Phone:
504.888.1490
FAX:
504.888.1491
www.carubbaengineering.com
LOUISIANA
NEW ORLEANS

RLH INVESTMENTS, LLC

SEWERAGE AND WATER BOARD OF NEW ORLEANS
HMGP NO. 1369 STORAGE TANK FOUNDATIONS
FOUNDATION PLAN

DRAWN	MD
CHECKED	RMC
DATE	8/23/16
CEI PROJECT NO.	16-065
SHEET	S1.2

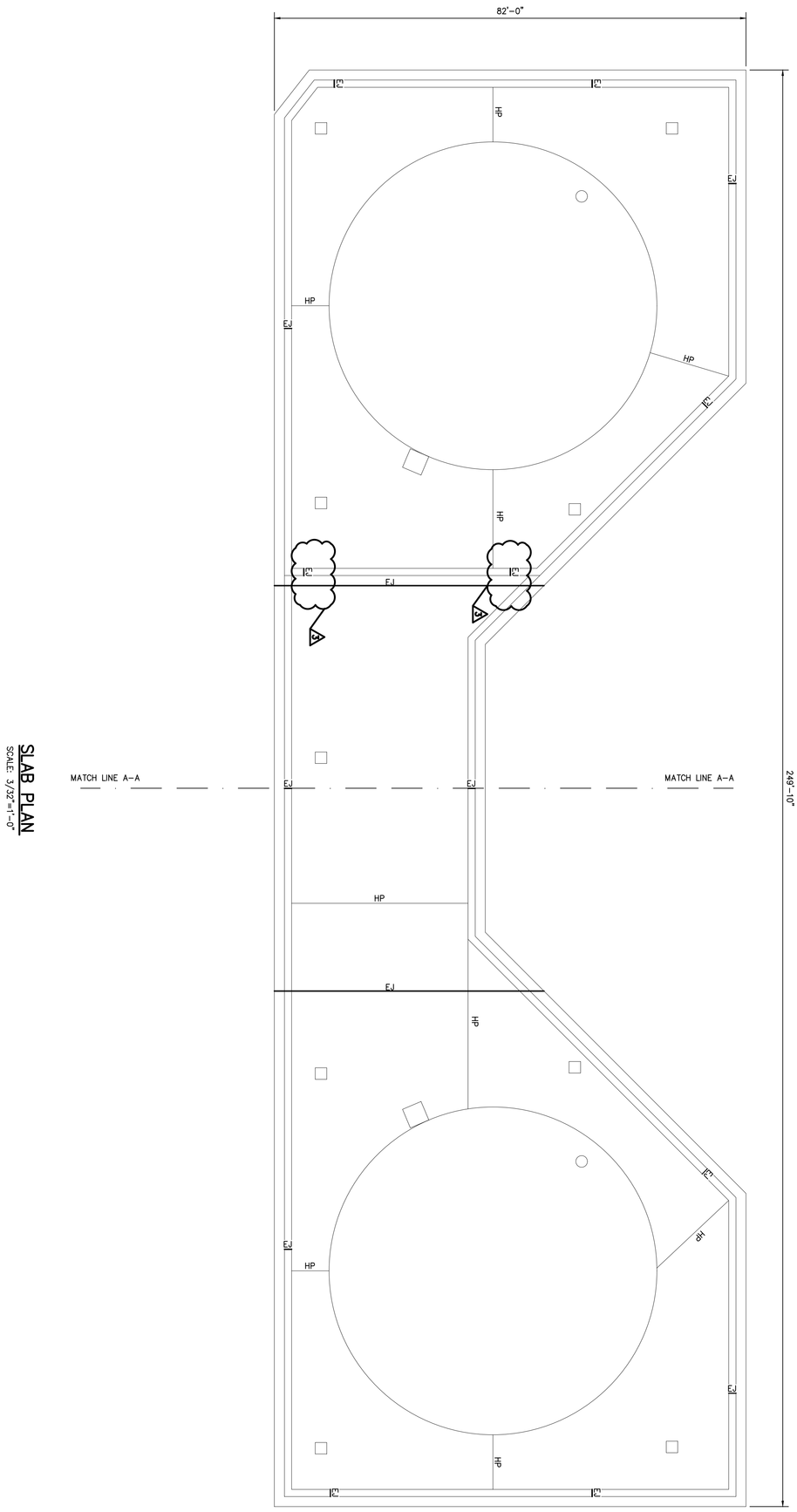

SLAB PLAN
SCALE: 3/32" =1'-0"

NOTES

1. SLAB AREA = 16,500 SQ. FT.

LEGEND

EJ EXPANSION JOINT (SEE DETAIL)
HP HIGH POINT

APPENDIX

SEE VERSIONS OF SUL-0159 FOR VECP DESIGNED BY CARUBBA ENGINEERING

D:\Carubba\Standard Drawings\LA\2015\SHEET Logo.tif

DRAWN	MD		
CHECKED	RMC		
DATE	8/23/16		
CEI PROJECT NO.	16-065		
SHEET	S1.3		

NEW ORLEANS — RLH INVESTMENTS, LLC — LOUISIANA

SEWERAGE AND WATER BOARD OF NEW ORLEANS
HMGP NO. 1369 STORAGE TANK FOUNDATIONS
SLAB PLAN

3400 Hessmer Avenue
Metairie,LA
70002
504.888.1490
Fax:
504.888.1491
www.carubbaengineering.com

MARK	DESCRIPTION	DATE	BY
3	REVISION	7/19/17	
A	FOR APPROVAL	8/23/16	RMC

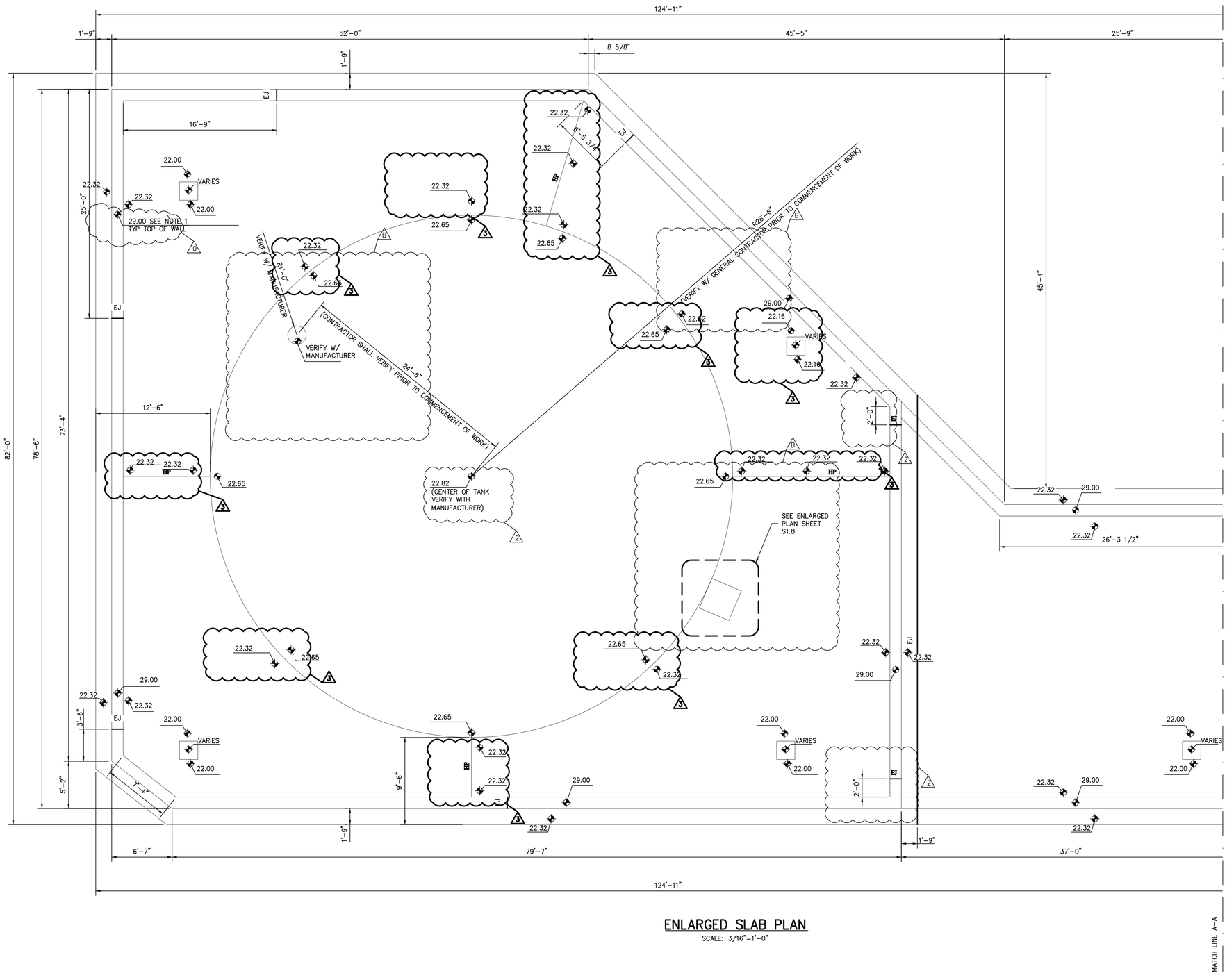

ENLARGED SLAB PLAN

SCALE: 3/16"=1'-0"

MATCH LINE A-A

0

NOTES

1. TOP OF WALL ELEVATION BASED OFF SECTION B/SB-02 DWG NO. 12098-W8
2. SLOPE CONCRETE FROM RIDGES TO EDGES FOR POSITIVE FALL TO SUMPS

LEGEND

HP HIGH POINT
EJ EXPANSION JOINT (SEE DETAIL)

MARK	DESCRIPTION	DATE	BY
3	REVISION	7/19/17	
2	FOR CONSTRUCTION	07/05/2017	RMC
B	FOR APPROVAL	11/17/16	RMC
A	FOR APPROVAL	8/23/16	RMC

APPENDIX

SEE VERSIONS OF SUL-0159 FOR VECP DESIGNED BY CARUBBA ENGINEERING

3400 Hessmer Avenue
Metairie,LA
70002
Phone:
504.888.1490
FAX:
504.888.1491
www.carubbaengineering.com
LOUISIANA
NEW ORLEANS

RLH INVESTMENTS, LLC

SEWERAGE AND WATER BOARD OF NEW ORLEANS
HMGP NO. 1369 STORAGE TANK FOUNDATIONS
SLAB PLAN

DRAWN	MD
CHECKED	RMC
DATE	8/23/16
CEI PROJECT NO.	16-065
SHEET	S1.4

D:\Carubba\Standard Drawings\LOGOS\20thSeal Logo.tif

1.

NOTES

SLOPE CONCRETE FROM RIDGES TO EDGES FOR POSITIVE FALL TO SUMPS

LEGEND

HP HIGH POINT
EJ EXPANSION JOINT (SEE DETAIL) 3

MATCH LINE A–A

124'–11"
25'–9" 45'–5" 52'–0" 1'–9"
8 5/8"
1'–9"
18'–0"
25'–0"
17'–3"
9'–9"
82'–0"
28'–3"
26'–3"
20'–0" 15'–3" 44'–11" 3'–9" 1'–9" 39'–3" 1'–9"

22.32 29.00 HP EJ
22.65
22.88 (CENTER OF TANK VERIFY WITH MANUFACTURER)
VERIFY W/ MANUFACTURER R1'–0" 45'–4"
(CONTRACTOR SHALL VERIFY PRIOR TO COMMENCEMENT OF WORK) 24'–6"
22.16 VARIES
22.00 VARIES
SEE ENLARGED PLAN SHEET S1.8 (OPP.)

MATCH LINE A–A

ENLARGED SLAB PLAN

SCALE: 3/16"=1'–0"

D:\Carubba\Standard Drawings\LOGOS\20thSeal Logo.tif

APPENDIX

SEE VECP VERSIONS OF SUL–0159 FOR VECP DESIGNED BY CARUBBA ENGINEERING

MARK	DESCRIPTION	DATE	BY
3	REVISION	7/19/17	RMC
2	FOR CONSTRUCTION	07/05/2017	RMC
B	FOR APPROVAL	11/17/16	RMC
A	FOR APPROVAL	8/23/16	RMC

3400 Hessmer Avenue
Metairie,LA
70002
Phone:
504.888.1490
FAX:
504.888.1491
www.carubbaengineering.com
LOUISIANA
NEW ORLEANS

RLH INVESTMENTS, LLC

SEWERAGE AND WATER BOARD OF NEW ORLEANS
HMGP NO. 1369 STORAGE TANK FOUNDATIONS
SLAB PLAN

DRAWN MD
CHECKED RMC
DATE 8/23/16
CEI PROJECT NO. 16–065
SHEET S1.5

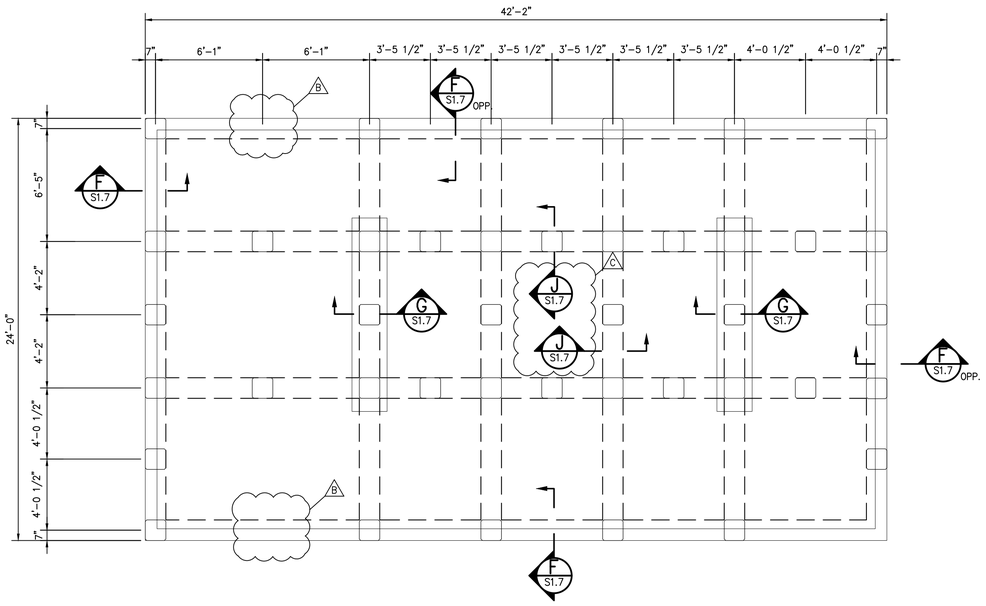

FOUNDATION PLAN–DAY TANK

SCALE: 1/4"=1'-0"

NOTES

1. SLAB AREA = 1,012 SQ. FT.
2. 12" SLAB TYP. U.N.O.
3. REINFORCEMENT: #8'S @ 18" O.C. E.W. TOP AND BOTTOM

LEGEND

☐	EXISTING PRE–CAST CONCRETE PILES (BY OTHERS) (VERIFY LOCATION IN FIELD)
F.D.	FIELD DETERMINE
V.I.F.	VERIFY IN FIELD
V.W.A.	VERIFY WITH ARCHITECT

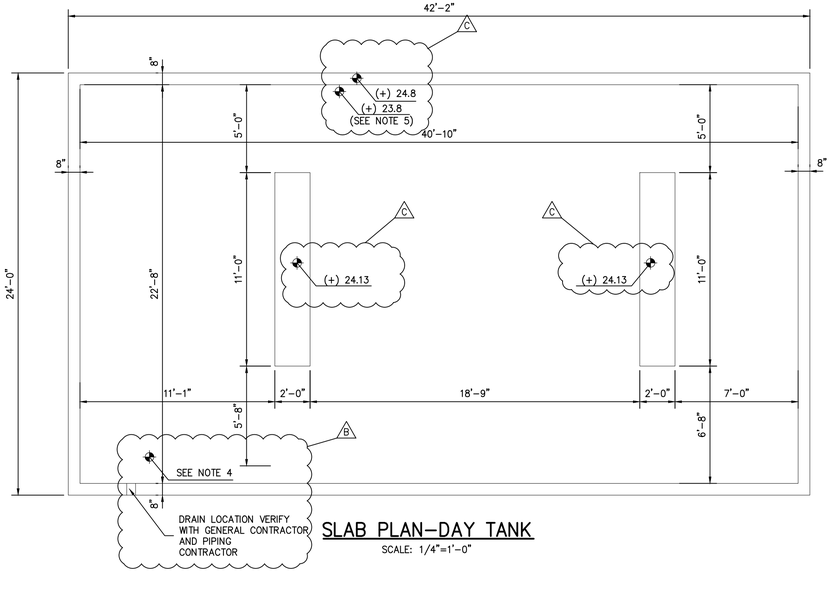

SLAB PLAN–DAY TANK

SCALE: 1/4"=1'-0"

NOTE:
4. SLOPE TO DRAIN PER PROJECT SPECIFICATIONS
5. VERIFY WITH PIPING CONTRACTOR

APPENDIX

SEE VERSIONS OF SUL–0159 FOR VECP DESIGNED BY CARUBBA ENGINEERING

D:\Carubba\Standard Drawings\LOGOS\20thSeal Logo.tif

MARK	DESCRIPTION	DATE	BY
C	FOR APPROVAL	11/21/2016	RMC
B	FOR APPROVAL	10/04/2016	RMC
A	FOR APPROVAL	8/23/16	RMC

3400 Hessmer Avenue
Metairie,LA
70002
Phone:
504.888.1490
FAX:
504.888.1491
www.carubbaengineering.com

RLH INVESTMENTS, LLC

SEWERAGE AND WATER BOARD OF NEW ORLEANS
HMGP NO. 1369 STORAGE TANK FOUNDATIONS
FOUNDATION PLAN DAY TANK

NEW ORLEANS LOUISIANA

DRAWN	MD
CHECKED	RMC
DATE	8/23/16
CEI PROJECT NO.	16–065
SHEET	S1.6